Summary Document ONLY

PLEASE BE AWARE THAT
THIS PDF FILE
CANNOT BE PRINTED

IT IS BROWSABLE ON-SCREEN ONLY AND IS PROVIDED FOR YOUR INFORMATION TO DECIDE WHETHER TO BECOME A PROSPECTIVE TENDERER ONLY

Note: This file may contain a brief scope statement, or an extract from the RFT documents, or a full exhibited copy – depending on the specific circumstances.

To participate in this tender process you MUST first download or order a full copy of the Request for Tender (RFT) documents, including the respondable components, and any addenda issued to date.

To do this return to the RFT web page on this web site and copy the RFT documents to your own computer or network – the blue "DOWNLOAD A SOFT COPY" link at the bottom provides access to the page from which you can do this.

NSW Department of Commerce

NSW Procurement – Contracting Services is a Business Unit of the NSW Department of Commerce

NSW Procurement – Contracting Services invites this tender for and on behalf of the NSW Government State Contracts Control Board

Request for Tender *0801890 - Solar Power Systems*

Period: Three (3) years with the option to extend for two (2) further periods each of up to 1 year in duration

Tender Issue Date: *13 October 2008*

Closing Date: *11 November 2008*

Closing Time: 9:30 am Sydney Time

COPYRIGHT

This Request for Tender document ("RFT") has been prepared by NSW Procurement – Contracting Services for the State Contracts Control Board for and on behalf of the Crown in right of the State of New South Wales. This RFT is protected by Crown copyright.

© State of New South Wales – NSW Procurement – Contracting Services, for and on behalf of the Crown in right of the State of New South Wales, 2001.

All rights reserved. No part of this RFT may be produced by any process, electronic or otherwise, in any material form or transmitted to any other person or stored electronically in any form, without the prior written permission of the State of New South Wales, except as permitted under the *Copyright Act 1968.*

For the purposes of this RFT, inquiries should be directed to the Contact Officer nominated in Part B of this RFT.

Other matters should be directed to:

Group General Manager
NSW Procurement – Contracting Services
NSW Department of Commerce
McKell Building
2-24 Rawson Place
Sydney NSW 2000
Tel: (02) 9372 7504
Fax: (02) 9372 7533

RFT NO. 0801890 - Solar Power Systems

REQUEST FOR TENDER - PART A – OVERVIEW 4

1 Outcome 4
2 Objectives 4
3 Required Benefits 4
4 Scope of RFT 4
5 RFT Structure 5
6 Best Price and Cost Structure 6
7 Benchmarking 6
8 Performance Framework 6
9 Electronic Business 7

REQUEST FOR TENDER - PART A – OVERVIEW

1 Outcome

This Request for Tender ("RFT") is made by the State Contracts Control Board (the "Board") for the provision of Solar Power Systems to the NSW Government under the proposed Agreement of the Services defined in the Statement of Requirements of this RFT.

The Board is responsible for the delivery of the tender process, assisted by NSW Procurement – Contracting Services, whilst the proposed Agreement will be executed between the State Contracts Control Board and the successful tenderer/s.

The key outcome of this RFT is to provide purchasing solution (through the proposed Agreement) for the required Services which meets the needs of the NSW Government.

2 Objectives

The objectives of the proposed Agreement in achieving the desired outcome, includes, but is not limited to the following:

(a) Reduce the total cost of the Services;

(b) Provide Services which are commercially competitive;

(c) Establish a sustainable partnership between the State Contracts Control Board and the successful tenderer to deliver quality Services;

(d) Best practice through continual review of delivery methods i.e value-engineering;

(e) Effective management of risks;

(f) Compliance with all applicable laws, standards, codes and policies.

(g) To drive automation in procurement for greater efficiency and information management.

3 Required Benefits

The required benefits to be achieved in delivering the objectives of the proposed Agreement are:

(a) A sustainable, mutually beneficial supply chain partnership;

(b) Savings and efficiency gains;

(c) Reduced costs to the NSW Government by value-engineering its delivery methods;

(d) Transparency of all transactions, including performance measurement, pricing and reporting;

(e) Expanded utilisation of electronic procurement across NSW Government to drive efficiency and transparency through systems such as smartbuy®, and e-tendering.

4 Scope of RFT

4.1 Services

Through this Request for Tender (RFT), the State Contracts Control Board is intending to implement a procurement arrangement for solar power systems for the NSW Government. A significant driver of this procurement will be the Australian Governments National Solar Schools Program (NSS).

A complete end to end solution for the provision of solar power systems including solar panels, associated equipment, installation, training and maintenance is sought. The solar power systems included in this RFT are:

- monocrystalline

- multicrystalline
- rigid amorphous and
- flexible amorphous

A detailed description of the Services is described in the Statement of Requirements (RFT, Part F).

Tenderers may tender for one or multiple regions.

4.2 Contract and Duration

It is envisaged that the term of the proposed Agreement will be of three (3) years, which may be extended for two (2) further periods each of up to one (1) year in duration at the discretion of the Principal.

4.3 NSW Government requirements

The successful tenderer must comply with NSW Government codes, guidelines and Standards listed in Schedule 1 of Part D.

5 RFT Structure

5.1 Interpretation

5.1.1 Definitions of terms used in Parts A to C are contained in clause 1 of Part B.

5.2 RFT Structure

This RFT comprises 6 Parts as follows:

- **Overview – Part A**

  It is an executive summary of main outcomes, objectives, requirements and expectations for this proposed Agreement and the Statement of Requirements. It provides the tenderer with the essential information to make an informed decision on whether to tender or not.

- **Conditions of Tender – Part B**

  It provides the terms, conditions and processes governing the tender phase of the RFT.

- **Tender Response – Part C**

  These are response schedules which are required by the Board to evaluate the tenderers' offers.

- **Agreement - Part D**

  This is the conditions of contract to be executed between the successful tenderer and the Principal.

- **Special Conditions – Part E**

  This contains the unique conditions specific to the proposed Agreement. It will form part of the Agreement to be executed between the successful tenderer/s and the Principal

- **Statement of Requirements – Part F**

  A detailed description of the Services to be provided by the successful tenderer/s including technical specification, service levels and performance framework. It will form part of the Agreement to be executed between the successful tenderer/s and the Principal.

If submitting a Tender, retain Parts A, B, D, E and F. Part C, once completed, forms the Tender, and is to be submitted in accordance with Parts A, B and D.

Part D and E, if applicable, are to be executed later by the successful Tenderer(s) and the Principal to form the Agreement.

6 Best Price and Cost Structure

Tenderers are encouraged to provide their best price(s) with their tender. Whilst the Board reserves the right to negotiate pre award, such negotiations may not occur and it is not the Board's preference.

It is important that tenderers realise that they may not be short-listed for further consideration, if they do not provide their best price with their initial tender.

This RFT seeks transparency in the tenderer's Cost Structure in the Tender Schedules (RFT, Part C) and is required to be fully completed by the tenderer to:

- Provide the Principal transparency of the tenderer's Cost Structure;
- Act as a basis for future Price variations, where applicable.

The Board expects the successful tenderer's to reduce its pricing during the term of the proposed Agreement by:

(a) Continually improving delivery processes to improve efficiency;

(b) Providing lower prices and discounts for large/bulk purchases;

(c) Passing on the benefit of rebates received from its own suppliers to the Principal;

(d) Matching prices as identified/recommended from the benchmarking process;

(e) Other methods of savings identified during the term of the proposed Agreement;

(f) Price matching as identified by the Principal.

(g) Presenting and adopting NSW government, or any other electronic procurement systems to reduce the cost of doing business with customers.

7 Benchmarking

Benchmarking with other suppliers within the market place may be the price-management mechanism under the proposed Agreement.

An independent benchmarking service provider may be engaged to compare prices of the Services with other comparable products available in the market place. The benchmarking service provider will be mutually agreed by the Board and successful tenderer/s.

Benchmarking may be undertaken by the benchmarking service provider after the first anniversary of the proposed Agreement and at 12 monthly intervals thereafter.

8 Performance Framework

The Board is committed to engaging contractors who are able and willing to continually improve their performance during the term of the proposed Agreement.

The performance framework within the proposed Agreement provides both incentives for good performance and sanctions for poor performance.

Performance incentives and sanctions are based on the Contractor's performance. Schedule 7 to Part D describes the performance framework in detail and the measurement/targets of all performance indicators.

Typical incentives and sanctions that may be used by the Principal include, but are not limited to :

(a) Additional or reduced performance reporting requirements;

(b) Temporary suspension of all or parts of a proposed Agreement for a period not exceeding 12 months;

(c) Scope variation ie. inclusion of additional Services/reduction;

(d) Extensions of the proposed Agreement (if available);

(e) Non payment of price variations.

9 Electronic Business

The use of electronic commerce is a mandatory requirement under this Agreement. Further details are included in the sample Agreement (RFT, Part D) and the Statement of Requirements (RFT, Part F)

The use of NSW government electronic procurement systems (smartbuy®, i-Tenders and NSW e-tendering, etc) is a mandatory requirement under this Agreement. Tenders are encouraged to present similar electronic solutions that can further support expanding adoption of electronic procurement by NSW government agencies and their suppliers.

Agreement No: 0801890 - Solar Power Systems

PART B Conditions of Tender 1

1 Definitions 1
2 Tender Preparation 2
3 Eligibility to Tender 2
4 Tender Process 3
5 Evaluation Process 8
6 Method of Acceptance 11
7 Disclosure Information 11
8 Complaints Procedure 11

ANNEXURE 1 TO PART B (Disclosure of Information) 12

PART B Conditions of Tender

1 Definitions

Unless the context indicates otherwise, the following terms, where used in Parts A-C of this RFT, shall have the meanings set out below.

"ABN" means an Australian Business Number as provided in GST law.

"Addendum" means an addition to this RFT made by the Board before Closing Date and Closing Time.

"Agreement" means the proposed agreement to be made between the Principal and the Contractor in the form of Part D (and Part E if applicable) to this RFT.

"Alternative Tender" A Non-Conforming Tender that is intended to offer a different method of meeting the object and intent of the requirement.

"Board" The State Contracts Control Board established under the Public Sector Employment and Management Act 2002 whose responsibilities include:

(a) Inviting and accepting tenders;

(b) Determining the conditions under which tenders are invited or accepted;

(c) Entering into contracts on behalf of the Crown in right of the State of New South Wales; and

(d) On-going contract administration and management, and includes the duly authorised delegates of the Board, including officers of NSW Procurement – Contracting Services.

"Closing Date and Closing Time" means the Closing Date and Closing Time for receipt of tenders specified in the cover sheet of this RFT.

"Code" means the NSW Government Code of Practice for Procurement as amended from time to time, together with any other codes of practice relating to procurement, including any amendments to such codes that may be applicable to the particular RFT. The Code can be viewed and downloaded from: *http://www.treasury.nsw.gov.au/__data/assets/pdf_file/0015/1356/code_of_prac-curr.pdf*

"Conforming Tender" means a tender that conforms in all material aspects to:

(a) the Statement of Requirements;

(b) the terms and conditions of Part D, and Part E if applicable.

(c) other parts of this RFT, and

(d) is in the prescribed form.

"Contractor" means a tenderer who has entered into an Agreement with the Principal.

"Cost Structure" means the individual tenderer's cost breakdown in accordance with the number of categories specified in Part C. Such breakdown must equate to 100% of the tenderer's cost for the supply of the Deliverables.

"Deliverables" means the goods and associated services, the Works sought under this RFT, as detailed in the Statement of Requirements.

"GST" means a goods and services tax and has the same meaning as in the GST Law.

"GST Law" means any law imposing a GST And includes A New Tax System (Goods & Services Tax) Act 1999 (C'th) or if that Act does not exist, means any Act imposing, or relating to a GST and any regulation made under those Acts.

"GST Free Supplies" and "Input Taxed Supplies" have the same meaning as in the GST Law.

"Non-Conforming Tender" means a tender that does not conform in all material aspects to:

(a) the Statement of Requirements;

(b) the terms and conditions of Part D, and Part E if applicable;

(c) other Parts of this RFT;

(d) is not in the prescribed form.

"NSW Procurement - Contracting Services" A business unit of the NSW Department of Commerce representing the Board and authorised to arrange and administer contracts on behalf of the Board.

"Principal" means the party executing the proposed Agreement with the successful tenderer.

"Statement of Requirements" means the detailed description of the Deliverables contained in Part F.

"State Contracts Control Board" is the Board.

2 Tender Preparation

2.1 Tenderer to inform itself

Before submitting its tender, a tenderer must:

2.1.2 Examine all information relevant to the risks and contingencies and other circumstances having an effect on its Tender; and

2.1.3 Satisfy itself:

(a) that the tender, including the tender price is correct; and

(b) that it is financially and practically viable for it to enter into and perform the proposed Agreement.

2.2 Information Supplied in Part F

The information contained in Part F has been provided with due care for the tenderer's guidance, but is not guaranteed as being completely accurate. The Board shall not be held liable for any errors or omissions contained in Part F.

3 Eligibility to Tender

3.1 Legal Entity of Tenderer

3.1.1 Tenders must be submitted by a legal entity or, if a joint tender, by legal entities, with the capacity to contract. The Principal will only enter into an Agreement with such legal entity or entities.

3.1.2 The Board may ask a tenderer to provide evidence of its legal status or capacity to contract. If tenders from entities propose to contract in their capacity as trustees, such evidence may include copies of the relevant trust deeds. Any evidence requested is to be provided within 3 working days of the request.

3.2 Financial Capability of Tenderer

3.2.1 The Board reserves the right to reject any tender if the Board judges the tenderer not to have appropriate financial capability.

3.2.2 Where the Board forms the view that the tenderer does not have the appropriate financial capability, the Board reserves the right to make acceptance of any tender conditional upon the tenderer entering into a bank, parent company or personal

guarantee, or an unconditional performance bond in a form satisfactory to the Board.

3.3 ABN Requirements

3.3.1 The Principal will not enter into an Agreement with a company that does not have an Australian Business Number and is not registered for GST. Normally, tenderers must be registered for GST and state their ABN in their tender.

3.3.2 Tenders from tenderers that do not have an ABN and/or are not registered for GST, such as tenderers commencing business in Australia, may be considered at the Board's discretion if the tenderer demonstrates that it will obtain an ABN and GST registration before entering into an Agreement with the Principal. Such tenderers must state how and when they intend to obtain an ABN and register for GST in their tender response.

4 Tender Process

4.1 Provisional RFT Program

Given below is the Board's provisional RFT program. The Board may, at its absolute discretion, amend the provisional RFT program.

Milestone	Estimated Date
RFT issue	13/10/08
Tenderer briefing	22/10/08
RFT Close Date	5/11/08
Execution of Agreement	10/12/08
Commencement of supply of Services	1/1/09

4.2 Tenderer Briefing

4.2.1 A tenderer briefing will be held on the date, time, and place, indicated below. The contact officer/s of NSW Procurement – will be available at that time to answer any queries regarding this RFT and the tender process generally. Names of persons attending the tenderer briefing must be provided to the contact officer 3 working days prior to the date. No more than 2 persons from each tenderer will be permitted to attend the tenderer briefing.

Location: NSW Department of Education and Training
Annex, Level 7
35 Bridge Street
Sydney

Date: Wednesday 22 October 2008

Time: 10:00am

4.3 Contact Officer

4.3.1 Tenderers should refer requests for information or advice regarding this RFT to:

Name: Angela Burrell
Telephone: 02 9372 7509
Facsimile: 02 9372 7633
E-mail: *angela.burrell@commerce.nsw.gov.au*

4.3.2 Any information given to a tenderer to clarify any aspect of this RFT will also be given to all other tenderers if in the Board's opinion the information would unfairly favour the inquiring tenderer over other tenderers.

4.4 Conformity of Tenders

4.4.1 The Board seeks Conforming Tenders.

4.4.2 Non-Conforming Tenders may be excluded from the tender process without further consideration at the Board's discretion.

4.5 Alternative Tenders

4.5.1 Tenderers may, if they choose, submit an Alternative Tender. Alternative Tenders will only be considered if submitted in conjunction with a Conforming Tender. An Alternative Tender must be clearly marked "Alternative Tender".

4.6 Submission of Tenders

4.6.1 Prices, responses and other information provided in the tender are to be in writing and in English.

4.6.2 Tenderers must complete all of Part C of this RFT, as directed and must not amend any of the questions provided.

4.6.3 Tenderers should notify the contact officer in writing on or before the Closing Date and Closing Time if they find any discrepancy, error or omission in this RFT.

All tenders must be provided in electronic or hard copy.

4.6.4 Tenderers must ensure that all excel or word attachments can be opened and viewed by Microsoft Excel 2003 or Microsoft Word 2003. Other formats for the attachments are only to be submitted if an arrangement has first been made with the contact officer prior to lodgment of the tender.

4.6.5 It is recommended that electronic files be kept as small as practical and the lodgement files below an optimum size of 7 MB, as the limitations of the Internet and communications may affect the successful transmittal and receipt of large files.

4.7 Tender Lodgement

4.7.1 Tenders must be fully received by the Closing Date and Closing Time.

4.7.2 A Tender must be lodged into the designated secure tender box/es, and must be submitted electronically to the electronic tender box for this RFT via the NSW Department of Commerce tenders website at: *https://tenders.nsw.gov.au/commerce* (Login in as a system user, locate the web page for this RFT, and follow the on screen instructions to lodge the tender).

4.7.3 The lodgement can only be made by a registered system user of the NSW Government eTendering system.

4.7.4 Hard Copy or Facsimile Lodgement

(a) Delivery into the Physical Tender Box at:

Tender Box

NSW Department of Commerce

Level 3 McKell Building (Ground floor west)

2-24 Rawson Place Sydney NSW

(b) The tender must be able to be lodged into the physical tender box deposit slot of 400mm by 90mm, and must be lodged during normal McKell Building opening hours of 7:30am to 6:30pm Monday to Friday (excluding Public Holidays).

(c) No receipt can be given however written acknowledgement of delivery of a container may be given by prior arrangement. Contact Tenders Office on (02) 9372 8900.

(d) If the tender is larger in physical size and cannot be broken down, or delivery personnel require a signature as evidence of delivery the tender must be delivered between 8:30am and 4:30pm Monday to Friday (excluding Public Holidays) and only by prior arrangement. Contact Tenders Office on (02) 9372 8900. Commerce personnel will not take delivery of containers that present an OH&S risk in terms of size or weight.

(e) Tenders must be clearly marked with the RFT number – "0801890".

Or Lodgement to the Facsimile Tender Box at Ph: (02) 9372 8974 :

Tenders which are sent by facsimile and which are not completely received at the specified location by the close of tenders may be excluded from consideration for acceptance even if transmission or receipt is delayed due to the receiving facsimile machine being engaged, faulty or otherwise inoperative.

If a tenderer intends to submit by facsimile it must consider the following:

The facsimile machine only allows one tender to be lodged at a time and is at its peak on the morning when tenders and tenders close. Due to the volume received on those closing dates, the State Contracts Control Board (SCCB) cannot guarantee the level or speed of access to these facilities at that time and tenderers should consider lodging in good time having regard to this

4.8 Electronic Tenders

4.8.1 A tender submitted electronically will be treated in accordance with the *Electronic Transactions Act 2000* (NSW).

4.8.2 A tenderer, by electronically lodging a tender, is taken to have accepted conditions shown in the conditions and rules on the NSW Department of Commerce tenders website at *https://tenders.nsw.gov.au/commerce*.

4.8.3 A tenderer must follow the following directions:

(a) A RFT for which electronic lodgement is available through the website can be identified by the blue "Lodge a Response" link on the web pages for the RFT.

(b) To lodge a tender electronically, the files containing the tenderer's response must be up-loaded through the website to the NSW Government eTendering system. Access to the up-loading process is through the blue "Lodge a Response" link, then following the steps and instructions on the NSW Department of Commerce tenders website and any instructions which may have been supplied with the RFT documents, advertisement or invitation.

4.8.4 A tenderer must observe the following format for lodgements:

(a) An electronically lodged tender must be lodged in a file format required by the RFT.

(b) If a tenderer compresses files, it must be possible to decompress them using WinZip. A tenderer must not submit self-extracting (*exe) zip files.

(c) A tenderer must not change pre-existing text in the RFT other than to insert the required information.

(d) The file/s name/s must have an extension and not have invalid characters or file names/loading path names too long for the system, as detailed on the NSW Department of Commerce tenders website.

4.8.5 Signatures are not required for an electronic tender. A tenderer must ensure that a tender response is authorised by the person or persons who may do so on behalf of the tenderer and appropriately identify the person and indicate the person's approval of the information communicated.

4.8.6 Electronically submitted tenders may be made corrupt or incomplete, for example by computer viruses. The Board may decline to consider for acceptance a tender that cannot be effectively evaluated because it is incomplete or corrupt. Tenderers must note that:

(a) To reduce the likelihood of viruses, a tenderer must not include any macros, applets, or executable code or files in a tender response.

(b) A tenderer should ensure that electronically submitted files are free from viruses by checking the files with an up to date virus-checking program before submission.

4.8.7 If a tenderer experiences any persistent difficulty with the NSW Department of Commerce tenders website in submitting a tender or otherwise, it is encouraged to advise the contact officer promptly in writing.

(a) If there is an extended defect or failure of the NSW Department of Commerce tenders website or eTendering system and the Board is advised, the tender Closing Date and Closing Time may be extended provided that, in the view of the Board, the RFT process will not be compromised by such an extension.

(b) Tenders must be fully received by the Closing Date and Closing Time.

4.8.8 Tenderers may break down the lodgement of large tenders into smaller packages if clearly identified e.g. package 1 of 3; 2 of 3; 3 of 3.

4.8.9 If a tenderer provides multiple lodgements, the latest tender received will be the tender to be evaluated unless the tenderer provides clear directions to whether the lodgement is:

(a) an alternative tender,

(b) supporting information

(c) a further part of a tender that has had previous lodgement

4.9 Tender Validity Period

4.9.1 The Tender will remain open for acceptance by the Principal for a period of six (6). months from the Closing Date and Closing Time for tenders.

4.10 Late Tenders

4.10.1 Late tenders should not be considered, except where the Board is satisfied that the integrity and competitiveness of the tendering process has not been compromised. The Board shall not penalise any supplier whose tender is received late if the delay is due solely to mishandling by the Board.

4.11 Extension of Closing Date and Closing Time

4.11.1 The Board may, in its discretion, extend the Closing Date and Closing Time.

4.12 Corruption or Unethical Conduct

4.12.1 Tenderers must comply with the requirements of the Commerce Business Ethics Statement, which is available at the link below and must disclose any conflicts of interests in Part C.

4.12.2 If a tenderer, or any of its officers, employees, agents or sub-contractors is found to have:

(a) offered any inducement or reward to any public servant or employee, agent or subcontractor of the Board, the Principal, or the NSW Government in connection with this RFT or the submitted Tender;

(b) committed corrupt conduct in the meaning of the Independent Commission Against Corruption Act 1988;

(c) a record or alleged record of unethical behaviour; or not complied with the requirements of Commerce Business Ethics Statement available at:

http://www.commerce.nsw.gov.au/About+Commerce/Business+ethics+statement/Business+ethics+statement.htm;

this may result in the tender not receiving further consideration.

4.12.3 The Board may, in its discretion, invite a relevant tenderer to provide written comments within a specified time before the Board excludes the tenderer on this basis.

4.12.4 If the Board and/or the Principal becomes aware of improper conflict of interests by a successful tenderer after an Agreement has been executed, then the Principal reserves the right to terminate the Agreement.

4.13 Code of Practice for Procurement

4.13.1 In submitting its tender, the tenderer signifies agreement to comply with the Code.

4.13.2 Failure to comply with the Code may be taken into account by the Board when considering the tenderer's tender or any subsequent tender, and may result in the tender being passed over.

4.14 Prescribed Form of Tender

4.14.1 The Tender, including any Alternative Tender, must comprise a completed Part C and any attachments to Part C, as may be necessary. Any attachments should be labelled to identify those clauses of the RFT to which they relate.

4.14.2 The Tender will be taken to be for the provision of the Services on the terms and conditions stated in Part D (and Part E if applicable) except to the extent that these are amended by the Tender and agreed by the Principal.

4.15 Addenda to RFT

4.15.1 If, for any reason the Board, at its sole discretion, requires the RFT to be amended before the Closing Date and Closing Time, an Addendum will be issued.

4.15.2 In each case, an Addendum becomes part of the RFT.

4.15.3 The Board, during the tender period may issue Addenda altering the RFT. In such cases, it is the obligation of the tenderer to verify if any Addenda were issued prior to closing date, even if a tender has already been submitted.

4.15.4 Tenderers must check the web site address, *https://tenders.nsw.gov.au/commerce* and download the Addendum.

4.16 Tenderer's Costs

The tenderer acknowledges that the Board will not be liable to it for any expenses or costs incurred by it as a result of its participation in this RFT, including where the RFT has been discontinued.

4.17 Custody of Tenders after Receipt

4.17.1 Tenders lodged electronically to the NSW Department of Commerce Tenders website will be treated in accordance with the *Electronic Transactions Act 2000.*

4.17.2 On receipt of tenders lodged electronically to the NSW Government eTendering system, tenders are encrypted and stored in a secure "electronic tender box."

4.17.3 For reasons of probity and security, the Board and its agent are prevented from interrogating the electronic tender box to ascertain whether tenders have been received or for any reason, until after the Closing Date and Closing Time.

4.17.4 The e-mail receipt that is sent to system user lodging the tender after successfully lodging the tender electronically to the NSW Government eTendering system is the only evidence of tender lodgement provided.

4.18 Ownership of Tenders

4.18.1 All tenders become the property of the Board on submission.

4.18.2 The Board may make copies of the tenders for any purpose related to this RFT.

4.19 Discontinuance of Tender Process

4.19.1 Where the Board determines that awarding a contract would not be in the public interest, the Board reserves the right to discontinue the tender process at any point, without making a determination regarding acceptance or rejection of Tenders.

4.20 Variations to Tenders

4.20.1 At any time after the Closing Date of tenders and before the Board accepts any tender received in response to this RFT, a tenderer may, subject to clause 4.20.2, vary its tenders:

(a) by providing the Board with further information by way of explanation or clarification;

(b) by correcting a mistake or anomaly; or

(c) by documenting agreed changes to the tender negotiated under clause 5.5 of this Part B.

4.20.2 Such a variation may be made either:

(a) at the request of the Board, or

(b) with the consent of the Board at the request of the tenderer; but only if,

(i) in the case of variation requested by the tenderer under clause 4.20.1(a)-(b), it appears to the Board reasonable in the circumstances to allow the tenderer to provide the information or correct the mistake or anomaly; or

(ii) in the case of variation under clause 4.20.1(c) the Board has confirmed that the draft-documented changes reflect what has been agreed.

4.20.3 If a tender is varied in accordance with clause 4.20.1(a) or (b), the Board will provide all other tenderers whose tenders have similar characteristics with the opportunity of varying their tenders in a similar way.

4.20.4 A variation of a tender under clause 4.20.1 will not be permitted if in the Board's view:

(a) it would substantially alter the original tender; or

(b) in the case of variation under clause 4.20.1(a) or (b), it would result in the revising or expanding of a tender in a way that would give a tenderer an unfair advantage over other tenderers.

5 Evaluation Process

5.1.1 Tenders will be assessed against the evaluation criteria listed below which are not indicated in order of significance or be given equal weight.

5.1.2 The evaluation criteria for this RFT that do not relate to price will account for 40% of the total evaluation score. The evaluation for this RFT that relate to price for a complete solar power systems will account for *60%* of the total evaluation score.

5.1.3 Information supplied by the tenderer in Part C will contribute to the assessment against each criterion. Tenderers are advised to respond clearly to all the evaluation criteria listed in this RFT.

5.1.4 Tenders that do not include a fully completed Part C, in particular those tenders which do not contain sufficient information to permit a proper evaluation to be conducted, or electronic tenders that cannot be effectively evaluated because the file has become corrupt, may be excluded from the tender process without further consideration at the Board's discretion.

5.1.5 The Board may assess an Alternative Tender against the evaluation criteria where submitted with a Conforming Tender.

5.2 Evaluation Criteria

The evaluation criteria for this RFT (which include but are not limited to) are:

(a) Fitness for purpose including:

- (i) Quality, of product design;
- (ii) range of products
- (iii) innovative aspects;
- (iv) performance;
- (v) warranties
- (vi) Maintenance
- (vii) Ease of use of system in an educational environment;

(b) Price;

(c) Delivery requirements;

(d) Capacity to perform the Agreement including:

- (i) Production/technical capacity;
- (ii) Ability to provide an end to end solution
- (iii) Human resource capacity, qualifications, skills and experience;
- (iv) Financial capacity and stability (including security considerations);
- (v) Maintenance and support service levels including availability of help desk for repair and help calls;
- (vi) Quality assurance systems
- (vii) Suitability of sub-contractors;
- (viii) Previous experience and performance on similar agreements for the products and services covered in this RFT or other products and services;
- (ix) Record of ethical behaviour in service delivery;
- (x) Referee Reports
- (xi) Compliance with other requirements of the Principal, (including ability to market the proposed Agreement).

(e) Compliance with the proposed conditions of Part D, and E if applicable.

(f) Compliance with NSW Government procurement policy and other applicable NSW Government policies, including:

Industry impact and local industry participation plan;

SME involvement;

Regional development activity;

Workforce development;

Compliance with OHS&R requirements;

Compliance with NSW Government Environmental Management

Systems Guidelines:

(g) Compliance with relevant legislation and standards.

(h) Capacity and capability to facilitate electronic commerce through smartbuy®

(i) Compliance with the Statement of Requirements.

5.3 Presentations/Site Inspections

5.3.1 The Board, may during the evaluation of tenders, undertake site inspections of tenderer's or their subcontractor's proposed premises.

5.3.2 The Board, may in its discretion, and as part of the evaluation process, invite any or some of the tenderers to make personal presentations regarding their tender. The tenderer shall make any presentations at its own cost.

5.3.3 Receiving a presentation by a tenderer in no way represents a commitment by the Board to accept any aspect of the tender.

5.3.4 All information obtained during the course of presentation or site inspection may be taken into consideration in the evaluation of tenders.

5.4 Acceptance or Rejection of Tenders

5.4.1 The Board may assess an Alternative Tender against the evaluation criteria when submitted with a Conforming Tender.

5.4.2 The Board expressly reserves the right to accept, in its discretion, either or both of the following:

(a) Any Alternative Tender or part of an Alternative Tender, when submitted with a Conforming Tender; and

(b) Any other Non-Conforming Tender or part of a Non-Conforming Tender (not, in either case, being an Alternative Tender or part of an Alternative Tender) that, in the Board's opinion, is substantially a Conforming Tender.

5.4.3 The Board is not bound to accept the lowest tender.

5.4.4 If the Board rejects all the tenders received it may invite fresh tenders based on the same or different criteria (specifications and details contained in Alternative Tenders will not be used as the basis for the calling of new tenders).

5.5 Post Tender Negotiations

5.5.1 Before making any determination as to acceptance or rejection of Tenders the Board may, at its discretion, elect to conduct limited negotiations with preferred tenderers, including those who have submitted Alternative Tenders or who have submitted Conforming Tenders, to mutually improve outcomes.

5.5.2 The Board will generally not enter into negotiations to amend standard conditions of contract contained in Part D and Part E if applicable.

5.5.3 If the Board considers that none of the tenders are fully acceptable either due to the level of non-conformance or because they do not represent sufficient value for money, but considers that full conformity is achievable, negotiations may be conducted with the tenderer that submitted the most conforming tender based on the evaluation criteria. The purpose of the negotiations will be advised by the Board and made clear to the participants before the commencement of negotiation.

5.5.4 The Board may at its absolute discretion elect to conduct post tender negotiations under clause 5.5.3 with more than 1 tenderer in the event that it decides that the closeness of the tenders or timing constraints warrants doing so.

5.6 Exchange of Information between Government Agencies

5.6.1 Lodgement of a tender will itself be an authorisation by the tenderer to the Board to make available, on request, to any NSW government agency information, including but not limited to, information dealing with the tenderer's performance on any contract that may be awarded. Such information may be used by the recipient NSW Government agency for assessment of suitability for pre-qualification, selective tender lists, expressions of interest or the award of a contract or termination of contract.

5.6.2 The provision of the information by the Board to any other NSW Government agency is agreed by the tenderer to be a communication falling within *section 30 of the Defamation Act 2005 (NSW),* and the tenderer shall have no claim against the Board and the State of New South Wales in respect of any matter arising out of the provision or receipt of such information, including any claim for loss to the tenderer arising out of the communication

5.6.3 In the evaluation of tenders, the Board may take into account any information about the tenderer that the Board receives from any source.

5.6.4 To avoid doubt, information that may be collected, exchanged and used in accordance with this provision includes "personal information" about the tenderer for the purposes of the Privacy and Personal Information Protection Act 1998. Lodgement of a tender will be an authorisation by the tenderer to the Board to collect such information from third parties, and to use and exchange such information in accordance with this clause 5.6.

5.6.5 The tenderer's attention is drawn to the Freedom of Information Act 1989 which obliges disclosure of the contract documents resulting from the tender and may confer rights, subject to the terms of that Act, to access, and to require the correction of, information held by certain agencies, including tenders held by the Board. A summary of the provisions is contained in the Annexure 1 to Part B (Disclosure Information).

6 Method of Acceptance

6.1.1 Acceptance of a tender or part tender will be subject to the execution of a formal Deed of Agreement in the terms of Part D and Part E if applicable. Until the Principal and the successful tenderer(s) execute a formal Agreement there will be no legally enforceable agreement concluded between them.

7 Disclosure Information

7.1.1 Following the Board's decision, all tenderers will be notified in writing of the outcome of their Tenders.

7.1.2 Details of tenderers and the outcome of the tender process will be disclosed in accordance with the Freedom of Information Act 1989 and the NSW Government Tendering Guidelines, available at:
http://www.dpws.nsw.gov.au/Government+Procurement/Procurement+Policy+Framework/NSW+Government+Tendering+Guidelines.htm

7.1.3 An outline of these requirements can be found in Annexure 1 to Part B of this RFT.

8 Complaints Procedure

It is the NSW Government's objective to ensure that industry is given every opportunity to win Government contracts. Should any entity feel that it has been unfairly excluded from tendering or unfairly disadvantaged by the Conditions in Part D and/or Part E, or the Statement of Requirements in Part F, it is invited to write to:

Chairperson
State Contracts Control Board
Level 22, McKell Building
2-24 Rawson Place
Sydney NSW 2000

ANNEXURE 1 TO PART B (Disclosure of Information)

Disclosure of information concerning tenderers and outcome of the tender process

1. In accordance with the NSW Government Tendering Guidelines referred to in clause 7.1.2 and found at *http://www.dpws.nsw.gov.au/Government+Procurement/Procurement+Policy+Framework/NSW+Government+Tendering+Guidelines.htm*, the following **tender information** is required to be disclosed -

Tender Type	Level of disclosure	Basis of disclosure
For all public calls for tender, expressions of interest or other such public calls which may result in a contract with the private sector.	As a minimum: • a concise description of the proposed works, goods or services the subject of the tender call; • the date responses to the tender call close and where responses are lodged; and • location of the tender call documents. The names and addresses of all entities which submit responses.	Routine public disclosure at the time tender calls are advertised. Routine public disclosure within 7 days of the date tender calls closed.
In a multi-stage tender process.	The names and addresses of the shortlisted entities, except where such disclosure is likely to compromise the competitiveness of the subsequent tender process.	Routine public disclosure within 7 days of these entities being advised of their shortlisting.

2. In accordance with the NSW Government Tendering Guidelines referred to in clause 7.1.2, the following **contract** information is required to be disclosed -

Contract size and type	Level of disclosure	Basis of disclosure
Class 1 contracts All government contracts with estimated value $150,000 or above).	a) The name and business address of the contractor; b) Particulars of any related body corporate (within the meaning of the Corporations Act 2001 of the Commonwealth) in respect of the contractor, or any other private sector entity in which the contractor has an interest, that will be involved in carrying out any of the contractor's obligations under the contract or will receive a benefit under the contract; c) The date on which the contract became effective and the duration of the contract; d) Particulars of the project to be undertaken, the goods or services to be provided or the real property to be leased or transferred under the contract; e) The estimated amount payable to the contractor under the contract; f) A description of any provisions under which the amount payable to the contractor may be varied;	Routine public disclosure within 60 days after the contract becomes effective.

	g) A description of any provisions with respect to the renegotiation of the contract; h) In the case of a contract arising from a tendering process, the method of tendering and a summary of the criteria against which the various tenders were assessed; and i) A description of any provisions under which it is agreed that the contractor is to receive payment for providing operational or maintenance services.	
Class 2 contracts Class 1 contracts (i.e government contracts with estimated value $150,000 or above) which also: - result from a direct negotiation where there has not been a tender process; or - have been the subject of a tender process and where the final contract terms and conditions are substantially negotiated with the successful tenderer (this includes alliance type contracts); or - involve operation or maintenance obligations for 10 years or longer; or - involve a privately financed project as defined by relevant Treasury guidelines; or - - involve a transfer of land or other asset to a party in exchange for the transfer of land or other asset to an agency.	The information required for class 1 contracts and a) Particulars of future transfers of significant assets to the State at zero, or nominal, cost to the State, including the date of their proposed transfer; b) Particulars of future transfers of significant assets to the contractor, including the date of their proposed transfer; c) The results of any cost-benefit analysis of the contract conducted by the agency; d) The components and quantum of the public sector comparator if used; e) Where relevant, a summary of information used in the contractor's full base case financial model (for example, the pricing formula for tolls or usage charges); f) Where relevant, particulars of how risk, during the construction and operational phases of a contract to undertake a specific project (such as construction, infrastructure or property development), is to be apportioned between the parties, quantified (where practicable) in net present-value terms and specifying the major assumptions involved; g) Particulars as to any significant guarantees or undertakings between the parties, including any guarantees or undertakings with respect to loan agreements entered into or proposed to be entered into; and h) Particulars of any other key elements of the contract.	Routine public disclosure within 60 days after the contract becomes effective.
Class 3 contracts Class 2 contracts where the estimated value of the government contract is $5 million or more.	The information for class 1 and 2 contracts and the complete contract, less confidential information. Note: if some or all of a class 3 contract is not disclosed for reasons of confidentiality, the agency is to disclose: • the reasons for not publishing the contract or provisions; • a statement as to whether the contract or	Routine public disclosure within 60 days after the contract becomes effective.

	provisions will be published and, if so, when; and • where some but not all of the provisions of the contract have been disclosed, a general description of the types of provisions that have not been published.	

3. Requests for disclosure of additional contract information

Tenderers must acknowledge that any person may make a specific request to the State Contracts Control Board for any item of contract information for class 1 or class 2 contracts, or for a copy of a contract where it is a class 3 contract, which is not required to be routinely disclosed under section 15A of the Freedom of Information Act 1989. (" FOI Act") The State Contracts Control Board must provide the requested contract information or the requested copy of the contract to the requesting person (less any confidential information) within 60 days of receiving the request.

Where a copy of a contract has been requested and some or all of the contract is not provided for reasons of confidentiality, the State Contracts Control Board will disclose:

- the reasons for not providing some provisions or all of the contract;
- a statement as to whether the contract or provisions will be provided and, if so, when; and
- where some but not all of the provisions of the contract have been provided, a general description of the types of provisions that have not been provided.

4. Disclosure of amendments or variations to contract information under the FOI Act
The FOI Act requires that, if there is an amendment to the contract terms or a material variation made under the contract that changes information already routinely disclosed under the FOI Act, the State Contracts Control Board must ensure that the information concerning the change is routinely disclosed within 60 days after such amendment or variation becomes effective, less any confidential information. In the case of class 3 contracts, the full amendment or material variation, less any confidential information, must be disclosed within the 60 day timeframe.

5. Confidential information
None of the disclosure obligations contained in the FOI Act, or the requirements for disclosing tender information or a copy of a contract or information in relation to a contract under these guidelines, require the disclosure of:

- the commercial-in-confidence provisions of a contract (as defined in section 15A (14) of the FOI Act) (the contractor's financing arrangements; the contractor's cost structure or profit margins; the contractor's full base case financial model; any intellectual property in which the contractor has an interest; or any matter whose disclosure would place the contractor at a substantial commercial disadvantage in relation to other contractors or potential contractors, whether at present or in the future.);
- details of any unsuccessful tender;
- any matter that could reasonably be expected to affect public safety or security; or
- information which would be exempt from disclosure if it were the subject of an application under the FOI Act.

Where such confidential information is withheld, the State Contracts Control Board must inform the requesting person that access to that information may be sought in accordance with the Freedom of Information Act. This will enable a person seeking the information to challenge that decision under the Freedom of Information Act.

6. Tenderers are invited to nominate items they consider are confidential and why.

NSW Department of Commerce

NSW Procurement – Contracting Services is a Business Unit of the NSW Department of Commerce

NSW Procurement – Contracting Services invites this tender for and on behalf of the NSW Government State Contracts Control Board

TENDER RESPONSE

Contract *0801890 - Solar Power Systems*

Period: Three (3) years with the option to extend for two (2) further periods each of up to 1 year in duration

RFT Number *0801890*

Your Company's Legal Name: *<Insert Company name>*

Your Company's Trading Name: *<Insert Trading name>*

Your Company's ABN number: *<Insert ABN number>*

Contact Name: *<Insert name of Contract Administration Officer>*

Contact Phone: *<insert telephone no>*

If submitting an electronic Tender, please answer the following <u>and indicate Yes or No below:</u>

- Are you providing supporting documents in hard copy or on CD-ROM?
  Yes/No
- Did you clearly mark the supporting documents as "Supporting Documents to RFT No *0801890*
  Yes/No

TABLE OF CONTENTS

PART C1 TENDER RESPONSE TO PART B 4

1. Introduction 4

2 Pricing and related factors 4

2.1 Price Schedule 4

2.2 Price Basis 4

2.3 Settlement discounts 5

2.4 Other discounts 5

2.5 Locations Tendered 6

3. Selection Criteria 7

(ii) Industry Impact Assessment and Local Industry Participation Plan 26

4. Other information required 35

4.1 Details of ownership 35

4.2 Contracting as agent/trustee 36

4.3 Current Legal Proceedings 36

4.4 Addenda to this RFT after issue 36

4.5 Further information 37

4.6 Tender validity period 37

4.7 Supply of Australian Business Number 37

4.8 Conflict of Interests 37

4.9 National Product Catalogue (NPC) 37

5. Tenderer Identification Details 38

PART C2 PRICE SCHEDULE 39

PART C3 ACKNOWLEDGMENT AND CONFIRMATION OF TENDER 66

PART C The Tender Response

PART C1 Tender Response to Part B

1. Introduction

1.1 The information provided in this Part will be used in the assessment of Tenders. Questions have been framed to ensure responses that are relevant to the selection criteria. Please provide attachments where necessary, clearly labelled and cross-referenced.

1.2 References to "you" in this Part means the tenderer and all responses given will be taken to be responses of the tenderer.

1.3 Tenderers may tender for one or more locations and must tender for an end to end solution.

2 Pricing and related factors

2.1 Price Schedule

Tenderers are to complete the pricing schedule detailed at C2.

System scenarios – A range of scenarios have been prepared, each scenario being a system of a particular output, with particular panel types for a range of installation scenarios that relate to actual circumstance in schools.

Greater Sydney Metropolitan – Sydney Metropolitan includes the following areas Greater Sydney Metropolitan, Blue Mountains, Hunter/Central Coast, Illawarra

Regional Areas – includes all areas not included in the Greater Sydney Metropolitan and is to be priced as follows North Coast, New England, South East, Riverina and Western NSW

Component Pricing - Pricing will be requested for components, being a unit price for panels, inverters, meters and other necessary equipment. Rates will be requested for such things as labour and materials, transport and delivery.

System Pricing - Pricing is requested for system scenarios. The pricing for scenarios will need to be "constructed" from the unit prices and rates as submitted. Tenderers will be required to estimate the hours of labour required for each scenario as well as the travel, transport and delivery costs.

Pricing by region - tenderers are able to provide different pricing for scenarios for different regions. However prices for components such as panels, inverters, meters and other equipment, and materials, will need to be the same for all regions. The pricing variations for regions are restricted to such components such as labour (no of hours), travel, transport and delivery. Only one price per region for reach systems scenario is requested.

2.2 Price Basis

Tenderers must indicate below the price basis of your Tender. Select the price basis from one of the options below (tick corresponding box below):

Option 1: Firm for the entire duration of the Agreement _____(__) months plus _____(__) months optional extension period

Option 2: Firm for the first twelve (12) months of the term of the Agreement then subject to review at the end of that period and each twelve (12) months following and at the request of the Contractor based on Benchmarking with other suppliers within the market place.

<indicate the appropriate box below>

1. ☐

2. ☐

2.3 Settlement discounts

The Tender Prices are subject to a settlement discount of:-

2.3(a)	%	for payment within 14 days from the date of receipt of invoice.
2.3(b)	%	for payment made during the month following that in which the invoice has been rendered.
2.3(c)	%	for payment within days from the date of receipt of invoice.

2.4 Other discounts

2.4.1 Sole-Contractor discount

Indicate below whether you are willing to offer a discount from your tendered price in the event that you are the sole-Contractor for a Region

Yes/No

If **"Yes"**, indicate below the size of the discount.

_____

_____

_____

Indicate below whether you are willing to offer a discount from your tendered price in the event that you are the sole-Contractor for more than one Region.

Yes/No

If **"Yes"**, indicate below the size of the discount.

_____

_____

_____

Indicate below whether you are willing to offer a discount from your tendered price in the event that you are the sole-Contractor for the State.

Yes/No

If **"Yes"**, indicate below the size of the discount.

_____

2.4.2 Rebates

Indicate below whether you are willing to offer Rebates for accumulative expenditure on all Government orders for the amounts specified below in each 12 month period. Tenderers may offer alternative amounts.

Yes/No

If **"Yes"**, indicate below the size of the rebate and any conditions under which this discount will be given.

Annual Sales	**Percentage Rebate**
$1,000,000 - $5,000,000	
$5,000,001 - $10,000,000	
$10,000,000 - $20,000,000	
>$20,000,000	
Other Please specify	

Tenderers are to note that any rebate will be payable directly to the NSW Department of Commerce.

2.5 Locations Tendered

Please indicate what Location you are tendering for

Location	*Yes/No*
Greater Sydney Metropolitan	
North Coast	
New England	
South East	
Riverina	
Western NSW	

3. Selection Criteria

The evaluation criteria for this RFT (which include but are not limited to) are:

(a) **Fitness for purpose including**

(i) **Quality of product design and range of products,**

Schedule of Equipment				
Item	**Manufacturer**	**Model**	**Length of Time on market**	**No of Units Installed**
1.1 Rigid Monocrystalline Photovoltaic Module For 1 kWp PV system For 2 kWp PV system For 3 kWp PV system For 4 kWp PV system For 5 kWp PV system				
1.2 Rigid Multicrystalline Photovoltaic Module For 1 kWp PV system For 2 kWp PV system For 3 kWp PV system For 4 kWp PV system For 5 kWp PV system				
1.3 Rigid Amorphous Photovoltaic Module For 1 kWp PV system For 2 kWp PV system For 3 kWp PV system For 4 kWp PV system For 5 kWp PV system				
1.4 Flexible Amorphous Photovoltaic Module For 1 kWp PV system For 2 kWp PV system For 3 kWp PV system For 4 kWp PV system For 5 kWp PV system				
1.5 Inverter(s) For 1 kWp PV system For 2 kWp PV system For 3 kWp PV system For 4 kWp PV system For 5 kWp PV system				

Schedule of Equipment				
Item	**Manufacturer**	**Model**	**Length of Time on market**	**No of Units Installed**
1.6 Mounting frame for monocrystalline modules Flush-to-roof type on tiled roof (Scenario A as per 'Scenario Definitions') Flush-to-roof type on corrugated metal roof or metal deck roof (Scenario B as per 'Scenario Definitions') Raked type on flat roof < 5° pitch (Scenario C as per 'Scenario Definitions') Raked type on pitched corrugated roof or metal deck roof (Scenario D as per 'Scenario Definitions')				
1.7 Mounting frame for multicrystalline modules Flush-to-roof type on tiled roof (Scenario A as per 'Scenario Definitions') Flush-to-roof type on corrugated metal roof or metal deck roof (Scenario B as per 'Scenario Definitions') Raked type on flat roof < 5° pitch (Scenario C as per 'Scenario Definitions') Raked type on pitched corrugated roof or metal deck roof (Scenario D as per 'Scenario Definitions')				
1.8 Mounting frame for rigid amorphous modules Flush-to-roof type on tiled roof (Scenario A as per 'Scenario Definitions') Flush-to-roof type on corrugated metal roof or metal deck roof (Scenario B as per 'Scenario Definitions') Raked type on flat roof < 5° pitch (Scenario C as per 'Scenario Definitions') Raked type on pitched corrugated roof or metal deck roof (Scenario D as per 'Scenario Definitions')				

Schedule of Equipment				
Item	**Manufacturer**	**Model**	**Length of Time on market**	**No of Units Installed**
1.9 Mounting frame for flexible amorphous modules Flush-to-roof type on tiled roof (Scenario A as per 'Scenario Definitions') Flush-to-roof type on corrugated metal roof or metal deck roof (Scenario B as per 'Scenario Definitions') Raked type on flat roof < 5° pitch (Scenario C as per 'Scenario Definitions') Raked type on pitched corrugated roof or metal deck roof (Scenario D as per 'Scenario Definitions')				
1.10 Data-Logger				
1.11 DC Switchgear For 1 kWp PV system For 2 kWp PV system For 3 kWp PV system For 4 kWp PV system For 5 kWp PV system				
1.12 AC Switchgear For 1 kWp PV system For 2 kWp PV system For 3 kWp PV system For 4 kWp PV system For 5 kWp PV system				
1.13 Lockable Cabinet				

- **Durability of product – used in an educational environment**

Tenderers shall provide details in relation to the durability of the product and demonstrate that the Deliverables are suitable for installation within an educational environment

_____

_____

_____

- **Simplicity of connection to the school network**

Tenderers shall provide details of how the Deliverables will be connected to the school network and provide details of any IT system requirements that may need to be considered.

- **Ease of use in an educational environment**

Tenderers shall provide details of how the system can easily be used in an educational environment.

(ii) **innovative aspects;**

Tenderers shall provide details below of any innovative aspects of the systems offered

(iii) **performance;**

Tenderers shall provide details of the actual solar generation (kWh) versus predicted solar generation (kWh) for each unit offered.

(iv) **Warranty and Servicing arrangements**

Give full details of any guarantees or warranties relating to the Deliverables offered. If a specific warranty or warranties is or are stated to be a requirement or requirements in Part F, confirm that it is, or they are, offered. Where free service with respect to the Deliverables is offered during the period of guarantee or warranty, provide addresses (both Sydney and country areas) where service is available. State whether service is available at those points after the expiration of the period of guarantee or warranty and, if so, what charges are applicable.

The minimum extent of warranty offered is that prescribed by legislation, where applicable. **Tenderers should refer to Part F, Annexure A for details of minimum warranty requirements**

(v) **Maintenance**

Maintenance Schedule

Tenderers shall provide details of the recommended maintenance schedules for the solar power systems offered in the table below. All costs associated with maintenance are to be included at Part C2. Tenderers are advised that the customer may choose to use alternative maintenance providers. The use of alternative maintenance providers should not invalidate the warranty offered by tenderers.

SYSTEM OR COMPONENT	MAINTENANCE ACTION	FREQUENCY	REMARKS
PV modules	Check for visual defects including: a) Fractures b) Browning or discolouration c) Moisture penetration d) Frame corrosion		Modules with visual defects should be further inspected for performance and safety to determine the need for replacement
	Inspect junction boxes for: a) Tightness of connections b) Water accumulation / build up c) Integrity of lid seals d) Integrity of cable entrance, glands and/or conduit sealing e) Integrity of clamping devices Verify by-pass diodes		Any defective seals, clamps and by-pass diodes should be replaced
Wiring installation	Verify mechanical integrity of conduits		Any damaged conduit should be replaced
	Verify insulation integrity of cables installed without conduit		Any damaged cable should be replaced
	Check junction boxes for: a) Tightness of connections b) Water accumulation / build up c) Integrity of lid seals d) Integrity of cable entrance, glands and/or conduit sealing e) Integrity of clamping devices Verify: i. Blocking diodes ii. Surge arresters for degradation		Any defective seals, clamps, blocking diodes and surge arresters should be replaced
	Check earthing connections (if applicable): a) Tightness of connections b) Corrosion		Replace if necessary
Electrical characteristics	Measure open circuit voltages		Record results in maintenance logbook

SYSTEM OR COMPONENT	MAINTENANCE ACTION	FREQUENCY	REMARKS
	Measure short circuit currents		
	Check PV array electrical output is consistent with prevailing weather conditions		
	Check inverter station operation is correct		
Protective devices	Verify operation of circuit breaker(s)		
	Verify operation of earth fault current protection system		
	Verify operation of solar array isolation device(s)		
Mounting structures	Verify tightness and integrity of bolts and other fastening devices		
	Check array mounting security		
	Check damage to mechanical cable protection		
	Inspect for corrosion		

Tenderers should provide any additional information in relation to warranty in the space below:

_____

_____

_____

- **Other comments on fitness for purpose**

State here any other details you may wish to add, particularly regarding the innovative aspects and performance of the tendered Deliverables.

_____

_____

_____

- **Provide the following additional information:**

Tenderers shall provide the following information as an attachment to their tender

Single Line Diagram (electrical configuration) of each proposed PV system. Include details of: • Number of PV modules in series and in parallel • Rating of circuit protection (fuses / switchgear)

• DC and AC cable sizes assuming 20m lengths
Technical Specifications Tenderers shall provide full technical specifications for all products offered including but not limited to • Model and Brand • Proof of compliance to all standards and certification as detailed in Part F, Annexure A for all Products offered • Address all technical requirements detailed in Part F, Annexure A for all Products offered • Methods of waterproofing roof/wall penetrations
Additional Information • Tenderers shall also provide the following information for all products offered • No of years the product has been on the Market • Availability of Product • No of each of the Products sold in the last 3 years • No of Warranty claims made for each unit sold in the last 3 years

(b) **Delivery requirements**

Provide details of your guaranteed delivery times from receipt of Order together with a production plan, detailing how you intend to maintain guaranteed delivery times. Tenderers should refer to Part E for details of the NSW Department of Education and Training's delivery requirements.

The production plan must provide full details of your supply chain process for the supply of the Deliverables. The plan must outline lead times, strategic alliances or specific arrangements with suppliers or sub-contractors.

Detail the outlets to which Orders may be directed, stating any limitations to the range of Deliverables that may be ordered at each.

Delivery shall be completed not later than ten (10) weeks from the date of receipt of an Order but before that date if possible. You must indicate below whether the stated delivery time will be met or, if not, the best delivery that can be offered. Delivery includes the full installation and commissioning of the solar power system.

Tenderers are to indicate below the lead-time for standard deliveries and installation in each of the following Regions.

Location	*Product class*	*Product class*	*Product class*
Greater Sydney Metropolitan			
North Coast			
New England			
South East			
Riverina			
Western NSW			

(c) **Capacity to perform the Agreement including:**

(i) **Production/technical capacity;**

Demonstrate the suitability of your resources/facilities/procedures for the purposes of fulfilling the Requirement, including your production processes, warehousing, dispatch, certification, transport and delivery arrangements. Include details of:

(a) size of premises;
(b) back up facilities and any significant equipment if available to ensure the completion of work;
(c) maintenance schedules for any significant equipment nominated in (b).

Describe your current stock levels and any issues you may experience during different times of the year in maintaining necessary levels.

Tenderers are to provide details of the number of complete solar power systems of the type offered that they can supply and install within a 12 month period of each KW requested in this RFT. Tenderers are to provide this information for each type of solar power system offered.

- **Current Commitments**

Please provide details on how you would integrate the operation of this requirement into your current business activities.

_____

_____

_____

- **High Demand**

Tenderers shall provide details of how they would deal with an influx of orders and ensure availability of the Deliverables to meet delivery requirements.

_____

_____

_____

- **BSCE Accreditation (refer to Annexure A to Part F)**

Australian Business Council for Sustainable Energy (BCSE) grid-connected photovoltaic power system accreditation	**Accreditation number**	**Accreditation awarded**	**Accreditation expires**
Design and Supervise			
Greater Sydney Metropolitan			
North Coast			
New England			
South East			
Riverina			
Western NSW			
Installation			
Greater Sydney Metropolitan			

Australian Business Council for Sustainable Energy (BCSE) grid-connected photovoltaic power system accreditation	**Accreditation number**	**Accreditation awarded**	**Accreditation expires**
North Coast			
New England			
South East			
Riverina			
Western NSW			

- **In-service education and training (refer Annexure A to Part F)**

Describe the in-service education and training that will be offered, where appropriate, in support of Deliverables supplied under this Agreement. All costs are to be included in the tendered price.

(ii) **Ability to provide an end to end solution;**

Tenderers shall provide details of how they will provide an end to end solution to meet DET's needs.

(iii) **Human resource capacity, qualifications, skills and experience;**

Provide details of qualifications and experience of key personnel to be involved in the operation of the proposed agreement.

(iv) **Financial Capacity and stability (including years in business and security considerations)**

State the number of years you have been in business in the form in which you are presently constituted.

_____

State the number of years providing the required Service: _____

Scope of respondent's current business activities

_____

_____

_____

_____

- **Financial Capacity and Viability of the respondent**

Give the annual Australian turnover for the past three (3) years in $A.

1. _____ 2. _____ 3. _____

During the course of the tender process, it may be required that you submit a copy of your last three annual financial reports to the Board, or to Kingsway Financial Assessments if so directed, in order to conduct financial analysis on behalf of the Board. Indicate below whether you will provide these reports if required.

Yes/No

If "**No**", comment below:

_____

_____

_____

- **Performance Management**

Tenderers are to provide comments below in relation to the Performance Management at Schedule 7 to Part D. Tenderers shall also provide details of any additional performance measures which they believe should be considered as part of this Agreement.

_____

_____

_____

Tenderers are to provide details in the table below of what they propose would be achievable measures for the Performance Management at Schedule 7, Part D

Performance Measure	**%**
Time Management	
Standard of Work	
Personnel/Sub-Contractors	
Contract Administration	
Co-Operative Relations	
OH&S/Environmental Management	
Solar Power Unit Performance	

(v) **Maintenance and support service levels including availability of help desk for repair and help calls;**

If you have a toll-free help desk number specify the geographical area covered, the number(s) and help desk hours

Specify any non toll-free help desk number(s), corresponding toll charges, and help desk hours

(vi) **Quality assurance systems**

Indicate below whether you have attached any certification from approved testing authorities that confirm that the items tendered meet the relevant Australian, overseas or International Standards.

Yes/No

Indicate whether your company has attained certification under AS/NZS ISO 9001:2000 (including if you are in the process of transition from AS/NZS ISO 9001:1994 or AS/NZS ISO 9002:1994 to AS/NZS ISO 9001:2000) or is proceeding towards getting certification.

Yes/No

If you are in the process of attaining certification, provide evidence and a projected timetable and schedule for certification.

(vii) **Suitability of sub-contractors;**

Is any part of the Deliverables to be offered through a dealer or distributor? In this context, suppliers of raw materials and/or minor components to be incorporated into the Deliverables supplied by the Contractor are not regarded as dealers or distributors for the purpose of this question.

Yes/No

If **"Yes",** in respect of each nominated dealer or distributor please provide the following information, so far as applicable. If unable to provide this information in the format below, attach to your Tender the information required for each dealer or distributor.

Dealer/distributor	
1) If a company, Company Name	
2) If a partnership, Partnership Name	
3) If an individual, individual's name	
4) Trading Name	
5) Australian Business Number (ABN)	
6) Australian Company Number (ACN)	
7) Registered Office (if a company)	
8) Site Address (principal place of business)	
9) Postal Address (principal place of business)	
10) Alternative Address	
11) Contract Administration Contact Name	
12) Contract Administration Contact Telephone No.	
13) Contract Administration Contact E-mail Address	
14) Contract Administration Contact Fax No.	
15) Sales Order Contact Name	
16) Sales Order Phone No.	
17) Sales Order E-mail Address	
18) Sales Order Fax No.	
19) Chief Executive Officer's (CEO) Name	
20) Switchboard Telephone No.	
21) Company E-mail Address	
22) Website address	
23)Items able to be supplied	

Is any part of the Deliverables to be offered through a sub-contractor? In this context, suppliers of raw materials and/or minor components to be incorporated into the Deliverables supplied by the Contractor are not regarded as sub-contractors for the purpose of this question.

Yes/No

If **"Yes",** in respect of each nominated sub-contractor, please provide the following information, so far as applicable:

Sub-contractor	
If a company, Company Name	
If a partnership, Partnership Name	
If an individual, individual's name	
4) Trading Name	
5) Australian Business Number (ABN)	
6) Australian Company Number (ACN)	
7) Registered Office (if a company)	
8) Site Address (principal place of business)	
9) Postal Address (principal place of business)	
10) Alternative Address	
11) Contract Administration Contact Name	
12) Contract Administration Contact Telephone No.	
13) Contract Administration Contact E-mail Address	
14) Contract Administration Contact Fax No.	
15) Sales Order Contact Name	
16) Sales Order Phone No.	
17) Sales Order E-mail Address	
18) Sales Order Fax No.	
19) Chief Executive Officer's (CEO) Name	
20) Switchboard Telephone No.	
21) Company E-mail Address	
22) Website address	
23)Items able to be supplied	

(viii) **Suitability of proposed dealers, distributors and sub-contractors**

For each nominated dealer or distributor, provide details of their experience and qualifications in the provision of similar Deliverables.

_____

_____

_____

For each nominated sub-contractor, provide details of their experience and qualifications in the provision of similar Deliverables.

(ix) **Previous experience and performance on similar agreements for the products and services covered in this RFT or other products and services;**

- **Previous contract experience and standard of contract performance**

Describe at least three (3) recent and relevant grid-connect photovoltaic system design and installations your organisation has been involved in the previous 2 years. Include details such as client references, the nature of the project (i.e. rooftop or groundmount) and the size of the photovoltaic installation (kWp). Note a key selection criteria to identify those parties with whom DET will seek to further discussions is demonstrable experience with one enterprise of similar complexity to DET that is of a similar size or can be scaled to DET's size

Project Description	**Project Size (kWp)**	**Equipment/Brand / Model Installed**
…… …… ……		
…… …… ……		
…… …… ……		

Describe any previous experience in coordinating a solar powered program. This may include maintenance programs, government or non-government programs. Include details such as client references , the nature of the project and the value of the contract ($).

Project Description	Project Value ($)	Equipment/Brand / Model Installed
…… …… ……		
…… …… ……		
…….. …….. ……..		

If you have undertaken any previous Contracts provide details of any assessment undertaken of your performance. If performance reports were prepared in respect of your performance, please provide copies.

_____

_____

_____

- **Other comments on capacity or ability to perform the agreement**

State here any other details you may wish to add. Please also address your capacity to perform the Agreement in the context of the current commitments of your organisation. (Note that details of previous performance of similar agreements are sought in cl.10 below, and should not be referred to here.)

_____

_____

_____

(x) **Record of ethical behaviour in service delivery**

Please provide an explanation of how your enterprise would be structured in respect of this contract to ensure that at all times it operated in the best interests of the Government. Also

provide information on any identified potential conflicts of interest and how they would be addressed in the operation of the contract.

_____

_____

_____

Indicate the measures your enterprise has in place to ensure that it always acts in an ethical manner, in all business dealings.

_____

_____

_____

(xi) **Referee reports**

Please provide details of three (3) business referees who may be contacted as part of the evaluation of this EOI.

Referee No 1.
Name: _____

Position: _____

Company: _____

No. of Years respondent has provided required Service to Referee: _____ years
Telephone No: _____

Fax No: _____

Email Address: _____

Referee No 2.
Name: _____

Position: _____

Company: _____

No. of Years respondent has provided required Service to Referee: _____ years
Telephone No: _____

Fax No: _____

Email Address: _____

Referee No 3.
Name: _____

Position: _____

Company: _____

No. of Years respondent has provided required Service to Referee: _____ years
Telephone No: _____

Fax No: _____

Email Address: _____

(xii) **Compliance with other requirements of the Principal, (including ability to market the proposed Agreement).**

The marketing of this agreement may include:

(a) the provision of promotional material,
(b) direct marketing,
(c) product literature, brochures and other sales related activities.

Indicate below which, if any, of the activities above you would be prepared to assume responsibility:

_____

_____

_____

Provide any other relevant information below

_____

_____

_____

(d) **Compliance with the proposed conditions of Part D, and E if applicable.**

Do you agree to be bound by all the conditions contained in Part D and E of this RFT?

Yes/No

If "**No"**, provide a full statement of all amendments sought, giving reasons.

_____

_____

_____

Do you agree to comply with clause 11.11, Minimum Insurance Requirements, contained in Part D of this RFT?

Yes/No

If "**No"**, provide a full statement of all amendments sought, giving reasons.

_____

_____

_____

Please list the insurances you currently hold, the respective amount (or Limit of Liability) for each insurance policy and their expiry dates.

_____

(e) **Compliance with NSW Government procurement policy and other applicable NSW Government policies, including**

(i) **NSW Government Code of Practice for Procurement**

"Code" means the NSW Government Code of Practice for Procurement, as amended from time to time. The NSW Government Procurement Policy and code are available from the NSW Department of Commerce and can be viewed and downloaded from Department of Commerce Government Guidelines: Goods & Services Procurement Publication.

Have you have read the NSW Government Code of Practice for Procurement and taken them into consideration in preparing and submitting your Tender?

Yes/No

Tenderers must comply with the Code and agree to provide periodic evidence of compliance with the Code and access to all relevant information to demonstrate compliance for the duration of any agreement that may be awarded? Will you comply with the Code and the requirements imposed by it?

Yes/No

(ii) Industry Impact Assessment and Local Industry Participation Plan

Local Industry Participation Plan

Tenderers are required to provide a Local Industry Participation Plan (LIPP) in response to this Industry Impact Statement to be attached, in each case. The LIPP submitted will, if the Tender is accepted, be incorporated in the Agreement. The LIPP must contain:

(a) a clear statement as to how the Tender meets the Government's requirement of maximising opportunities for local participation;
(b) actions to be undertaken to meet and manage the Government's requirements;
(c) actions for the monitoring of performance and reporting under the plan.

The LIPP must describe the likely impact of the Agreement should it be awarded in terms of:

(a) support for regional development;
(b) support for small and medium enterprises;
(c) workforce development and management;
(d) technology development and technology transfer, particularly impacting on identified technology development needs;
(e) research and development or other investment projects;
(f) export opportunities; and
(g) any other positive impact.

Tenderer is to attach your Local Industry Participation Plan

(iii) **SME involvement**

It is NSW Government policy to encourage the development of local industry and to support SMEs. Does your business support this policy objective?

Yes/No

If Yes provide details of the likely percentage of the value of the Deliverables to be provided under the agreement that will be sourced from SMEs and of the activities that will be carried out by SMEs under the agreement.

State below how you will provide opportunities for SMEs in performing any Period Contract awarded. If the project involves formation of a relationship with one or more SMEs, provide the following information:

(a) Name of, and contacts for, each SME
(b) Description of each SME's role
(c) Estimated dollar value of each SME's contribution, and
(d) Level of value-added activity and any other benefits associated with each SME.

(iv) Regional Development

It is NSW Government policy to encourage regional development. Will your business support this policy objective? Yes/No

If **Yes**, provide the following details:

(a) The positive impact that the work flowing to the local region will generate, and any adverse effect should the same work be awarded to a capital city based organisation.

(b) The level and range of activities under the Agreement that will be affecting the region.

(c) The number and type of regionally based enterprises participating in your Tender

(d) The expected regional economic impact of your Tender in terms of:

- training, other skills enhancement and the uptake or maintenance of existing technologies and capabilities
- expected increases in employment and investment and
- the expected impact on existing and future R&D programs and innovation.

(v) Workforce Development

Indicate measures you intend to implement to improve workforce diversity and provide equal employment opportunity for women, people of non-English speaking backgrounds and people with a physical disability if awarded the agreement.

(vi) Opportunities for ATSI people

Indicate measures you intend to implement to improve Aboriginal employment, business skills and economic conditions of Aboriginal communities if awarded the agreement.

(vii) Occupational Health, Safety & Rehabilitation

Tenderers are required to develop and attach, in each case a specific Health and Safety Management Plan for the Agreement.

In order to complete a Health and Safety Management Plan, and for instructions as the required content of the Plan, Tenderers are referred to the NSW Government Procurement Guidelines - OHS&R, specifically to attachments 1 and 2. This document is available electronically at http://www.dpws.nsw.gov.au/nr/rdonlyres/efxtycbtexzihzty3nnlyxzob2ktnrpdlojq6gsaft4hybie4s2tzvlgcvvaneaugupzschzvlkslbkx5fqpr4nqoka/ohs%2006.pdf

Attach a specific Health and Safety Management Plan for the agreement.

The successful tenderer will be required to develop Safe Work Procedures for the Agreement. Safe Work Procedures must include, as a minimum, the following:

(a) procedures that are relevant to the Tenderer's operations;
(b) a description of the tasks and associated hazards;
(c) all precautions to be undertaken to protect health and safety;
(d) control measures and methods to minimise health and safety risks;
(e) reference to health and safety legislation, codes or standards applicable to the work; and if requested, obtaining Safe Work Method Statements from Sub-Contractors 7 days before commencement of the Agreement.

Does your organisation have Safe Work Procedures or specific health and safety instructions in place relevant to its operations?

Yes/No

If **"Yes"**, provide below, or provide reference to below and attach to the completed Part C, a summary listing of procedures or instructions.

Does your organisation have any “permits to work” issued by WorkCover?

Yes/No

If “**Yes”**, provide below, or provide reference to below and attach to the completed Part C, a summary listing of permits.

Does your organisation have documented accident, incident and hazard investigation reporting procedures in place?

Yes/No

If “**Yes”**, provide below, or provide reference to below and attach to the completed Part C, an outline of these procedures.

Set out below, or attach to the completed Part C, an outline of the Safe Work Procedures that you will develop for the agreement, if awarded for each scenario detailed in the pricing schedule at Part C2.

Set out below, or attach to the completed Part C, details of the methods of working on each type of roof (i.e. metal deck/corrugated metal/tiled).

Indicate below whether you will request Safe Work Procedures from any sub-contractors, and if so when you will obtain this if your tender is accepted.

Provide evidence of your OHS&R performance record with relation to accident statistics (lost time, frequency rates, and duration rates).

Attach to the completed Part C the specific Health and Safety Management Plan that you have developed for the agreement, if awarded.

(viii) Environmental Management

Describe in what way or ways your organisation promotes the development of Ecologically Sustainable Development. For assistance in answering this question, you may refer to the Procurement Guidelines on Environment Management available electronically at (refer to the link below and click link on environmental management under Goods and Services Procurement):

http://www.dpws.nsw.gov.au/Government+Procurement/Government+Procurement+Publications/Government+Procurement+Publications.htm?Page={62654EC8-817C-4162-B21B-36722E646E9B}

Provide evidence below of your environmental management and performance capability and your commitment to waste management and energy conservation practices.

Indicate measures you intend to implement to improve environmental performance and management if awarded the agreement

(f) **Compliance with relevant Legislation and standards**

Tenderers shall provide details of how they will ensure that they will comply with the legislation and standards contained in this tender

(g) **Capacity and capability to facilitate electronic commerce through smartbuy®**

(i) **Electronic Commerce (Smartbuy®)**

The E-Commerce section reviews the ability of your organisation to operate in an E-commence marketplace. The review considers your E-commerce capabilities in web-based access (information) and your ability to trade in an on-line environment (online ordering, e-payment and web based catalogue services / integration to government marketplaces, etc).

If you require more information contact the NSW Procurement Client Support Centre on 1800 NSW BUY (679 289) or NSWP_Support@commerce.nsw.gov.au <MAILTO:NSWP_Support@commerce.nsw.gov.au>

As a supplier on NSW Government SCCB contracts you must maintain contract data and pricing information in the smartbuy® system. Only valid and approved pricing as reflected in smartbuy® will be accepted for NSW Government SCCB contracts. The terms and conditions under which you will maintain these details are outlined in Part D. Do you agree to maintain your information for the purposes of purchasing from smartbuy®?

Electronic Commerce smartbuy®

Department of Commerce/eBusiness Solutions requires all SCCB suppliers to register with to facilitate smartbuy® NSW government agencies to view and purchase goods and services online. The Client Services Unit in the eBusiness Solutions provides support services for all suppliers in completing the supplier engagement process, thereby offering maximum exposure of suppliers items to the government market. The steps required for getting established in are outlined smartbuy® below.

The NSW Government has placed a heavy focus on the use of electronic procurement to move significant volumes of NSW Government purchasing through smartbuy®
. If you require more information contact the NSW Procurement Client Support Centre on 1800 NSW BUY (679 289) or NSWP_Support@commerce.nsw.gov.au <MAILTO:NSWP_Support@commerce.nsw.gov.au>. smartbuy®
enables eligible clients to electronically procure goods and services, generally on terms established in Government Contracts. It is intended that all goods and services provided under the Board?s Agreements will be browsed, searched and where appropriate, purchased online via smartbuy®

All successful tenderers are required to accept Orders and other business documents and communications by electronic communication in accordance with the Electronic Transactions Act (NSW) 2000.

Participating in smartbuy®

Successful tenderers will be required to engage smartbuy® which is a three step exercise conducted by eBusiness Solutions. The first step for a successful tenderer is to register the organisation online, through the smartbuy® website.

The second step is for the nominated smartbuy® Supplier Administrator to complete smartbuy® training. This training is conducted by registering and completing the smartbuy® elearning program.

The final step is to have the catalogue content prepared, submitted, reviewed, confirmed and loaded into smartbuy® Catalogue content must be provided to smartbuy®

in the electronic format specified by the Board.

Upon completion of the engagement process, the Supplier Administrator will be issued with a USERID and PASSWORD. This will provide access to their catalogue information as held in smartbuy® as well as their supplier's profile. Buyers will then be able to view and purchase these catalogued items held in smartbuy® .

Additional supplier establishment Requirements

In addition to enrolling in smartbuy®, as explained above, successful tenderer organisations will be required to:

a) submit supplier profile information about themselves and the Goods/Services to which the Agreement applies, to eBusiness Solutions, and keep this information up to date;

b) provide pricing/product information in the specified electronic format; the format and process will be provided to successful Tenderers at the time of notification of acceptance of their tender response.

smartbuy® **Operational Requirements**

The smartbuy® solution is comprised of a number of procurement applications and services including smartbuy® CONNECT. smartbuy® CONNECT is based on an IBM MQ Series platform, and is a full service B2B hub offering a wide range of integration, document transformation and trading partner management capabilities.

All electronic documents transmitted through smartbuy? TRADE are routed via smartbuy® CONNECT. smartbuy? CONNECT may also be used for document transmission directly between Agencies and Contractors, without passing through smartbuy®
TRADE.

Part D outlines the Trading Channels supported by smartbuy® CONNECT for the transmission and receipt of electronic procurement documents. Successful tenderers must select a Trading Channel and meet the smartbuy®
Channel Specification and adhere to the smartbuy® Document Specifications for that Trading Channel. For each electronic document implemented, Contractors must be capable of reading and actioning all mandatory and optional fields defined in the document specification.

If you are a successful tenderer, please nominate your preferred method of document transmission via smartbuy® CONNECT Trading Channels.

HTTPS/xCBL3.0
FTP/CSV
Email/PDF
Fax/PDF

Specify the type of business documents that you are able to send and receive by the Trading Channel specified in the previous question

What is your nominated method?

- ¨ PO
- ¨ PO Change
- ¨ PO Acknowledgement
- ¨ Receipt
- ¨ Receipt Change

¨ Advanced Shipping Notice
¨ Invoice
¨ Technical Message Acknowledgement

Invoices

It is a requirement that Successful Tenders provide electronic invoices to smartbuy® for all purchases by all NSW Government agencies against this contract - irrespective of how the purchase order is received (for example, via fax, telephone, mail, vendor online ordering system, etc). Refer to Part D for details.

What is your nominated method?

HTTPS/xCBL3.0
SFTP/Invoice
Web portal

If you become a successful tenderer, you will be required to provide catalogue content information in the required electronic format. Do you comply?

Yes/No

If “yes”, short listed tenderers will be required to provide catalogue content in the required electronic format specified by the Board. This will allow purchasing to begin on the new contract from inception.

Should your organisation be short-listed for this contract, please confirm your acceptance of this catalogue content preparation requirement.

I have read and understood the smartbuy® documents and agree to comply with all the requirements.

All successful tenderers are required to provide and accept Orders and other business documents and communications by electronic communication in accordance with the Electronic Transactions Act (NSW) 2000. More information on the NSW Government's policy about electronic procurement and smartbuy® can be seen at

a) http://www.smartbuy.nsw.gov.au/ and

b) Click Here

Do you fully comply, substantially comply or not comply?

Successful tenderers will be required to engage smartbuy® which is a three step exercise conducted by eBusiness Solutions. The first step for a successful tenderer is to register the organisation online, through the smartbuy® website. Do you fully comply, substantially comply or not comply?

In addition to engaging smartbuy® as explained above, supplier organisations will be required to:

a) submit specified information about themselves and the Goods/Services to which the Agreement applies, to smartbuy® and keep this information up to date.

b) provide pricing/product information in the electronic format required by the Board. This format will be provided to successful Tenderers at the time of notification of acceptance of their tender response

Do you fully comply, substantially comply or not comply?

In helping the NSW Department of Commerce lead eProcurement adoption across NSW government through smartbuy®, please outline proposed initiatives that your organisation could implement to support and increase the volume of orders being transmitted through the smartbuy® CONNECT during the life of the contract.

If you are a successful tenderer, you must accept orders placed by electronic communication in accordance with the Electronic Transactions Act (NSW) 2000. Do you comply with this Act?

Yes/No

Attached is a copy of the sample catalogue format that is indicative of the contract product information data required. Successful tenderers will be required to complete this document in the required electronic format when requested. This information may be changed from time to time throughout the contract period.

Do you have EAN Barcoding of your Goods?

Yes/No

If awarded the Agreement, do you undertake to provide the Board with details of all EAN Barcodes available, or which may become available for use from time to time, for any Goods supplied under any Customer Contract

Yes/No

(h) **Compliance with the Statement of Requirements.**

Do the tendered Deliverables fully comply with Statement of Requirements at Part F

Yes/No

If "**No"** a full statement of deviations must be given, specifying the relevant clause/s or Deliverable/s and the extent of non-compliance to each.

4. Other information required

4.1 Details of ownership

If you are a company, please provide details of your ownership, that is, Australian, Overseas, name of each shareholder holding 20% or more of your issued share capital, paid-up capital and other relevant details.

If you are a partnership, please provide a list of partners and details of the partnership financial arrangements.

4.2 Contracting as agent/trustee

If awarded the Agreement, do you intend to contract in your own right or as agent for some other entity or entities? If an agent, identify the principal who will be bound by the Deed of Agreement and any authority given by that principal to you to execute any such agreement as its agent.

_____

_____

_____

If awarded the Agreement, do you intend to contract in your own right or as trustee for some other entity or entities? If a trustee, provide a copy of the trust deed, set out the names of the trustees, and provide full details below of your capacity to enter any Deed of Agreement as a result of this RFT.

_____

_____

_____

4.3 Current Legal Proceedings

Are you or any of your directors or close associates currently, or have you, or have your directors or close associates been at any time within the last five years, the subject of any or any pending:

(a) legal proceedings, including winding up or bankruptcy proceedings,
(b) insolvency administrations or investigations; and/or
(c) investigations by ICAC or any other public body?

Yes/No

If **"Yes",** please supply full details below:

_____

_____

_____

4.4 Addenda to this RFT after issue

Are you aware of any Addenda issued by the Board to this RFT after the issue of this RFT?

Yes/No

If the answer is "Yes", indicate below whether you have read and allowed for the Addenda in your Tender.

_____

_____

_____

Please specify how many Addenda have you read and allowed for in your Tender.

It is the responsibility of the tenderer in accordance with the conditions of tender to ensure that they are aware of all addenda issued during the tender period. Failure by the tenderer to allow the addenda in the tender may result in the tender not being considered.

Please attach any addenda issued during the Tender period at this point along with your company's responses to same

4.5 Further information

Provide below any further information you believe is relevant to your Tender, and cross-reference to any clauses of this RFT if applicable.

4.6 Tender validity period

Indicate below the period for which your Tender will remain valid for acceptance from the deadline for lodgement of tenders.

N.B. The minimum validity period is as stated in cl.4.9 of Part B.

4.7 Supply of Australian Business Number

If you do not currently have an ABN, state how and when you intend to obtain an ABN and register for GST.

N.B. Tenderers that do not have an ABN cannot enter into an agreement with the Board.

4.8 Conflict of Interests

In lodging a tender to this RFT, are you aware of any real or perceived conflict of interests (including any relevant relationships) existing, which require your disclosure,

Yes/No

If the answer is “Yes, disclose conflict of interest

4.9 National Product Catalogue (NPC)

Is your organisation a member of GS1 Australia?

Yes/No

Is your organisation assigning Global Trade Item Numbers (GTINs) to all products as the primary item identifier?

Yes/No

Is your organisation registered for the NPC?

Yes/No

Has your organisation already loaded product and pricing data onto the NPC for the purposes of exchanging this information with any of your customers?

Yes/No

If your organisation is not a member of GS1 Australia will you become a member, register for the NPC and meet the NPC requirements if awarded this contract?

Yes/No

5. Tenderer Identification Details

Type or write your identification details as required below.

Type or write your identification details as required below.

1) If a company, Company Name	
2) If a partnership, Partnership Name	
3) If an individual, individual's name	
4) Trading Name	
5) Australian Business Number (ABN)	
6) Australian Company Number (ACN)	
7) Registered Office (if a company)	
8) Site Address (principal place of business)	
9) Postal Address (principal place of business)	
10) Alternative Address	
11) Chief Executive Officer's (CEO) Name	
12) Switchboard Telephone No:	
13) Company email address	
14) Website address:	
15) Respondant's Reference No:	

PART C2 Price Schedule

Scenario Definition

The Pricing Schedules contained in this Part require tenderers to provide costings based on scenarios which are detailed below.

SCENARIO A

Configuration: **Flush-to-roof type installation on corrugated metal roof or metal deck roof**

1. Roof construction is a standard colour metal deck roof or corrugated metal roof;
2. The roof is orientated ± 45 degrees to true north;
3. The roof pitch is at ± 20 degrees to the angle of latitude of the location;
4. Installation is on the roof of a single or double storey school building;
5. There is sufficient room on the roof to install the solar panels and mounting frame;
6. The panel mounting frames will be installed at the same angle and pitch as the roof;
7. The roof structure is suitable for panel mounting and does not require additional structural support;
8. The roof is in good condition;
9. The nearest electrical distribution board is in good condition, is sufficiently rated to withstand the maximum load of the solar PV system and has enough spare poles to install the required additional AC switchgear;
10. There is no need to upgrade any existing wiring or safety switches;
11. There is sufficient space for installing a wall-mounted inverter station located within a lockable cubicle;
12. The panel mounting location is no further than 20 metres from the inverter station;
13. The inverter station is no further than 20 metres from the nearest electrical distribution board;
14. The data-logger is located adjacent to the inverter station, which is located no further than 20 metres from the nearest school network building distributor;
15. The solar panel location is not shaded during the day by trees or other obstructions;
16. The type of development is exempt development and does not require any building approvals;
17. The roof and building does not contain any asbestos product.

SCENARIO B

Configuration: **Flush-to-roof type installation on tiled roof**

1. Roof construction is a standard concrete or clay tiled roof;
2. The roof is orientated ± 45 degrees to true north;
3. The roof pitch is at ± 20 degrees to the angle of latitude of the location;
4. Installation is on the roof of a single or double storey school building;
5. There is sufficient room on the roof to install the solar panels and mounting frame;
6. The panel mounting frames will be installed at the same angle and pitch as the roof;
7. The roof structure is suitable for panel mounting and does not require additional structural support;
8. The roof is in good condition;
9. The nearest electrical distribution board is in good condition, is sufficiently rated to withstand the maximum load of the solar PV system and has enough spare poles to install the required additional AC switchgear;
10. There is no need to upgrade any existing wiring or safety switches;
11. There is sufficient space for installing a wall-mounted inverter station located within a lockable cubicle;
12. The panel mounting location is no further than 20 metres from the inverter station;
13. The inverter station is no further than 20 metres from the nearest electrical distribution board;
14. The data-logger is located adjacent to the inverter station, which is located no further than 20 metres from the nearest school network building distributor;
15. The solar panel location is not shaded during the day by trees or other obstructions;
16. The type of development is exempt development and does not require any building approvals;
17. The roof and building does not contain any asbestos product.

SCENARIO C

Configuration: **Raked type installation on flat roof < 5° pitch**

1. Roof construction is a standard colour low pitch (< 5°) metal deck roof, corrugated metal roof or concrete slab roof with water proof membrane;
2. The roof pitch is < 5 degrees to the horizontal;
3. Installation is on the roof of a single or double storey school building;
4. There is sufficient room on the roof to install the solar panels and mounting frame such that they do not shade each other to any extent between 10:00am and 3:00pm throughout the year;
5. The panel mounting frames will be raked to an angle ± 20 degrees to the location's angle of latitude and orientated towards true north;
6. The roof structure is suitable for panel mounting and does not require additional structural support;
7. The roof is in good condition;
8. The nearest electrical distribution board is in good condition, is sufficiently rated to withstand the maximum load of the solar PV system and has enough spare poles to install the required additional AC switchgear;
9. There is no need to upgrade any existing wiring or safety switches;
10. There is sufficient space for installing a wall-mounted inverter station located within a lockable cubicle;
11. The panel mounting location is no further than 20 metres from the inverter station;
12. The inverter station is no further than 20 metres from the nearest electrical distribution board;
13. The data-logger is located adjacent to the inverter station, which is located no further than 20 metres from the nearest school network building distributor;
14. The solar panel location is not shaded during the day by trees or other obstructions;
15. The type of development is complying development and requires a complying development certificate from a certified authority;
16. The roof and building does not contain any asbestos product.

SCENARIO D

Configuration: **Raked type installation on pitched corrugated metal roof or metal deck roof**

1. Roof construction is a standard colour metal deck roof or corrugated metal roof;
2. The roof is orientated > ± 45 degrees to true north;
3. The roof pitch is < 30 degrees to the horizontal;
4. Installation is on the roof of a single or double storey school building;
5. There is sufficient room on the roof to install the solar panels and mounting frame such that they do not shade each other to any extent between 10:00am and 3:00pm throughout the year;
6. The panel mounting frames will be raked to an angle ± 20 degrees to the location's angle of latitude and orientated towards true north;
7. The roof structure is suitable for panel mounting and does not require additional structural support;
8. The roof is in good condition;
9. The nearest electrical distribution board is in good condition, is sufficiently rated to withstand the maximum load of the solar PV system and has enough spare poles to install the required additional AC switchgear;
10. There is no need to upgrade any existing wiring or safety switches;
11. There is sufficient space for installing a wall-mounted inverter station located within a lockable cubicle;
12. The panel mounting location is no further than 20 metres from the inverter station;
13. The inverter station is no further than 20 metres from the nearest electrical distribution board;
14. The data-logger is located adjacent to the inverter station, which is located no further than 20 metres from the nearest school network building distributor;
15. The solar panel location is not shaded during the day by trees or other obstructions;
16. The type of development is complying development and requires a complying development certificate from a certified authority;
17. The roof and building does not contain any asbestos product.

Pricing

TOTAL MINIMUM RATED CAPACITY OF 1 KILOWATTS PEAK

The lump sums tendered shall form part of the contract. The amounts shall be used to assess tenders. Items shall comply with the technical specification. Prices in the schedule must allow for materials, demolitions, waste, transport, labour, overheads and profit. **Prices shall exclude GST and RECS shall be retained by the purchaser**.

1. PHOTOVOLTAIC MODULES

Technology	Price ($)
Monocrystalline photovoltaic modules	$.....
Multicrystalline/polycrystalline photovoltaic modules	$.....
Rigid amorphous photovoltaic modules	$.....
Flexible amorphous photovoltaic modules	$.....

2. BASE SYSTEM

Item to Tender	Price ($)
Grid-Connect Inverter	$.....
Data-Logger	$.....
DC Switchgear	$.....
AC Switchgear	$.....
DC Combiner Box	$.....
AC Cable (20 meters in length)	$.....
DC Cable (20 meters in length)	$.....
Cat5e Data Cable (20 meters in length)	$.....
Ducting for DC Cabling (20 meters in length)	$.....
Flexible PVC Conduit for AC/DC/Cat5e Cabling (20 meters in length)	$.....
Lockable Cabinet for Inverter Station	$.....
Site Installation Report, Training and Documentation	$.....
All work and obligations under the contract NOT INCLUDED ELSEWHERE in this schedule. Tenderers must provide detailed costings below.	
	$.....
	$.....
SUBTOTAL	**$.....**

3. MOUNTING SYSTEM (SUPPLY ONLY)

Technology	**Scenario**			
	Scenario A (Flush-to-roof installation on corrugated metal or metal deck roof)	**Scenario B** (Flush-to-roof installation on tiled roof)	**Scenario C** (Raked installation on flat roof < 5° pitch)	**Scenario D** (Raked installation on pitched corrugated metal or metal deck roof)
Monocrystalline modules	$.....	$.....	$.....	$.....
Multicrystalline/polycrystalline modules	$.....	$.....	$.....	$.....
Rigid amorphous modules	$.....	$.....	$.....	$.....
Flexible amorphous modules	$.....	$.....	$.....	$.....

4. INSTALLATION, COMMISSIONING & TESTING

Technology	**Scenario**			
	Scenario A (Flush-to-roof installation on corrugated metal or metal deck roof)	**Scenario B** (Flush-to-roof installation on tiled roof)	**Scenario C** (Raked installation on flat roof < 5° pitch)	**Scenario D** (Raked installation on pitched corrugated metal or metal deck roof)
Monocrystalline modules	$.....	$.....	$.....	$.....
Multicrystalline/polycrystalline modules	$.....	$.....	$.....	$.....
Rigid amorphous modules	$.....	$.....	$.....	$.....
Flexible amorphous modules	$.....	$.....	$.....	$.....

5. PLANNING APPROVAL

Planning Approval	**Scenario**			
	Scenario A (Flush-to-roof installation on corrugated metal or metal deck roof)	**Scenario B** (Flush-to-roof installation on tiled roof)	**Scenario C** (Raked installation on flat roof < 5° pitch)	**Scenario D** (Raked installation on pitched corrugated metal or metal deck roof)
Planning Approval	$.....	$.....	$.....	$.....

6. SITE INSPECTION, TRAVEL & ACCOMMODATION AND DELIVERY

NSW Region	Item to Tender		
	Site Inspection	**Travel & Accommodation**	**Delivery**
Greater Sydney Metropolitan	$.....	$.....	$.....
North Coast	$.....	$.....	$.....
New England	$.....	$.....	$.....
South East	$.....	$.....	$.....
Riverina	$.....	$.....	$.....
Western NSW	$.....	$.....	$.....

7. FINAL PRICING OF COMPLETE WORKS AND OBLIGATIONS (ITEMS 1-6)

Technology by NSW Region	Scenario			
Monocrystalline Technology	**Scenario A**	**Scenario B**	**Scenario C**	**Scenario D**
Greater Sydney Metropolitan	$.....	$.....	$.....	$.....
North Coast	$.....	$.....	$.....	$.....
New England	$.....	$.....	$.....	$.....
South East	$.....	$.....	$.....	$.....
Riverina	$.....	$.....	$.....	$.....
Western NSW	$.....	$.....	$.....	$.....
Multicrystalline/Polycrystalline Technology	**Scenario A**	**Scenario B**	**Scenario C**	**Scenario D**
Greater Sydney Metropolitan	$.....	$.....	$.....	$.....
North Coast	$.....	$.....	$.....	$.....
New England	$.....	$.....	$.....	$.....
South East	$.....	$.....	$.....	$.....
Riverina	$.....	$.....	$.....	$.....
Western NSW	$.....	$.....	$.....	$.....
Rigid Amorphous Technology	**Scenario A**	**Scenario B**	**Scenario C**	**Scenario D**
Greater Sydney Metropolitan	$.....	$.....	$.....	$.....
North Coast	$.....	$.....	$.....	$.....
New England	$.....	$.....	$.....	$.....
South East	$.....	$.....	$.....	$.....
Riverina	$.....	$.....	$.....	$.....
Western NSW	$.....	$.....	$.....	$.....
Flexible Amorphous Technology	**Scenario A**	**Scenario B**	**Scenario C**	**Scenario D**
Greater Sydney Metropolitan	$.....	$.....	$.....	$.....
North Coast	$.....	$.....	$.....	$.....
New England	$.....	$.....	$.....	$.....
South East	$.....	$.....	$.....	$.....

Technology by NSW Region	Scenario			
Riverina	$.....	$.....	$.....	$.....
Western NSW	$.....	$.....	$.....	$.....

SCHEDULE OF OPTIONAL ADDITIONS

Supply and installation of the following items:

Item	Description	Price Excl GST ($)
1	12 year maintenance as per Clause 10 of the technical specification to NSW region: Greater Sydney Metropolitan North Coast New England South East Riverina Western NSW	 $..... $..... $..... $..... $..... $.....
2	Large electronic sign displaying PV system performance and containing as a minimum: • Cumulative energy generation (kWh) • Cumulative CO_2 reduction (kg)	$.....
3	Wireless communication device for monitoring PV system performance	$.....
4	A scrolling LED display	$.....
5	An LCD screen	$.....
6	Electrical metering for billing purposes to NSW region:	$.....
7	Hourly Labour Rate ($/hour)	$.....
8	Discount for Government Agencies surrendering RECs to Contractor	$.....

SCHEDULE OF RATES

Supply and installation of the following items:

Item	Description	Unit	Price Excl GST ($)
1	D.C. cabling in excess of the 20 metre allowance	Per Metre	$.....
2	A.C. cabling in excess of the 20 metre allowance	Per Metre	$.....
4	Cat5e data cabling in excess of the 20 metre allowance	Per Metre	$.....
5	Ducting and flexible conduit in excess of the 20 metre allowance	Per Metre	$.....
6	New load centre where insufficient spare poles available on nearest electrical distribution board	Each	$.....
7	Additional electrical work / wiring upgrade	Per Hour	$.....
8	Planning approval for Scenarios A & B if Complying Development certificate is required	Each	$.....

TOTAL MINIMUM RATED CAPACITY OF 2 KILOWATTS PEAK

The lump sums tendered shall form part of the contract. The amounts shall be used to assess tenders. Items shall comply with the technical specification. Prices in the schedule must allow for materials, demolitions, waste, transport, labour, overheads and profit. **Prices shall exclude GST and RECS shall be retained by the purchaser**.

1. PHOTOVOLTAIC MODULES

Technology	Price ($)
Monocrystalline photovoltaic modules	$.....
Multicrystalline/polycrystalline photovoltaic modules	$.....
Rigid amorphous photovoltaic modules	$.....
Flexible amorphous photovoltaic modules	$.....

2. BASE SYSTEM

Item to Tender	Price ($)
Grid-Connect Inverter	$.....
Data-Logger	$.....
DC Switchgear	$.....
AC Switchgear	$.....
DC Combiner Box	$.....
AC Cable (20 meters in length)	$.....
DC Cable (20 meters in length)	$.....
Cat5e Data Cable (20 meters in length)	$.....
Ducting for DC Cabling (20 meters in length)	$.....
Flexible PVC Conduit for AC/DC/Cat5e Cabling (20 meters in length)	$.....
Lockable Cabinet for Inverter Station	$.....
Site Installation Report, Training and Documentation	$.....
All work and obligations under the contract NOT INCLUDED ELSEWHERE in this schedule. Tenderers must provide detailed costings below.	
	$.....
	$.....
SUBTOTAL	**$.....**

3. MOUNTING SYSTEM (SUPPLY ONLY)

Technology	**Scenario**			
	Scenario A (Flush-to-roof installation on corrugated metal or metal deck roof)	**Scenario B** (Flush-to-roof installation on tiled roof)	**Scenario C** (Raked installation on flat roof < 5° pitch)	**Scenario D** (Raked installation on pitched corrugated metal or metal deck roof)
Monocrystalline modules	$.....	$.....	$.....	$.....
Multicrystalline/polycrystalline modules	$.....	$.....	$.....	$.....
Rigid amorphous modules	$.....	$.....	$.....	$.....
Flexible amorphous modules	$.....	$.....	$.....	$.....

4. INSTALLATION, COMMISSIONING & TESTING

Technology	**Scenario**			
	Scenario A (Flush-to-roof installation on corrugated metal or metal deck roof)	**Scenario B** (Flush-to-roof installation on tiled roof)	**Scenario C** (Raked installation on flat roof < 5° pitch)	**Scenario D** (Raked installation on pitched corrugated metal or metal deck roof)
Monocrystalline modules	$.....	$.....	$.....	$.....
Multicrystalline/polycrystalline modules	$.....	$.....	$.....	$.....
Rigid amorphous modules	$.....	$.....	$.....	$.....
Flexible amorphous modules	$.....	$.....	$.....	$.....

5. PLANNING APPROVAL

Planning Approval	**Scenario**			
	Scenario A (Flush-to-roof installation on corrugated metal or metal deck roof)	**Scenario B** (Flush-to-roof installation on tiled roof)	**Scenario C** (Raked installation on flat roof < 5° pitch)	**Scenario D** (Raked installation on pitched corrugated metal or metal deck roof)
Planning Approval	$.....	$.....	$.....	$.....

6. SITE INSPECTION, TRAVEL & ACCOMMODATION AND DELIVERY

NSW Region	Item to Tender		
	Site Inspection	**Travel & Accommodation**	**Delivery**
Greater Sydney Metropolitan	$.....	$.....	$.....
North Coast	$.....	$.....	$.....
New England	$.....	$.....	$.....
South East	$.....	$.....	$.....
Riverina	$.....	$.....	$.....
Western NSW	$.....	$.....	$.....

7. FINAL PRICING OF COMPLETE WORKS AND OBLIGATIONS (ITEMS 1-6)

Technology by NSW Region	Scenario			
Monocrystalline Technology	**Scenario A**	**Scenario B**	**Scenario C**	**Scenario D**
Greater Sydney Metropolitan	$.....	$.....	$.....	$.....
North Coast	$.....	$.....	$.....	$.....
New England	$.....	$.....	$.....	$.....
South East	$.....	$.....	$.....	
Riverina	$.....	$.....	$.....	$.....
Western NSW	$.....	$.....	$.....	$.....
Multicrystalline/Polycrystalline Technology	**Scenario A**	**Scenario B**	**Scenario C**	**Scenario D**
Greater Sydney Metropolitan	$.....	$.....	$.....	$.....
North Coast	$.....	$.....	$.....	$.....
New England	$.....	$.....	$.....	$.....
South East	$.....	$.....	$.....	
Riverina	$.....	$.....	$.....	$.....
Western NSW	$.....	$.....	$.....	$.....
Rigid Amorphous Technology	**Scenario A**	**Scenario B**	**Scenario C**	**Scenario D**
Greater Sydney Metropolitan	$.....	$.....	$.....	$.....
North Coast	$.....	$.....	$.....	$.....
New England	$.....	$.....	$.....	$.....
South East	$.....	$.....	$.....	
Riverina	$.....	$.....	$.....	$.....
Western NSW	$.....	$.....	$.....	$.....
Flexible Amorphous Technology	**Scenario A**	**Scenario B**	**Scenario C**	**Scenario D**
Greater Sydney Metropolitan	$.....	$.....	$.....	$.....
North Coast	$.....	$.....	$.....	$.....
New England	$.....	$.....	$.....	$.....
South East	$.....	$.....	$.....	

Technology by NSW Region	Scenario			
Riverina	$.....	$.....	$.....	$.....
Western NSW	$.....	$.....	$.....	$.....

SCHEDULE OF OPTIONAL ADDITIONS

Supply and installation of the following items:

Item	Description	Price Excl GST ($)
1	12 year maintenance as per Clause 10 of the technical specification to NSW region: Greater Sydney Metropolitan North Coast New England South East Riverina Western NSW	 $..... $..... $..... $..... $..... $.....
2	Large electronic sign displaying PV system performance and containing as a minimum: • Cumulative energy generation (kWh) • Cumulative CO_2 reduction (kg)	$.....
3	Wireless communication device for monitoring PV system performance	$.....
4	A scrolling LED display	$.....
5	An LCD screen	$.....
6	Electrical metering for billing purposes to NSW region:	$.....
7	Hourly Labour Rate ($/hour)	$.....
8	Discount for Government Agencies surrendering RECs to Contractor (excluding DET)	$.....
9	Discount for DET surrendering RECs to Contractor	$.....

SCHEDULE OF RATES

Supply and installation of the following items:

Item	Description	Unit	Price Excl GST ($)
1	D.C. cabling in excess of the 20 metre allowance	Per Metre	$.....
2	A.C. cabling in excess of the 20 metre allowance	Per Metre	$.....
4	Cat5e data cabling in excess of the 20 metre allowance	Per Metre	$.....
5	Ducting and flexible conduit in excess of the 20 metre allowance	Per Metre	$.....
6	New load centre where insufficient spare poles available on nearest electrical distribution board	Each	$.....
7	Additional electrical work / wiring upgrade	Per Hour	$.....
8	Planning approval for Scenarios A & B if Complying Development certificate is required	Each	$.....

TOTAL MINIMUM RATED CAPACITY OF 3 KILOWATTS PEAK

The lump sums tendered shall form part of the contract. The amounts shall be used to assess tenders. Items shall comply with the technical specification. Prices in the schedule must allow for materials, demolitions, waste, transport, labour, overheads and profit. **Prices shall exclude GST and RECS shall be retained by the purchaser**.

1. PHOTOVOLTAIC MODULES

Technology	Price ($)
Monocrystalline photovoltaic modules	$.....
Multicrystalline/polycrystalline photovoltaic modules	$.....
Rigid amorphous photovoltaic modules	$.....
Flexible amorphous photovoltaic modules	$.....

2. BASE SYSTEM

Item to Tender	Price ($)
Grid-Connect Inverter	$.....
Data-Logger	$.....
DC Switchgear	$.....
AC Switchgear	$.....
DC Combiner Box	$.....
AC Cable (20 meters in length)	$.....
DC Cable (20 meters in length)	$.....
Cat5e Data Cable (20 meters in length)	$.....
Ducting for DC Cabling (20 meters in length)	$.....
Flexible PVC Conduit for AC/DC/Cat5e Cabling (20 meters in length)	$.....
Lockable Cabinet for Inverter Station	$.....
Site Installation Report, Training and Documentation	$.....
All work and obligations under the contract NOT INCLUDED ELSEWHERE in this schedule. Tenderers must provide detailed costings below.	
	$.....
	$.....
SUBTOTAL	**$.....**

3. MOUNTING SYSTEM (SUPPLY ONLY)

Technology	**Scenario**			
	Scenario A (Flush-to-roof installation on corrugated metal or metal deck roof)	**Scenario B** (Flush-to-roof installation on tiled roof)	**Scenario C** (Raked installation on flat roof < 5° pitch)	**Scenario D** (Raked installation on pitched corrugated metal or metal deck roof)
Monocrystalline modules	$.....	$.....	$.....	$.....
Multicrystalline/polycrystalline modules	$.....	$.....	$.....	$.....
Rigid amorphous modules	$.....	$.....	$.....	$.....
Flexible amorphous modules	$.....	$.....	$.....	$.....

4. INSTALLATION, COMMISSIONING & TESTING

Technology	**Scenario**			
	Scenario A (Flush-to-roof installation on corrugated metal or metal deck roof)	**Scenario B** (Flush-to-roof installation on tiled roof)	**Scenario C** (Raked installation on flat roof < 5° pitch)	**Scenario D** (Raked installation on pitched corrugated metal or metal deck roof)
Monocrystalline modules	$.....	$.....	$.....	$.....
Multicrystalline/polycrystalline modules	$.....	$.....	$.....	$.....
Rigid amorphous modules	$.....	$.....	$.....	$.....
Flexible amorphous modules	$.....	$.....	$.....	$.....

5. PLANNING APPROVAL

Planning Approval	**Scenario**			
	Scenario A (Flush-to-roof installation on corrugated metal or metal deck roof)	**Scenario B** (Flush-to-roof installation on tiled roof)	**Scenario C** (Raked installation on flat roof < 5° pitch)	**Scenario D** (Raked installation on pitched corrugated metal or metal deck roof)
Planning Approval	$.....	$.....	$.....	$.....

6. SITE INSPECTION, TRAVEL & ACCOMMODATION AND DELIVERY

NSW Region	Item to Tender		
	Site Inspection	**Travel & Accommodation**	**Delivery**
Greater Sydney Metropolitan	$.....	$.....	$.....
North Coast	$.....	$.....	$.....
New England	$.....	$.....	$.....
South East	$.....	$.....	$.....
Riverina	$.....	$.....	$.....
Western NSW	$.....	$.....	$.....

7. FINAL PRICING OF COMPLETE WORKS AND OBLIGATIONS (ITEMS 1-6)

Technology by NSW Region	Scenario			
Monocrystalline Technology	**Scenario A**	**Scenario B**	**Scenario C**	**Scenario D**
Greater Sydney Metropolitan	$.....	$.....	$.....	$.....
North Coast	$.....	$.....	$.....	$.....
New England	$.....	$.....	$.....	$.....
South East	$.....	$.....	$.....	
Riverina	$.....	$.....	$.....	$.....
Western NSW	$.....	$.....	$.....	$.....
Multicrystalline/Polycrystalline Technology	**Scenario A**	**Scenario B**	**Scenario C**	**Scenario D**
Greater Sydney Metropolitan	$.....	$.....	$.....	$.....
North Coast	$.....	$.....	$.....	$.....
New England	$.....	$.....	$.....	$.....
South East	$.....	$.....	$.....	
Riverina	$.....	$.....	$.....	$.....
Western NSW	$.....	$.....	$.....	$.....
Rigid Amorphous Technology	**Scenario A**	**Scenario B**	**Scenario C**	**Scenario D**
Greater Sydney Metropolitan	$.....	$.....	$.....	$.....
North Coast	$.....	$.....	$.....	$.....
New England	$.....	$.....	$.....	$.....
South East	$.....	$.....	$.....	
Riverina	$.....	$.....	$.....	$.....
Western NSW	$.....	$.....	$.....	$.....
Flexible Amorphous Technology	**Scenario A**	**Scenario B**	**Scenario C**	**Scenario D**
Greater Sydney Metropolitan	$.....	$.....	$.....	$.....
North Coast	$.....	$.....	$.....	$.....
New England	$.....	$.....	$.....	$.....
South East	$.....	$.....	$.....	

Technology by NSW Region	Scenario			
Riverina	$.....	$.....	$.....	$.....
Western NSW	$.....	$.....	$.....	$.....

SCHEDULE OF OPTIONAL ADDITIONS

Supply and installation of the following items:

Item	Description	Price Excl GST ($)
1	12 year maintenance as per Clause 10 of the technical specification to NSW region: Greater Sydney Metropolitan North Coast New England South East Riverina Western NSW	 $..... $..... $..... $..... $..... $.....
2	Large electronic sign displaying PV system performance and containing as a minimum: • Cumulative energy generation (kWh) • Cumulative CO_2 reduction (kg)	$.....
3	Wireless communication device for monitoring PV system performance	$.....
4	A scrolling LED display	$.....
5	An LCD screen	$.....
6	Electrical metering for billing purposes to NSW region:	$.....
7	Hourly Labour Rate ($/hour)	$.....
8	Discount for Government Agencies surrendering RECs to Contractor (excluding DET)	$.....
9	Discount for DET surrendering RECs to Contractor	$.....

SCHEDULE OF RATES

Supply and installation of the following items:

Item	Description	Unit	Price Excl GST ($)
1	D.C. cabling in excess of the 20 metre allowance	Per Metre	$.....
2	A.C. cabling in excess of the 20 metre allowance	Per Metre	$.....
4	Cat5e data cabling in excess of the 20 metre allowance	Per Metre	$.....
5	Ducting and flexible conduit in excess of the 20 metre allowance	Per Metre	$.....
6	New load centre where insufficient spare poles available on nearest electrical distribution board	Each	$.....
7	Additional electrical work / wiring upgrade	Per Hour	$.....
8	Planning approval for Scenarios A & B if Complying Development certificate is required	Each	$.....

TOTAL MINIMUM RATED CAPACITY OF 4 KILOWATTS PEAK

The lump sums tendered shall form part of the contract. The amounts shall be used to assess tenders. Items shall comply with the technical specification. Prices in the schedule must allow for materials, demolitions, waste, transport, labour, overheads and profit. **Prices shall exclude GST and RECS shall be retained by the purchaser**.

1. PHOTOVOLTAIC MODULES

Technology	Price ($)
Monocrystalline photovoltaic modules	$.....
Multicrystalline/polycrystalline photovoltaic modules	$.....
Rigid amorphous photovoltaic modules	$.....
Flexible amorphous photovoltaic modules	$.....

2. BASE SYSTEM

Item to Tender	Price ($)
Grid-Connect Inverter	$.....
Data-Logger	$.....
DC Switchgear	$.....
AC Switchgear	$.....
DC Combiner Box	$.....
AC Cable (20 meters in length)	$.....
DC Cable (20 meters in length)	$.....
Cat5e Data Cable (20 meters in length)	$.....
Ducting for DC Cabling (20 meters in length)	$.....
Flexible PVC Conduit for AC/DC/Cat5e Cabling (20 meters in length)	$.....
Lockable Cabinet for Inverter Station	$.....
Site Installation Report, Training and Documentation	$.....
All work and obligations under the contract NOT INCLUDED ELSEWHERE in this schedule. Tenderers must provide detailed costings below.	
	$.....
	$.....
SUBTOTAL	**$.....**

3. MOUNTING SYSTEM (SUPPLY ONLY)

Technology	**Scenario**			
	Scenario A (Flush-to-roof installation on corrugated metal or metal deck roof)	**Scenario B** (Flush-to-roof installation on tiled roof)	**Scenario C** (Raked installation on flat roof < 5° pitch)	**Scenario D** (Raked installation on pitched corrugated metal or metal deck roof)
Monocrystalline modules	$.....	$.....	$.....	$.....
Multicrystalline/polycrystalline modules	$.....	$.....	$.....	$.....
Rigid amorphous modules	$.....	$.....	$.....	$.....
Flexible amorphous modules	$.....	$.....	$.....	$.....

4. INSTALLATION, COMMISSIONING & TESTING

Technology	**Scenario**			
	Scenario A (Flush-to-roof installation on corrugated metal or metal deck roof)	**Scenario B** (Flush-to-roof installation on tiled roof)	**Scenario C** (Raked installation on flat roof < 5° pitch)	**Scenario D** (Raked installation on pitched corrugated metal or metal deck roof)
Monocrystalline modules	$.....	$.....	$.....	$.....
Multicrystalline/polycrystalline modules	$.....	$.....	$.....	$.....
Rigid amorphous modules	$.....	$.....	$.....	$.....
Flexible amorphous modules	$.....	$.....	$.....	$.....

5. PLANNING APPROVAL

Planning Approval	**Scenario**			
	Scenario A (Flush-to-roof installation on corrugated metal or metal deck roof)	**Scenario B** (Flush-to-roof installation on tiled roof)	**Scenario C** (Raked installation on flat roof < 5° pitch)	**Scenario D** (Raked installation on pitched corrugated metal or metal deck roof)
Planning Approval	$.....	$.....	$.....	$.....

6. SITE INSPECTION, TRAVEL & ACCOMMODATION AND DELIVERY

NSW Region	Item to Tender		
	Site Inspection	**Travel & Accommodation**	**Delivery**
Greater Sydney Metropolitan	$.....	$.....	$.....
North Coast	$.....	$.....	$.....
New England	$.....	$.....	$.....
South East	$.....	$.....	$.....
Riverina	$.....	$.....	$.....
Western NSW	$.....	$.....	$.....

7. FINAL PRICING OF COMPLETE WORKS AND OBLIGATIONS (ITEMS 1-6)

Technology by NSW Region	Scenario			
Monocrystalline Technology	**Scenario A**	**Scenario B**	**Scenario C**	**Scenario D**
Greater Sydney Metropolitan	$.....	$.....	$.....	$.....
North Coast	$.....	$.....	$.....	$.....
New England	$.....	$.....	$.....	$.....
South East	$.....	$.....	$.....	
Riverina	$.....	$.....	$.....	$.....
Western NSW	$.....	$.....	$.....	$.....
Multicrystalline/Polycrystalline Technology	**Scenario A**	**Scenario B**	**Scenario C**	**Scenario D**
Greater Sydney Metropolitan	$.....	$.....	$.....	$.....
North Coast	$.....	$.....	$.....	$.....
New England	$.....	$.....	$.....	$.....
South East	$.....	$.....	$.....	
Riverina	$.....	$.....	$.....	$.....
Western NSW	$.....	$.....	$.....	$.....
Rigid Amorphous Technology	**Scenario A**	**Scenario B**	**Scenario C**	**Scenario D**
Greater Sydney Metropolitan	$.....	$.....	$.....	$.....
North Coast	$.....	$.....	$.....	$.....
New England	$.....	$.....	$.....	$.....
South East	$.....	$.....	$.....	
Riverina	$.....	$.....	$.....	$.....
Western NSW	$.....	$.....	$.....	$.....
Flexible Amorphous Technology	**Scenario A**	**Scenario B**	**Scenario C**	**Scenario D**
Greater Sydney Metropolitan	$.....	$.....	$.....	$.....
North Coast	$.....	$.....	$.....	$.....
New England	$.....	$.....	$.....	$.....
South East	$.....	$.....	$.....	

Technology by NSW Region	Scenario			
Riverina	$.....	$.....	$.....	$.....
Western NSW	$.....	$.....	$.....	$.....

SCHEDULE OF OPTIONAL ADDITIONS

Supply and installation of the following items:

Item	Description	Price Excl GST ($)
1	12 year maintenance as per Clause 10 of the technical specification to NSW region: Greater Sydney Metropolitan North Coast New England South East Riverina Western NSW	 $..... $..... $..... $..... $..... $.....
2	Large electronic sign displaying PV system performance and containing as a minimum: • Cumulative energy generation (kWh) • Cumulative CO_2 reduction (kg)	$.....
3	Wireless communication device for monitoring PV system performance	$.....
4	A scrolling LED display	$.....
5	An LCD screen	$.....
6	Electrical metering for billing purposes to NSW region:	$.....
7	Hourly Labour Rate ($/hour)	$.....
8	Discount for Government Agencies surrendering RECs to Contractor (excluding DET)	$.....
9	Discount for DET surrendering RECs to Contractor	$.....

SCHEDULE OF RATES

Supply and installation of the following items:

Item	Description	Unit	Price Excl GST ($)
1	D.C. cabling in excess of the 20 metre allowance	Per Metre	$.....
2	A.C. cabling in excess of the 20 metre allowance	Per Metre	$.....
4	Cat5e data cabling in excess of the 20 metre allowance	Per Metre	$.....
5	Ducting and flexible conduit in excess of the 20 metre allowance	Per Metre	$.....
6	New load centre where insufficient spare poles available on nearest electrical distribution board	Each	$.....
7	Additional electrical work / wiring upgrade	Per Hour	$.....
8	Planning approval for Scenarios A & B if Complying Development certificate is required	Each	$.....

TOTAL MINIMUM RATED CAPACITY OF 5 KILOWATTS PEAK

The lump sums tendered shall form part of the contract. The amounts shall be used to assess tenders. Items shall comply with the technical specification. Prices in the schedule must allow for materials, demolitions, waste, transport, labour, overheads and profit. **Prices shall exclude GST and RECS shall be retained by the purchaser**.

1. PHOTOVOLTAIC MODULES

Technology	Price ($)
Monocrystalline photovoltaic modules	$.....
Multicrystalline/polycrystalline photovoltaic modules	$.....
Rigid amorphous photovoltaic modules	$.....
Flexible amorphous photovoltaic modules	$.....

2. BASE SYSTEM

Item to Tender	Price ($)
Grid-Connect Inverter	$.....
Data-Logger	$.....
DC Switchgear	$.....
AC Switchgear	$.....
DC Combiner Box	$.....
AC Cable (20 meters in length)	$.....
DC Cable (20 meters in length)	$.....
Cat5e Data Cable (20 meters in length)	$.....
Ducting for DC Cabling (20 meters in length)	$.....
Flexible PVC Conduit for AC/DC/Cat5e Cabling (20 meters in length)	$.....
Lockable Cabinet for Inverter Station	$.....
Site Installation Report, Training and Documentation	$.....
All work and obligations under the contract NOT INCLUDED ELSEWHERE in this schedule. Tenderers must provide detailed costings below.	
	$.....
	$.....
SUBTOTAL	**$.....**

3. MOUNTING SYSTEM (SUPPLY ONLY)

Technology	**Scenario**			
	Scenario A (Flush-to-roof installation on corrugated metal or metal deck roof)	**Scenario B** (Flush-to-roof installation on tiled roof)	**Scenario C** (Raked installation on flat roof < 5° pitch)	**Scenario D** (Raked installation on pitched corrugated metal or metal deck roof)
Monocrystalline modules	$.....	$.....	$.....	$.....
Multicrystalline/polycrystalline modules	$.....	$.....	$.....	$.....
Rigid amorphous modules	$.....	$.....	$.....	$.....
Flexible amorphous modules	$.....	$.....	$.....	$.....

4. INSTALLATION, COMMISSIONING & TESTING

Technology	**Scenario**			
	Scenario A (Flush-to-roof installation on corrugated metal or metal deck roof)	**Scenario B** (Flush-to-roof installation on tiled roof)	**Scenario C** (Raked installation on flat roof < 5° pitch)	**Scenario D** (Raked installation on pitched corrugated metal or metal deck roof)
Monocrystalline modules	$.....	$.....	$.....	$.....
Multicrystalline/polycrystalline modules	$.....	$.....	$.....	$.....
Rigid amorphous modules	$.....	$.....	$.....	$.....
Flexible amorphous modules	$.....	$.....	$.....	$.....

5. PLANNING APPROVAL

Planning Approval	**Scenario**			
	Scenario A (Flush-to-roof installation on corrugated metal or metal deck roof)	**Scenario B** (Flush-to-roof installation on tiled roof)	**Scenario C** (Raked installation on flat roof < 5° pitch)	**Scenario D** (Raked installation on pitched corrugated metal or metal deck roof)
Planning Approval	$.....	$.....	$.....	$.....

6. SITE INSPECTION, TRAVEL & ACCOMMODATION AND DELIVERY

NSW Region	Item to Tender		
	Site Inspection	**Travel & Accommodation**	**Delivery**
Greater Sydney Metropolitan	$.....	$.....	$.....
North Coast	$.....	$.....	$.....
New England	$.....	$.....	$.....
South East	$.....	$.....	$.....
Riverina	$.....	$.....	$.....
Western NSW	$.....	$.....	$.....

7. FINAL PRICING OF COMPLETE WORKS AND OBLIGATIONS (ITEMS 1-6)

Technology by NSW Region	Scenario			
Monocrystalline Technology	**Scenario A**	**Scenario B**	**Scenario C**	**Scenario D**
Greater Sydney Metropolitan	$.....	$.....	$.....	$.....
North Coast	$.....	$.....	$.....	$.....
New England	$.....	$.....	$.....	$.....
South East	$.....	$.....	$.....	
Riverina	$.....	$.....	$.....	$.....
Western NSW	$.....	$.....	$.....	$.....
Multicrystalline/Polycrystalline Technology	**Scenario A**	**Scenario B**	**Scenario C**	**Scenario D**
Greater Sydney Metropolitan	$.....	$.....	$.....	$.....
North Coast	$.....	$.....	$.....	$.....
New England	$.....	$.....	$.....	$.....
South East	$.....	$.....	$.....	
Riverina	$.....	$.....	$.....	$.....
Western NSW	$.....	$.....	$.....	$.....
Rigid Amorphous Technology	**Scenario A**	**Scenario B**	**Scenario C**	**Scenario D**
Greater Sydney Metropolitan	$.....	$.....	$.....	$.....
North Coast	$.....	$.....	$.....	$.....
New England	$.....	$.....	$.....	$.....
South East	$.....	$.....	$.....	
Riverina	$.....	$.....	$.....	$.....
Western NSW	$.....	$.....	$.....	$.....
Flexible Amorphous Technology	**Scenario A**	**Scenario B**	**Scenario C**	**Scenario D**
Greater Sydney Metropolitan	$.....	$.....	$.....	$.....
North Coast	$.....	$.....	$.....	$.....
New England	$.....	$.....	$.....	$.....
South East	$.....	$.....	$.....	

Technology by NSW Region	Scenario			
Riverina	$.....	$.....	$.....	$.....
Western NSW	$.....	$.....	$.....	$.....

SCHEDULE OF OPTIONAL ADDITIONS

Supply and installation of the following items:

Item	Description	Price Excl GST ($)
1	12 year maintenance as per Clause 10 of the technical specification to NSW region: Greater Sydney Metropolitan North Coast New England Riverina South East Western NSW	 $..... $..... $..... $..... $..... $.....
2	Large electronic sign displaying PV system performance and containing as a minimum: • Cumulative energy generation (kWh) • Cumulative CO_2 reduction (kg)	$.....
3	Wireless communication device for monitoring PV system performance	$.....
4	A scrolling LED display	$.....
5	An LCD screen	$.....
6	Electrical metering for billing purposes to NSW region:	$.....
7	Hourly Labour Rate ($/hour)	$.....
8	Discount for Government Agencies surrendering RECs to Contractor	$.....

SCHEDULE OF RATES

Supply and installation of the following items:

Item	Description	Unit	Price Excl GST ($)
1	D.C. cabling in excess of the 20 metre allowance	Per Metre	$.....
2	A.C. cabling in excess of the 20 metre allowance	Per Metre	$.....
4	Cat5e data cabling in excess of the 20 metre allowance	Per Metre	$.....
5	Ducting and flexible conduit in excess of the 20 metre allowance	Per Metre	$.....
6	New load centre where insufficient spare poles available on nearest electrical distribution board	Each	$.....
7	Additional electrical work / wiring upgrade	Per Hour	$.....
8	Planning approval for Scenarios A & B if Complying Development certificate is required	Each	$.....

Part C3 Acknowledgment And Confirmation Of Tender

Note to tenderers: If submitting a hard copy Tender, execute cl. 14.4. If submitting an electronic Tender, only complete cl. 14.5.

1 Lodgement of a Tender will itself be an acknowledgment and representation by you that you are aware of the requirements of the Code; that you will comply with the Code; and that you agree to report to the Board any breaches of the Code for the duration of the agreement.

2 I affirm that this is my Tender to supply the Deliverables sought in the RFT at the prices tendered, and in accordance with the conditions of the RFT except as expressly amended in my Tender, and that the information given in my Tender is correct:

_____

Print Name and Title

_____

Signature of tenderer (if an individual, as identified in clause 12)

or

_____

Signature of authorised officer of tenderer (as identified in clause 12)

or

_____

Signature of partner completing tender on behalf of partnership (as identified in clause 12)

3. If submitting an electronic Tender, do you acknowledge and accept that electronic submission in accordance with the requirements of the RFT and any conditions of the NSW Department of Commerce tenders web site is sufficient to verify and affirm that this is your Tender to supply the Deliverables at the prices tendered on the conditions contained in Part D, except as expressly amended in your Tender and that the information contained in your Tender is correct?

   Note that such acknowledgment and acceptance is a necessary prerequisite to consideration of your Tender.

   Yes/No

_____

Print Name and Title

NSW Department of Commerce

NSW Procurement – Contracting Services is a Business Unit of the NSW Department of Commerce

Dated: <Insert Date>

NSW STATE CONTRACTS CONTROL BOARD

and

<Insert Contractor name>

AGREEMENT (REQUEST FOR TENDER, PART D) FOR

0801890 - Solar Power Systems

COPYRIGHT

This Request for Tender document ("RFT") has been prepared by NSW Procurement – Contracting Services for the State Contracts Control Board for and on behalf of the Crown in right of the State of New South Wales. This RFT is protected by Crown copyright.

© State of New South Wales – NSW Procurement – Contracting Services, for and on behalf of the Crown in right of the State of New South Wales, 2001.

All rights reserved. No part of this RFT may be produced by any process, electronic or otherwise, in any material form or transmitted to any other person or stored electronically in any form, without the prior written permission of the State of New South Wales, except as permitted under the *Copyright Act 1968.*

For the purposes of this RFT, inquiries should be directed to the Contact Officer nominated in Part B of this RFT.

Other matters should be directed to:

Group General Manager
NSW Procurement – Contracting Services
NSW Department of Commerce
McKell Building
2-24 Rawson Place
Sydney NSW 2000
Tel: (02) 9372 8840
Fax: (02) 9372 7533

Table of Contents

Table of Contents **3**

1	Interpretation	4
2	Term	10
3	Formation	10
4	The Deliverables	12
5	Pricing	12
6	Payment	15
7	Variations	17
8	Delivery	17
9	Management Fee	19
10	Confidentiality	22
11	Intellectual Property	23
12	Specific Obligations of Contractor	23
13	Performance Management	27
14	Personnel	29
15	Conduct and Dispute Management	30
16	Termination by the Board	31
17	Termination by Customer	32
18	General	33

Schedule 1 Agreement Details **36**

Schedule 2 Statement of Requirements **38**

Schedule 3 Pricing, Price Variation Mechanism, and List of Products **39**

Schedule 4 Deed of Confidentiality **40**

Schedule 5 Management Fee Audit Confidential Disclosure Deed of Agreement **46**

Schedule 6 smartbuy® Requirements **48**

Schedule 7 Performance Management **54**

Schedule 8 Expert Determination Procedure **56**

EXECUTED AS A DEED **58**

Schedule 9 Financial Security **59**

THIS AGREEMENT executed by DEED is made on the _____ day of _____ 20__

BETWEEN

NEW SOUTH WALES STATE CONTRACTS CONTROL BOARD for and on behalf of the Crown in right of the State of New South Wales, of McKell Building, 2-24 Rawson Place, Sydney, in the State of New South Wales ("the Board").

AND

[.....name of contractor.....] of [.....address.....] in the State of […….] ("the Contractor").

BACKGROUND

A. The Board issued the Request for Tender for the supply of the Deliverables.

B. The Contractor submitted a tender that was accepted by the Board.

C. The Board and the Contractor have agreed to enter into an Agreement for the supply of the Deliverables in the form of this Deed.

NOW THE PARTIES AGREE:

1 Interpretation

1.1 Definitions

"Administrators" means Personnel of the Contractor who are responsible for managing Authorised Users within its organisation and receiving notices sent by the Board for purposes of complying with the Contractor's smartbuy® obligations

"Agreement" means this Deed of Agreement including the Schedules and Part E, Special Conditions of Agreement, where applicable.

Agency Performance Indicator (API) means performance indicators in respect of the Contractor's performance of this Agreement and which are scored by the Customers.

"Applicable Discount" means an applicable discount in Schedule 3 Pricing, as varied from time to time in accordance with this Agreement, or any other Applicable Discount which may be offered by the Contractor from time to time.

"Authorised Users" means Personnel who the Contractor authorises to access and use smartbuy® on its behalf and who are given access to do so by the Board.

"Benchmarker" means the independent company providing price benchmarking services in accordance with clause 5.6 and whose details are indicated in Schedule 1 item 4.

"Board's Material" means any material, document, or Information supplied by the Board, a Customer or any department or agency of the Crown to the Contractor by whatever means.

"Board's Delegate" means the Board's employee named in Schedule 1 item 10 responsible for the overall administration of this Agreement on behalf of the Board.

"Catalogue Information" means details and images and information about the Deliverables and pricing contained in a catalogue placed on smartbuy® by the Contractor or provided by the Contractor to the Board for such placement.

"Category" means generic categories comprising of multiple Products inclusive of the associated services for its supply.

"Change in Control" means a circumstance in which control is or may be exercised over the Contractor:

(a) through removal or appointment of directors of the Contractor;

(b) by virtue of the direct holding of at least 15% of the voting shares in the Contractor or a holding company of the Contractor; or

(c) by any other means whatsoever.

"Circumstances Beyond the Control of the Contractor" include:

(a) acts of God;

(b) fire, flood, or earthquake;

(c) national emergency (including terrorist acts) or war; or

(d) a serious industrial dispute.

"Confidential Information" means, in relation to a Party, information that:

(a) is by its nature confidential;

(b) is designated by that Party as confidential; or

(c) the other Party knows or ought to know is confidential.

"Consequential Loss" means any loss recoverable at law (other than loss arising in the usual course of things) which is:

(a) consequential upon other loss;

(b) a loss of opportunity or goodwill;

(c) a loss of profits;

(d) a loss of anticipated savings or business;

(e) loss of value of any equipment,

and any costs or expenses in connection with the foregoing.

"Contract Material" means New Contract Material and Existing Contract Material.

"Contract Price" means the total amount payable by the Customer to the Contractor for the Deliverables ordered under a Customer Contract and calculated in accordance with clause 5.2.

"Contractor Information" means the information that must be provided by the Contractor in smartbuy® covering its own organisation and that of its Designated and Nominated Subcontractors and includes names, addresses and contact details.

"Contractor's Cost Structure" means the Contractor's overall cost structure comprising of individual cost components for each Category and/or Product listed in Schedule 3.

"Contractor's Insolvency" means any of the following:

(a) insolvency;

(b) the Contractor indicates that it does not have the resources to perform the Agreement or any Customer Contract;

(c) an application for winding up is made and not stayed within 14 days;

(d) a winding up order is made;

(e) a controller, administrator, receiver and manager, provisional liquidator or liquidator is appointed;

(f) a mortgagee enters the possession of any property of the Contractor;

(g) notice is given of a meeting of creditors for the purposes of a deed of arrangement; or

(h) any actions of a similar effect are taken.

"Customer" means the Eligible Customer that places the order with the Contractor under the Agreement.

"Customer Contract" means the contract that is made between the Contractor and a Customer when that Customer places an order.

"Deed" means a form in which a contract or agreement can be recorded which requires execution under the parties' seal.

"Deliverables" means the goods and associated services, the Works or the goods only to be supplied by the Contractor and itemised in Schedule 3.

"Designated Subcontractors" means the comprehensive list of subcontractors, resellers and distributors that the Contractor will use for the purposes of this Agreement and named in smartbuy® as such.

"Eligible Customer" means

(a) any public sector service agency employing staff appointed under the *Public Sector Employment and Management Act 2002* as amended from time to time;

(b) a public body as defined by clause 18(4) of the *Public Sector Management (Goods and Services) Regulation 2000* being:

  (i) a government trading enterprise (including a State owned corporation);

  (ii) a public or private hospital (including an area health service);

  (iii) a local government agency;

  (iv) a charity or other community non-profit organisation;

  (v) a public or private school or a college or university;

  (vi) a public authority of this State, the Commonwealth or of any other State or Territory;

  (vii) a contractor to a public authority (but only in respect of things done as such a contractor);

(c) a Nominee Purchaser provided that it satisfies the requirements of clause 3.6; and

(d) such other persons or entities, which the Board may from time to time in its discretion, determine through a customer registration process.

"Existing Contract Material" means any material which is existing at the date of this Agreement and which may be incorporated in to the New Contract Material.

"Externally Hosted Catalogue" means Catalogue Information hosted in a system other than smartbuy®'s physical infrastructure which is accessible via smartbuy®.

"Free to Desktop" means free delivery to individual floors, departments and sections of a department and is the basis for purchase of products under which the Contractor is responsible for supply, delivery, insurance and off loading of products at the Customer's individual points of acceptance within a building, location, or site.

"FREE-INTO-STORE (FIS)" means free into store and is the basis for purchase of products under which the Contractor is responsible for supply, delivery, insurance and off loading of products at the Customer's premises at the point of acceptance.

"Guaranteed Delivery Time" means the guaranteed time for the supply of the Deliverables as specified in Schedule 2 of this Agreement, or such earlier time as may be agreed by the Customer and the Contractor in respect of a particular Customer Contract.

"Information" includes information in the form of data, text or images.

"Intellectual Property" includes copyright, patent, trademark, design, semi-conductor or circuit layout rights, trade, business or company names, or other proprietary rights, or any rights to registration of such rights existing in Australia, whether created before or after the date of this Agreement.

"Key Performance Indicators" means performance indicators in respect of the Contractor's performance of this Agreement, and which are scored by the Board.

"Key Personnel" means the personnel of the Contractor specified in Schedule 1 item 12.

"Management Fee" means the fee payable by the Contractor to the Board in accordance with clause 9.

"Minimum Order Quantity" means the minimum quantity of each Deliverable ordered by a Customer, given in Order Units.

"New Contract Material" means any material brought into existence as part of, or for the purpose of providing the Products including records, documents and Information stored by any means.

"Nominated Subcontractors" means a subcontractor nominated by the Board that must be used by the Contractor and indicated in smartbuy® as such.

"Nominee Purchaser" means a contractor to a Public Sector Service agency, nominated by the Public Sector Service agency authorised to place Customer Contracts under Agreements for things done as such a contractor and registered by NSW Procurement – Contracting Services.

"NON FREE-INTO-STORE (NFIS)" or **"Ex Factory"** or **"Ex Works"** is the basis for purchase of Deliverables under which the Contractor is responsible only for providing the products in a suitable condition for transport to a single delivery point within the Greater Sydney Metropolitan Area. The Customer is responsible for transport, insurance, unloading and assembly if necessary from the on-line delivery point.

"NSW Procurement – Contracting Services" means a business unit of the NSW Department of Commerce, representing the Board and authorised to arrange and administer contracts on behalf of the Board.

"Order Units" means the unit(s) used when ordering Deliverables from the Contractor. An Order Unit may be "each", "per box", "per carton" or some other unit.

"Overall Performance Indicators" means the holistic performance indicators used by the Board to measure the performance of the Contractor under this Agreement and comprise indicators scored by the Customers (ie.API) and the Board (KPI).

"Payment Period" means each period nominated in item 6 of Schedule 1 or where this Agreement expires or is terminated before the conclusion of one such period, the period up to and including the date of expiration or termination.

"Parties" means the Board, Contractor, and the Customer.

"Personal Information" has the same meaning as in Privacy and Personal Information Protection Act 1998 (NSW).

"Personnel" of a Party means;

(a) the officers, employees, agents and contractors of the Board and the Customer,

(b) in the case of the Contractor, includes subcontractors, resellers, distributors, ie.Designated Sub-Contractors in smartbuy®**;** and

"Price" means the price payable for a Deliverable as set out in Schedule 3 and, where relevant, means the price inclusive of any Applicable Discount specified in Schedule 3.

"Price Schedule" means Schedule 3 to this Agreement and/or variations made to it in accordance with this Agreement.

"Product" means an individual line item within a generic Category of products inclusive of associated services for its supply and delivery.

"Public Service" has the same meaning as that given to it in the *Public Sector Employment and Management Act 2002* (NSW).

"Public Sector Service" has the same meaning as that given to it in the *Public Sector Employment and Management Act 2002* (NSW).

"Relationship Manager" means the Contractor's employee named in Schedule 1 item 12.

"Request for Tender" means the request for tender issued by the Board, consequent to which this Agreement was awarded to the Contractor for the supply of the Deliverables.

"Schedule" means a schedule to this Agreement.

"Security" means the security in the amount and in the form specified by the Principal in its discretion, as set out in item 16 of Schedule 1. For example, the security may take the form of the undertaking in Schedule 9.

"Service Levels" means the service levels which need to be met by the Contractor under this Agreement in accordance with Schedule 7.

"smartbuy®TRADE" means an entry level product for organisations new to eProcurement. It delivers a single source, easy to use, electronic product and service ordering system.

"smartbuy® CONNECT" means the electronic document exchange providing the security, connectivity, transformation, and trading partner management services.

"Statement of Requirements" means the detailed description of the Deliverables to be provided under this Agreement in Schedule 2.

"Standards" means Australian Standards, where such exist and are applicable to the Deliverables, and includes international standards in the event of the lack of an applicable Australian Standard.

"State Contracts Control Board" means the State Contracts Control Board established by the *Public Sector Employment and Management Act 2002* and includes the duly authorised delegates of the Board, including officers of NSW Procurement – Contracting Services.

"**State of New South Wales"** means the Crown in right of the State of New South Wales.

"Statutory Requirements" means the laws relating to the performance of this Agreement or the lawful requirements of any authority with respect to the performance of this Agreement.

"Substantial Breach" means:

(a) in the case of this Agreement and a Customer Contract, a substantial breach of a condition of this Agreement or a Customer Contract by the Contractor and includes any breach of the following clauses:

- (i) clause 3.6.3 (Nominee Purchaser),
- (ii) clauses 5.1 to 5.10 (Pricing),
- (iii) clause 8.3 (Punctual Delivery) without being granted an extension of time under clause 8.4,
- (iv) clause 9 (Management Fee),
- (v) clause 10 (Confidentiality),
- (vi) clause 12.6 (Minimum Insurance Requirements),
- (vii) clause 13.1 (Service Levels),
- (viii) clause 18.1 (No Assignment or Novation); and
- (ix) clause 18.2 (Conflicts of Interests).

"Term" means the period of this Agreement, set out in item 2 Schedule 1 and any extension of the Term in accordance with clause 2.2.

"Transaction" means any use of smartbuy® including sale or purchase of Deliverables available through smartbuy®.

"Transaction Data" means any data created or generated or derived from the use of smartbuy® by any participant in smartbuy® service including any data about the purchase or sale of Deliverables that any participant in smartbuy® makes available or transmits to or through smartbuy® and includes any information which may identify the Customer from the smartbuy® database.

"UNSPSC" means United Nations Standards Products & Services Code, being a coding system which classifies both products and services for use on a global basis.

"Warranty Period" means, in relation to a particular Product, the period of warranty of that Product specified in Schedule 2.

"The Works" means, the Deliverables.

1.2 Rules for interpreting this Agreement

1.2.1 Headings are for convenience only, and do not affect the interpretation. The following rules also apply in interpreting this document, except where the context makes it clear that a rule is not intended to apply.

1.2.2 A reference to:

(a) legislation (including subordinate legislation) is a reference to that legislation as amended, re-enacted or replaced, and includes any subordinate legislation issued under it;

(b) software, document or agreement, or a provision of a document or agreement, is a reference to that document, agreement or provision as amended, supplemented, replaced or novated;

(c) a person includes any type of entity or body of persons whether or not it is incorporated or has a separate legal entity;

(d) any thing (including a right, obligation or concept) includes each part of it.

1.2.3 Where:

(a) the Contractor consists of more than one person or corporation, this Agreement binds each of them separately and any two or more of them jointly and severally;

(b) an obligation, representation or warranty made by the Contractor in this Agreement shall bind each person or corporation separately and jointly and each person or corporation shall alone be responsible for the performance of every obligation, representation or warranty contained in this Agreement.

1.2.4 A singular word includes the plural, and vice versa.

1.2.5 A word which suggests one gender includes the other genders.

1.2.6 If a word is defined, another part of speech of that word has a corresponding meaning.

1.2.7 The Parties may undertake business by the electronic exchange of information and the provisions of this Agreement will be interpreted to give effect to undertaking business in this manner.

1.2.8 In the event of any ambiguity, discrepancy or inconsistency in interpreting any term or terms of this Agreement, the order of priority in the interpretation of such term or terms will be in the order of:

(a) Part E, Special Conditions to this Agreement,

(b) Schedule 6 to this Agreement;

(c) The terms and conditions of this Agreement;

(d) Schedule 1 and 2 to this Agreement;

(e) Any other Schedules to this Agreement;

(f) The Customer Contract;

2 Term

2.1 Duration

2.1.1 This Agreement commences on the commencement date specified in item 2 of Schedule 1 and expires on the expiry date specified in the same item 2, unless sooner terminated in accordance with this Agreement.

2.2 Extension

2.2.1 The Board may in its sole discretion extend this Agreement for the period or periods specified in item 2 of Schedule 1.

3 Formation

3.1 Nature of the Agreement between the Board and the Contractor

3.1.1 This Agreement describes the terms and conditions between the Board and the Contractor under which the Contractor agrees with the Board that it will supply the Deliverables to Customers.

3.1.2 This Agreement together with Part E, Special Conditions constitutes the entire Agreement between the Parties. Any prior arrangements, Agreements, representations or undertakings are superseded.

3.1.3 The Parties agree that any Customer, although not a Party to this Agreement, may take the benefit of, and enforce, this Agreement in its own name.

3.2 No Assurance of Orders and Non-Exclusive Supply

3.2.1 This Agreement does not:

(a) imply that the Contractor will receive any orders for the Deliverables,

(b) imply that the Contractor is the exclusive provider of the Deliverables to the Customer; or

(c) oblige any Customer to place a Customer Contract for the Deliverables with the Contractor.

3.2.2 The Contractor acknowledges that the Board may, from time to time, in its discretion, appoint other suppliers under an agreement to supply the Deliverables and that the Contractor will make no objection to such appointment.

3.3 Customer Contract

3.3.1 The Contractor agrees that each time a Customer places an order a separate Customer Contract is formed. The terms and conditions of the Customer Contract are those appearing in:

(a) this Agreement, any variations thereto, including any Schedules; and

(b) the order.

3.4 Provisions of Agreement to apply to the Customer Contract

3.4.1 The provisions of this Agreement apply to the Customer Contract as if they were repeated in the Customer Contract.

3.4.2 Provided that in respect of the Customer Contract, "Agreement" and "Board" wherever appearing in the clauses described above shall be read as "Customer Contract" and "Customer" respectively.

3.5 Contractor must supply to all Customers

3.5.1 If a Customer enters into a Customer Contract with the Contractor during the Term, the Contractor must supply the required Deliverables to the Customer on the terms and conditions of the Customer Contract and in accordance with this Agreement.

3.6 Nominee Purchasers

Subject to clause 3.6.3, the Contractor must satisfy any Customer Contract placed under this Agreement by a Nominee Purchaser, provided that the Nominee Purchaser provides in its Customer Contract:

(a) its NSW Procurement – Contracting Services Registration Number;

(b) the identity of the Eligible Customer nominating it;

(c) the Agreement Number, name and location of the contract in respect of which the purchase is being made;

(d) a statement that the Deliverables ordered are related to carrying out its obligations with the Eligible Customer; and

(e) any other requirements in clause 8.1.2 of this Agreement applicable to Nominee Purchasers as determined by the Eligible Customer.

3.6.2 If at any time during the Term of this Agreement, the Contractor wishes to restrict its dealings with a Nominee Purchaser, the Contractor shall so request in writing to the Board. The Board may approve the request if there are genuine commercial reasons for the Contractor's request. If approved by the Board, the details of the restrictions will be included in item 3, Schedule 1.

3.6.3 Where the Board does not approve a request of the Contractor under clause 3.6.2 and the Contractor refuses to deal with a Nominee Purchaser, the Board may consider it a Substantial Breach of this Agreement.

3.6.4 The Contractor may at any time lift the restrictions it has sought to be placed on its dealings with a Nominee Purchaser and shall notify the Board accordingly.

3.6.5 If the Contractor makes a supply under the Agreement to an entity purporting to be a Nominee Purchaser, the Contractor is taken to be satisfied that the supply is properly made under this Agreement.

3.7 Supply through Designated and Nominated Subcontractors

3.7.1 The Contractor must supply the Deliverables directly to Eligible Customers or through the Designated and Nominated Subcontractors indicated in smartbuy® in accordance with Schedule 6.

3.7.2 If an order is placed by a Customer on a Designated or Nominated Subcontractor, the Contractor is deemed to have entered into a Contract with the Customer.

3.7.3 The Contractor must ensure that its Designated and Nominated Subcontractors supply the Deliverables in accordance with the terms of this Agreement.

3.7.4 The Contractor must ensure that the Designated Subcontractors in smartbuy® are current and up to date. In the event of a change being required to smartbuy®, as a result of an addition or deletion of a Designated Subcontractor, the Contractor must give notice to the Board within 7 days of such event, in order that smartbuy® can be updated in a manner and format as required by the Board.

3.7.5 The Contractor's obligations under this Agreement are not affected in any way by the supply through Designated and Nominated Subcontractors.

4 The Deliverables

4.1 List of Products and Categories

4.1.1 The Deliverables to be supplied by the Contractor under this Agreement are listed in Schedule 3.

4.2 Variation of Product Description

4.2.1 The Contractor must notify NSW Procurement – Contracting Services in writing as soon as practicable of any variation to the description of a Product offered in Schedule 3.

4.2.2 A variation under clause 4.2.1 may include a variation to the description of the number or name of the Product but excludes a variation:

(a) to the Price of the Product;

(b) that modifies or upgrades the Product; or

(c) that introduces a new Product to the Price Schedule.

4.2.3 NSW Procurement – Contracting Services will notify the Contractor of its acceptance or rejection of the variation to the description of a Product. If the variation is accepted, it shall be taken to be incorporated into Schedule 3.

4.3 Improvements to Products

4.3.1 If during the Term the Contractor makes available on a general commercial basis Products that:

(a) are modified versions or upgrades of a Product; or

(b) have a function or purpose similar to that performed by a Product; or

(c) have a new function or purpose consistent with the nature of the Product,

then the Contractor must offer the Board the same Product under this Agreement within 30 days of such Product being available on a general commercial basis.

4.3.2 The Product offered by the Contractor under clause 4.3.1 will form part of Schedule 3 when the Board notifies its acceptance of the offer. Prior to accepting or rejecting the Contractor's offer, the Board may request the Contractor to provide any further data reasonably required within 14 days to enable the making of an informed decision on the offer. The Contractor must supply the data within the nominated time frame.

4.3.3 In the event that the Board has not notified the Contractor of its acceptance of the Contractor's offer within 30 days, the offer will be deemed not to have been accepted by the Board.

5 Pricing

5.1 Contractor's Obligations

5.1.1 The Contractor must supply the Products on the basis of the Prices in Schedule 3.

5.2 Calculating the Contract Price

5.2.1 The Pricing for the Products in Schedule 3, includes all applicable levies, duties, taxes, insurances, packaging, imposts, overheads and profits, any Applicable Discounts, but is exclusive of GST.

5.3 Conduct of Price Negotiations

5.3.1 The Contractor will not conduct or participate in price negotiations with any Customer to supply the Deliverables at Prices different from those in this Agreement. All negotiations with the Contractor relating to Prices under this Agreement will be conducted by the Board.

5.4 Price Variation

5.4.1 The Contractor may not seek to vary the Price of a Product and/or Category listed in Schedule 3 except in accordance with the frequencies and methodology indicated in Schedule 3. Subject to the Contractor having provided the Board with sufficient documentation to justify the application, and subject to clause 13.1.2(a), the Board may in writing, approve the application within 30 days of lodgement.

5.4.2 Price variations approved by the Board shall apply to all Customer Contracts made on or after the date upon which the Board publishes the varied price on smartbuy®.

5.4.3 Where the Price variation is accepted, Schedule 3 will include the varied Price. The varied Price becomes the basis from which any future applications for Price variations will be calculated.

5.4.4 The Board reserves the right to delete a Product and/or Category from Schedule 3 if it considers a Price variation application to be unreasonable.

5.4.5 Notwithstanding any other provision in this Agreement, the Contractor may apply in writing to the Board to decrease its Prices at any time without any supporting documentation.

5.5 Transparency of the Contractor's Cost Structure

5.5.1 The Parties acknowledge that this Agreement is based on a transparent and open approach to the Contractor's Cost Structure. Where the Contractor's Cost Structure of any Category and/or Product undergoes any change to that specified in Schedule 3, the Contractor must notify the Board within 15 days of the change.

5.5.2 If requested by the Board, the Contractor must provide details of its cost prices and margins, and copies of invoices from its own subcontractors (including any sub suppliers) for specified Categories and/or Products during a specified period and the Contractor must ensure that the Contractor is able to comply with this clause for the Term (including not entering into any confidentiality agreements which prevent compliance with this clause).

5.6 Benchmarking

5.6.1 Throughout the Term of this Agreement the Contractor must ensure that the Price of each Product remains competitive to the prices of the same or similar products available in the market place.

5.6.2 For the purposes of determining whether the Prices under this Agreement are competitive, the Board will at any time after the first anniversary of the Agreement commencement date indicated in Schedule 1 item 2, and at 12 monthly intervals thereafter, engage the services of the Benchmarker indicated in Schedule 1 item 4. The Benchmarker will review whether the Price of those Categories and/or Products in Schedule 3 as nominated by the Board, are competitive when compared to Prices of such Categories and/or Products supplied under comparable arrangements including arrangements for the supply to the private sector.

5.6.3 The Contractor must give proper and considered weight to any recommendation that the Benchmarker may make with respect to whether the Prices are competitive and take prompt appropriate action to vary its Prices.

5.6.4 The costs of the Benchmarker will be based on the rates specified in Schedule 1 item 4 and will be paid for as follows:

(a) Where the Prices of any Services (as nominated by the Board), are higher than the average industry price, the full costs of the Benchmarker must be met by the Contractor;

(b) Where the Prices of any Services (as nominated by the Board), are lower than the average industry price, the full costs of the Benchmarker will be met by the Board.

5.7 Rebates

5.7.1 The Contractor warrants that if at any time during the Term of this Agreement, it receives any rebate, discount, commission or other subsidy on any Product that it purchases from its subcontractors or other third party suppliers, the benefit of such rebate, discount, commission or subsidy will be directly passed on to Customers under this Agreement.

5.8 Bulk Purchase Discounts

5.8.1 If the volume to be purchased by Customers of any Category or Product under this Agreement increases or is anticipated to increase, the Board may negotiate a Price reduction or an increase in the Applicable Discount from the Contractor.

5.8.2 The Parties agree that the new Price or the new Applicable Discount under clause 5.8.1 shall be taken to be a variation of the Agreement in accordance with clause 7.

5.9 Continuous Best Price

5.9.1 Notwithstanding any other clause in this Agreement, where the Board has been able to confirm that the external market pricing for any Product or Category in Schedule 3 is consistently more competitive than under this Agreement, the Board will provide the Contractor with reasonable evidence of such market situation and request the Contractor vary its Prices to align with the market.

5.9.2 Where the Contractor offers more favourable prices to any other purchaser of similar Deliverables in NSW purchased in similar circumstances, including volumes (where Price is volume dependent), timing and terms and conditions where they have a substantial impact on price, it must promptly make the more favourable price available to all Customers entitled to the benefit of this Agreement for future orders, and amend Schedule 3 accordingly. The Contractor must further update its catalogue in smartbuy® to reflect the favourable price.

5.10 Goods and Services Tax

5.10.1 In this clause and Agreement:

"Consideration", **"Tax Invoice"**, **"Taxable Supply"** and **"Supply"** have the same meaning as provided for in the GST Law.

"GST" is a goods and services tax and has the same meaning as in the GST Law.

"GST Law" means any law imposing a GST and includes *A New Tax System (Goods & Services Tax) Act 1999* (Cth) or if that Act does not exist, means any Act imposing, or relating, to a GST and any regulation based on those Acts.

5.10.2 The Contractor must hold an Australian Business Number (ABN) and be registered for GST.

5.10.3 Every invoice issued by a person making a Supply must be in the form of, or be accompanied by, a valid Tax Invoice. No amount is payable until a valid Tax Invoice is received.

5.10.4 If there is any abolition or reduction of any tax, duty, excise or statutory charge associated with the GST, or any change in the GST, the Consideration payable for the Supply must be varied so that the Contractor's net dollar margin for the Supply remains the same.

5.10.5 Any contract entered into by a Party to this Agreement with a third party which involves a Supply being made, the cost of which will affect the cost of any Supply made under or in connection with this Agreement, must include a clause in equivalent terms to clause 5.10.4.

5.10.6 The Parties agree that this clause will apply to the Management Fee payable by the Contractor to the Board.

6 Payment

6.1 Payment of Contract Price

6.1.1 In consideration of the Contractor providing the Deliverables under this Agreement, the Customer shall, subject to the terms and conditions of the Customer Contract, pay the Contractor the Contract Price in the amounts set out in the Customer Contract.

6.1.2 Failure by any Customer to pay the Contract Price at the due time will not be grounds to avoid performance of the Customer Contract.

6.2 Invoices and Time for Payment

6.2.1 All claims for payment made by the Contractor shall be in the form of a Tax Invoice. A claim for payment shall be substantiated by an itemised account and the Contractor shall provide any further details in regard to the account that are reasonably requested by the Customer, including consolidated monthly invoicing on behalf of its branches/business units.

6.2.2 Subject to this clause 6.2, the Customer shall make payment within 30 days from the end of the month after receipt of a valid Tax Invoice and documents necessary to evidence delivery to the Customer.

6.2.3 The parties agree the making of a payment is not intended to be an acknowledgment that the Deliverables have been supplied in accordance with the Customer Contract.

6.2.4 If the Customer disputes an invoice amount the Customer shall certify the amount it believes is due for payment and shall pay that amount and the liability for the balance of payment shall be determined in accordance with the Customer Contract.

6.2.5 The Contractor will not be entitled to any credit charge, service fee or any other fee or charge for extending credit or allowing time for the payment by any Customer of money becoming due for the supply of the Deliverables.

6.3 Set-Off/Money Recoverable by Customer

6.3.1 The Customer may deduct from amounts which may be payable or which may become payable to the Contractor, any amount due from the Contractor to the Customer in connection with the supply of the Deliverables.

6.3.2 Without limiting clause 6.3.1, any damages, costs and expenses recoverable by the Customer from the Contractor in consequence of the Contractor's breach of the Customer Contract may be deducted from money then due to the Contractor under the Customer Contract. If that money is insufficient for that purpose, the balance remaining unpaid will be a debt due by the Contractor to the Customer and may be:

(a) set off against any other money due to the Contractor by the Customer under this or any other Agreement between the Customer and the Contractor; or

(b) recovered from the Contractor by the Customer in an appropriate court.

6.3.3 For the purposes of this clause, the Board may act for and on behalf of any Customer for the purpose of assessing and certifying any damages, losses, costs and expenses sustained or incurred by the Customer as a result of the breach of the Customer Contract.

6.4 Suspension of Payments

Should the Contractor refuse or neglect to carry out the instructions or requirements of the Board in regard to any matter connected with this Agreement, a Customer may, when directed by the Board, suspend all payments to the Contractor until such instructions or requirements have been complied with by the Contractor and in complying with a direction of the Board, the Customer shall not be in breach of this Agreement or any Customer Contract.

6.13.1 The Contractor must provide the Security to the Principal within 7 days of entering into this Agreement with the Principal.

6.13.2 The Principal will hold the Security as security for the due and proper performance and completion of all the obligations of the Contractor under this Agreement and any Customer Contract.

6.13.3 If the Contractor fails to properly perform and complete its obligations under this Agreement or any Customer Contract and the Principal or any Customer suffers loss or damage arising from, or in connection with, such failure by the Contractor, the Principal may deduct any or all such loss or damage (as ascertained and certified by the Principal) from the Security.

6.13.4 If the Security is not sufficient to meet payment of all the loss or damage suffered by the Principal and any Customer, the balance remaining will be a debt due and owing from the Contractor to the Principal and may be recovered by the Principal in any appropriate court.

6.13.5 If the Contractor fails to deposit the Security as requested by the Principal in accordance with clause 6.13.1 the Principal may terminate this Agreement.

6.13.6 The Security must be issued by an Australian domiciled bank, insurance company or other financial institution ("Issuer") acceptable to the Principal in its discretion.

6.13.7 The Contractor agrees that the Principal will have no liability to the Contractor of any nature (whether in negligence or otherwise) for any loss or damage suffered or incurred by the Contractor where the Principal exercises its rights under this clause in good faith.

6.13.8 The Contractor must not take any action to injunct or otherwise prevent the Principal from making a claim or receiving a payment under the Security. This clause does not prevent the Contractor from taking action to recover from the Principal any amount invalidly received by the Principal under any such Security.

6.13.9 The Principal must release the Security to the Contractor (or to whom the Contractor directs) if:

(a) the Contractor has fully performed and discharged all of its obligations under this Agreement and all Customer Contracts; and

(b) in the reasonable opinion of the Principal:

(i) there is no prospect that money or damages will become owing (whether actually or contingently) by the Contractor to the Principal or any Customer; and

(ii) no payment by the Contractor or the provider of the Security is likely to be void, voidable or refundable under any law, including without limitation any law relating to insolvency.

7 Variations

7.1 Variations to Agreement

7.1.1 This Agreement may not be varied except in writing signed by both the Board and the Contractor.

7.1.2 At any time during the Term of this Agreement, the Board may, as variations to this Agreement, negotiate with the Contractor to include new items as Products in Schedule 3, being items which are logical inclusions to the overall Categories covered by this Agreement but were not included in the Board's Request for Tender.

7.2 Restricted Tenders to Increase Contractors

7.2.1 The Board may at any time during the Term of this Agreement, conduct a restricted tender for the purpose of increasing the number of Contractors for Categories covered by the Request for Tender, but not included in this Agreement. Evaluation criteria for such restricted tender will be similar to those used to evaluate the Request for Tender. Should the Contractor be successful in being awarded additional Categories, it will be treated as a variation to this Agreement.

7.2.2 Nothing in clause 7.1.2 allows the variation of this Agreement by the adding of separate Categories and discrete Products within such Category into this Agreement if such Category and or/Product was not included in the Board's Request for Tender.

8 Delivery

8.1 Customer Contracts

8.1.1 The Contractor must not supply the Deliverables unless the Customer issues a Customer Contract. Such Customer Contracts may be made by:

(a) Written request to the Contractor by facsimile, email or by hand, containing the details outlined in clause 8.1.2;

(b) Electronic issue in accordance with the Customer's and/or the Contractor's ordering system and this Agreement;

(c) Any other method required by the Customer which is in keeping with the NSW Government's financial and audit policies.

8.1.2 A Customer Contract in whichever form it is issued, must provide the following details:

(a) a description of the Deliverables;

(b) the Price for the Deliverables;

(c) this Agreement reference number;

(d) delivery date;

(e) delivery site;

(f) name of officer placing the Customer Contract;

(g) NSW Commerce Customer Number; and

(h) address to which the Contractor's invoice is to be sent for payment.

8.1.3 If the Customer Contract is issued in incomplete form, the Contractor must notify the officer placing the Customer Contract of the details required under clause 8.1.2 that have not been provided prior to supply of the Deliverables which are the subject of the Customer Contract.

8.2 Contractor to Fulfil all Customer Contracts

8.2.1 The Contractor must fulfil all Customer Contracts placed by Eligible Customers during the Term in accordance with this Agreement and the Customer Contract.

8.2.2 A Customer may place a single Customer Contract for the Deliverables to be supplied in a single delivery, or a single Customer Contract to be supplied in multiple deliveries, ie. “Blanket Orders”.

8.3 Punctual Delivery

8.3.1 The Contractor must deliver the Products within the specified Guaranteed Delivery Times in Schedule 2, or by the delivery times specified in the Customer Contract.

8.3.2 As soon as practicable after becoming aware of any matter which is likely to change or which has changed the time for delivery, the Contractor must notify the Customer in writing of the circumstances which the Contractor considers will give rise to the delay, and the extent or likely extent of the delay.

8.4 Extension of Time

8.4.1 Where there is likely to be a delay in the Contractor discharging an obligation under this Agreement because of a Circumstance Beyond the Contractor’s Control (other than a circumstance arising out of any act or omission on the part of the Contractor), the Contractor will:

(a) within 3 days of becoming aware of the possibility of such a delay, notify the Customer, in writing of the circumstances which the Contractor considers will give rise to the delay, and the extent or likely extent of the delay and strategies proposed to manage the consequences of the delay; and

(b) request a reasonable extension of time.

8.4.2 The Customer may consent to a request for extension of time under this clause 8.4.2 provided that:

(a) the Contractor uses its best endeavours to minimise the delay and recover lost time; and

(b) where appropriate, the Contractor provides the Customer with a plan indicating in detail the steps the Contractor proposes to take to minimise the impact of the Circumstance Beyond its Control.

8.4.3 The Customer may terminate the Customer Contract in accordance with clause 17.1 if the delay continues beyond the time consented to in this clause 8.4.

8.4.4 The Contractor will not be entitled to any increase in the Contract Price or damages, costs or expenses in connection with the delay.

8.5 Packaging

8.5.1 The Contractor must ensure that all Deliverables are properly, safely and securely packaged and labelled for identification and country of origin.

8.6 Expenses of Delivery

8.6.1 The cost of packaging, freight, insurance and other charges, in connection with the delivery of the Deliverables shall be charged at the rates detailed in the Pricing Schedules. No additional delivery charges are to applied.

8.6.2 The Contractor shall pay all costs associated with the return of wrongly supplied Deliverables or replacement Deliverables are to be paid by the Contractor.

8.7 Delivery and Acceptance

8.7.1 The Contractor must deliver the Deliverables to the place or places and within the Guaranteed Delivery Time and shall obtain a receipt of their delivery.

8.7.2 Delivery and receipt of the Deliverables shall not be taken to be an acceptance of the Products by the Customer.

8.7.3 Delivery may be either Free to Desktop, Free-Into-Store (FIS) throughout NSW and the ACT or Non-Free-Into-Store (NFIS) in accordance with Schedule 2 and in accordance with the Minimum Order Quantity specified by the Customer. Where

the contract is awarded on the basis of NFIS pricing, the Contractor must hand over Products to the third party for delivery, as arranged by the Customer.

8.7.4 If the Contractor is unable to provide the Deliverables for any reason, the Contractor must arrange for the supply of equivalent items from an alternative supplier within the Guaranteed Delivery Time. The Contractor is to liaise with the Customer to ensure that the alternative item is acceptable and meets the Customer's needs. Any additional cost in arranging an alternative supply is to be borne by the Contractor.

8.7.5 The Contractor will replace Deliverables at no cost (including freight and handling charges) where stocks are delivered with unreasonably short use-by dates.

8.8 Rejection of Deliverables

8.8.1 The Customer may reject Deliverables which are not in accordance with the Customer Contract.

8.8.2 Upon rejection of any Deliverables the Customer shall notify the Contractor and may direct that the rejected Deliverables be removed and replaced or rectified at the Contractor's risk and expense within such reasonable time as the Customer may direct.

8.8.3 If the Contractor fails to remove or rectify the rejected Deliverables within the time directed, the Customer may have the rejected Deliverables re-delivered at the Contractor's risk and expense.

8.8.4 Where the Contractor fails to deliver the Deliverables within the Guaranteed Delivery Time, or such other time agreed by the Customer, or where Deliverables are rejected and the Contractor fails to replace the rejected Deliverables in conformity with the Agreement, the Customer may:

(a) purchase from another supplier substitute Deliverables of the kind and quality ordered; or

(b) where it is not possible or practicable to purchase from another supplier substitute Deliverables of the kind and quality ordered, the Customer may purchase Deliverables of a superior kind and quality to the Deliverables under this Agreement.

8.8.5 In both cases listed in clause 8.8.4 any extra cost or expense incurred over and above the Contract Price, shall be a debt due from the Contractor to the Customer.

8.9 Risk and Title

8.9.1 Title in the Deliverables shall pass to the Customer on satisfactory delivery to the Customer, as evidenced by the signature on the delivery docket of a duly authorised representative of the Customer. Such signature is not an acknowledgement of the acceptability of the Deliverables. Notwithstanding that the Customer has taken delivery, the Contractor will remain liable for any loss or damage to the Deliverables, which may have occurred prior to delivery, and for any non-compliance of the Deliverables with the Customer Contract.

9 Management Fee

9.1 Administration of Management Fee

9.1.1 The Contractor must pay to the Board a Management Fee in accordance with this clause.

9.1.2 The Contractor shall act in good faith in respect of all its obligations under this clause 9.1 and shall use its best endeavours to ensure that the obligations imposed on it in relation to the Management Fee are met including ensuring that:

(i) all Eligible Customers use an Order for placing orders for Deliverables;

(ii) the Contractor, its agents, Designated and Nominated Subcontractors sell the Deliverables to Eligible Customers on the terms and conditions of this Agreement.

9.1.3 The Management Fee is the GST-exclusive cost of the Deliverables supplied to a Customer, multiplied by the percentage shown in Item 5 of Schedule 1 (the Management Fee Rate), plus the GST payable on this amount. The Management Fee is payable where the supply of Deliverables to the Customer was made under this Agreement.

9.1.4 The amount of the Management Fee will not under any circumstances be shown as a separate charge in any quote or invoice to a Customer.

9.1.5 The Parties agree that for the purpose of determining if an Order has been placed under this Agreement the following criteria shall apply, whether or not a customer number is quoted:

(i) All New South Wales government departments and agencies are Eligible Customers and are required to place their Orders under this Agreement;

(ii) All other Eligible Customers located in or affiliated with New South Wales, including State owned corporations, councils established under the Local Government Act 1993 and not for profit organisations, will be treated as having placed their Orders under this Agreement unless the Contractor can provide evidence to the satisfaction of the Board that the purchase was made under another contract between the Eligible Customer and the Contractor;

(iii) All Eligible Customers not located in or affiliated with New South Wales, including other State and Territory governments and the Commonwealth, will be treated as having placed their Orders under this Agreement only where they have so advised the Contractor at the time of placing their Order. The Board otherwise bears the onus of establishing that any such orders were placed under this Agreement.

9.1.6 All orders placed by an Eligible Customer (as described in clause 9.1.5(i) and (ii)) for Deliverables, howsoever placed, shall be treated as Orders placed under this Agreement, unless the Contractor can provide evidence to the reasonable satisfaction of the Board that the order was placed under another contract between that Eligible Customer and the Contractor. Further, the Contractor agrees to ensure that all Eligible Customers (as described in clauses 9.1.5(i), (ii), or (iii)) submit an Order in the required form in respect of all Deliverables acquired in accordance with this Agreement.

9.1.7 The Contractor agrees that the Management Fee payable has been allowed for in the Prices specified in the Price Schedule together with all costs associated with its calculation and proof of payment of the Management Fee and compliance with this clause 9.1.

9.1.8 Within 7 days of the end of each Payment Period, the Contractor shall provide electronically through smartbuy® to the Board a sales report ("the Report") which relates to the relevant Payment Period reporting the:

(a) total amount, exclusive of GST, all Customers are liable to pay in respect of all Deliverables invoiced by or on behalf of the Contractor, to Customers under the Agreement;

(b) the sales information as set out in Item 7 of Schedule 1 ("the Sales Information"); and

(c) such other relevant information as the Board may, by notice in writing to the Contractor, reasonably require.

9.1.9 In the event that the Contractor does not complete a Report within 7 days of the end of a Payment Period, the Contractor will be liable for interest, at the rate specified in item 8 of Schedule 1, on the outstanding Management Fee for the relevant Payment Period, calculated from 7 days after the end of the relevant Payment Period until the Management Fee is paid.

9.1.10

(a) After receipt of the completed Report from the Contractor, the Board shall then compile a Tax Invoice for the Management Fee payable based on the Report and forward that Tax Invoice to the Contractor.

(b) The Contractor shall then forward payment to the Board in accordance with the Tax Invoice compiled by the Board within fourteen [14] days of the date of the Tax Invoice;

(c) In the event that the Contractor does not provide payment within fourteen [14] days of the date of the Tax Invoice it will be liable for interest at the rate specified in item 8 of Schedule 1 on the invoiced amount, calculated from [14] days after the date of the Tax Invoice

9.1.11 The Tax Invoice referred to in clause 9.1.10 will set out the Management Fee payable by the Contractor to the Board and the GST payable on the Management Fee.

9.1.12 The Board may alter the above procedure for the collection of the Management Fee as advised in writing from time to time during the Term.

9.1.13 Where the Contractor considers that an accounting adjustment to the amount of the Management Fee paid or payable during a Payment Period is required, it should advise the Board in writing. The Parties may then agree on the amount of any adjustment.

9.1.14 Where the Contractor has not issued an invoice to any Eligible Customer during a relevant Payment Period the Contractor must provide, within 7 days of the end of that Payment Period, a report stating that no Deliverables were provided by the Contractor to any Eligible Customer during that Payment Period.

9.1.15 The Contractor must set up and maintain a system which:

(a) to the reasonable satisfaction of the Board is suitable for identifying all purchasers of the Deliverables under the Agreement that are Eligible Customers whether pursuant to Customer Contracts or otherwise;

(b) enables monitoring by the Board of Customer Contracts placed with, and invoices issued, by the Contractor, on behalf of the Contractor, or by its Designated and Nominated Subcontractors;

(c) enables the provision of Sales Information; and

(d) accommodates the use of the Customer's corporate credit card if the Parties have agreed to use that card for the purchase of Deliverables, and failure to establish such a system to the reasonable satisfaction of the Board shall constitute a breach of this Agreement and the Board may, it is discretion, terminate the Agreement.

9.1.16

(a) The Board may, at its own cost, take such measures as it considers reasonable in the circumstances (including the appointment of an auditor) to verify the Contractor has paid the correct amount of Management Fee due to the Board and the Contractor agrees to cooperate with the Board.

(b) If the Board appoints an auditor, the Board will inform the Contractor in writing of the appointment. The Contractor agrees to cooperate with any auditor appointed by the Board, including providing, or providing access to, within 10 working days of the written notification from the Board that an audit will take place, information about all sales of Deliverables made to Eligible Customers (whether pursuant to an Order or otherwise), copies of all contracts, orders and invoices between the Contractor and any Eligible Customers. The Contractor agrees to provide the auditor appointed by the Board access for the purpose of this clause 9.1.16 on the basis of the appointed auditor entering into an Auditor Confidentiality Agreement in the form set out in Schedule 5.

9.1.17 If the measures taken in clause 9.1.16 verify that the Contractor has not paid in full the Management Fee that is actually due to the Board, the Contractor:

(a) must pay the difference between the Management Fee paid to the Board and the Management Fee actually due to the Board within 30 days of a written direction from the Board;

(b) will be liable for interest at the rate specified in item 8 of Schedule 1, on the additional amount calculated from 30 days after the expiry of the relevant Payment Period, and

(c) will, at the discretion of the Board, reimburse the Board's costs and expenses of the measures taken (including any auditor's fees) under clause 9.1.16 to the Board in accordance with the sliding scale set out below to compensate the Board for the cost incurred in ensuring the correct Management Fee is paid:

Difference between Management Fee paid and payable:

(a) 99% or more of Management Fee was paid

(b) 90-98% of Management Fee paid

(c) 75-89% of Management Fee paid

(d) 50-74% of Management Fee paid

(e) less than 50% of payable Management Fee paid

Portion of Audit costs to be borne by Contractor:

(a) $0

(b) 25% of Audit and other costs

(c) 50% of Audit and other costs

(d) 75% of Audit and other costs

(e) 100% of Audit and other costs.

9.1.18 The Contractor shall during the Term of this Agreement and for a 12 month period after the Agreement has expired or is terminated, keep secure all relevant documents and information for the purposes of this clause and give any auditor appointed by the Board access to those documents and information at all reasonable times.

9.1.19 The Parties agree that a breach of this clause 9.1 (including without limitation, a failure by the Contractor to cooperate satisfactorily with the audit referred to in clause 9.1.17) shall be a Substantial Breach of this Agreement which will entitle the Board to terminate this Agreement pursuant to clause 16.1.1 and this right of termination shall be in addition to the right of the Board to recover from the Contractor any sums payable to the Board under this Agreement or otherwise, or the right of the Board to deduct those sums from any money that may be or become payable by the Board to the Contractor on any other account.

10 Confidentiality

10.1 Obligations of Parties

10.1.1 Except to the extent necessary to comply with any statutory requirements or government policy relating to the public disclosure of Confidential Information, neither Party will make public, disclose or use any Confidential Information of the other Party except in accordance with this Agreement or a Customer Contract, unless the other Party gives its prior written consent.

10.1.2 Each Party may disclose Confidential Information to its officers, employees and sub-contractors where such disclosure is essential to carrying out their duties or in accordance with this Agreement or a Customer Contract.

10.1.3 Each Party must ensure the Confidential Information of the other Party is used solely in connection with or for the purposes of fulfilling its obligations under this Agreement or a Customer Contract.

10.1.4 The Board or the Customer may at any time require the Contractor to arrange for its Personnel engaged in the performance of this Agreement or a Customer Contract to execute without delay a Deed of Confidentiality, substantially in the form of Schedule 4.

10.1.5 This clause will survive the termination of this Agreement.

11 Intellectual Property

11.1 Ownership

11.1.1 Intellectual Property created in relation to New Contract Material will be owned by the Contractor upon their creation.

11.1.2 The Contractor irrevocably grants to the Customer a non-exclusive royalty free transferable licence to use the Intellectual Property in the New Contract Material for so long as the Customer may require.

11.1.3 The Parties acknowledge and agree that the Parties or, where applicable, particular third parties, are the sole owners of their Intellectual Property rights in or in relation to the Existing Contract Material.

11.1.4 The Contractor must ensure all licence fees and/or consents required under law are paid and/or obtained as a result of any reproduction, adaptation or use of any Intellectual Property or Contract Material necessary for the provision of the Deliverables.

11.1.5 Upon completion of the Customer Contract, or at such other time as the Customer may require, the Contractor must fully and promptly disclose to the Customer all New Contract Material created or developed under or in connection with this Agreement.

12 Specific Obligations of Contractor

12.1 Marketing by the Contractor

12.1.1 The Contractor is responsible for the proactive marketing of its organisation's capability to Customers.

12.2 Provision of Catalogue Information for E-commerce Initiatives

12.2.1 From time to time the Board may request the Contractor to supply information in the nature of catalogue information for use in e-commerce initiatives in NSW Government contracting.

12.2.2 The Contractor must promptly supply any such information that is reasonably requested by the Board in the format, and using the method of delivery, specified by the Board at the time of the request.

12.2.3 The Contractor consents to the use of such information, including any personal information, in any catalogue created by the NSW Department of Commerce to facilitate e-commerce in NSW Government contracting.

12.3 Licences and Approvals

12.3.1 The Contractor must obtain at its own cost all licences, approvals and consents necessary to perform this Agreement.

12.4 Compliance with Laws and Standards

12.4.1 The Contractor must, in carrying out this Agreement, comply with:

(a) all applicable Statutory Requirements;

(b) the NSW Government codes, policies, guidelines and Standards listed in item 9 of Schedule 1 or any other codes, policies, guidelines and Standards specified in writing by the Board to the Contractor; and

(c) a particular Standard which has been agreed between the Contractor and the Board, and that Standard is revised, the Contractor must submit evidence of compliance with the revised Standard within a reasonable period of time.

(d) the obligations imposed on the Board by the Privacy and Personal Information Protection Act 1998 (NSW) in relation to Personal Information that is disclosed to, or acquired by, or in possession of the Contractor in accordance, or in connection, with the Contract. The Contractor must, and must ensure that its officers, employees, agents and sub-contractors, comply with the obligations imposed on the Board by the Privacy and Personal Information Protection Act as though the Contractor were, as far as reasonably practicable, the Board in relation to any such Personal Information. The Contractor will comply with any request of the Board in relation to Personal Information and will not do anything that would cause the Board to be in breach of its obligations under the Privacy and Personal Information Protection Act.

12.5 Minimum Insurance Requirements

12.5.1 The Contractor must hold and maintain, and must ensure that all subcontractors are beneficiaries under or otherwise hold and maintain, the following insurances for the Term, or for such other period as may be specifically required by this Agreement for the particular policy:

(a) a broad form liability policy of insurance which includes public liability insurance for at least the amount specified in item 11(a) of Schedule 1 in respect of each claim; and

(b) products liability insurance for at least the amount specified in item 11(b) of Schedule 1 for the total aggregate liability for all claims arising out of the Contractor’s products for the period of cover; and

(c) workers’ compensation insurance in accordance with applicable legislation for all the Contractor's employees; and

(d) such other insurances as are specified in Schedule 1 item 11 of the Agreement Details.

12.5.2 All policies of insurance must be effected with an insurer insurer rated A – or better by AM Best or an equivalent rating organisation.

12.5.3 The Contractor must ensure that each policy is in effect for the Term of this Agreement or such other period as required by the Board.

12.5.4 The Contractor shall, and shall ensure sub-contractors, as soon as practicable, inform the Board in writing of the occurrence of an event that may give rise to a claim under a policy of insurance effected as required by the Agreement and shall ensure that the Board is kept fully informed of subsequent action and developments concerning the claim.

12.5.5 The Contractor must, when requested in writing by the Board, arrange for its insurer to complete a “Certificate of Currency of Insurance Obtained”.

12.5.6 Where the Contractor is insured under its parent company’s insurance policy, the parent company’s insurance policy must clearly indicate that it applies and extends coverage to the Contractor.

12.5.7 The effecting of insurance shall not limit the liabilities or obligations of the Contractor under other provisions of this Agreement.

12.6 General Indemnity

12.6.1 The Contractor will be liable in respect of, and indemnifies, and shall keep indemnified, the Board and the Customers and their officers, employees and agents against any claim, loss or expense (including a claim, loss or expense arising out of personal injury or death or damage to property) which any of them pays, suffers, incurs or is liable for (including legal costs on a solicitor and client basis) (together "the loss") as a result of any unlawful, negligent, reckless or deliberately wrongful act or omission of the Contractor (or its employees, agents or subcontractors or their employees) in the performance of this Agreement.

12.6.2 The Contractor's liability in respect of, and indemnity given in, clause 12.7.1 shall be reduced proportionally to the extent that any unlawful, negligent, or deliberately wrongful act or omission of the Board, its officers, employees or agents caused or contributed to the loss.

12.7 Contractor's Warranties for the Deliverables

12.7.1 In relation to the Deliverables, the Contractor warrants that:

(a) at the time title to a Deliverable passes to the Customer, the Deliverable will be free from any charge or liability;

(b) during the Warranty Period, each Deliverable:

(i) shall be new and shall conform with the Statement of Requirements;

(ii) shall conform to the description, and sample (if any) approved by the Board or Customer in Schedules 2 and 3 (except that if a sample is inconsistent with the Statement of Requirements, the latter must prevail);

(iii) shall be free from defects; and

(c) it will provide the associated services in accordance with the requirements of Schedule 2 and the Customer Contract and with due care and skill.

12.8 Contractor's Warranties (General)

12.8.1 The Contractor warrants:

(a) that the Deliverables do not infringe the Intellectual Property rights of a third party; and

(b) the Deliverables shall conform to any legally applicable Australian Standards;

(c) it has capacity to enter into this Customer Contract and perform the obligations imposed on the Contractor; and

(d) the Contractor has not entered into any arrangement, whether a trust arrangement or otherwise, that impedes or is likely to impede the performance of the Customer Contract by the Contractor.

12.9 Warranty Period

12.9.1 The Contractor shall rectify any error or defect in a warranted Deliverable that has been notified to it by a Customer during the Warranty Period in Schedule 2 at the Contractor's sole cost and expense.

12.9.2 If the Contractor fails to rectify an error or defect in a Deliverable within 30 days after notification by the Customer, the Customer may arrange for performance of the necessary remedial work by a third party at the Contractor's expense.

12.10 Maintenance by the Contractor

12.10.1 Maintenance is to be offered as an option to Customers. Customers retain the right to use alternative maintenance providers and undertake the maintenance in accordance with the Contractor's recommended maintenance schedule.

12.10.2 The warranties offered by the Contractor will not be invalidated by the Customer using alternative maintenance providers.

12.11 Third Party Warranties

12.11.1 Where the Contractor supplies Deliverables that have been procured from third parties, the Contractor agrees to assign to the Customer, to the extent permitted by law, the benefits of any warranties given by the third parties.

12.11.2 The parties agree that the assignment of any third party warranties is in addition to the warranties offered directly by the Contractor under this Customer Contract and does not relieve the Contractor from the obligation to comply with the Contractor's own warranties.

12.12 Mistakes in Information

12.12.1 The Contractor must pay for any additional costs incurred by the Board or any Customer for errors or omissions in material or other Information supplied by it, even though that material or Information may have been approved by the Board.

12.13 Notification of Change in Control or Transfer of Ownership

12.13.1 During the Term, the Contractor must immediately notify the Board and any Customers under an existing Customer Contract in writing of any Change in Control or other action to reconstruct or amalgamate itself.

12.14 Notification of Contractor's Insolvency

12.14.1 The Contractor must immediately notify the Board in writing of the Contractor's Insolvency and disclose the details of any:

(a) Action taken in relation to the Contractor's Insolvency in so far as it affects this Agreement and any Customer Contracts;

(b) Existing Customer Contracts which the Contractor has entered into under this Agreement.

12.14.2 The Contractor must immediately notify all Customers under an existing Customer Contract of the Contractor's Insolvency.

12.15 Financial Security

12.15.1 If requested by the Principal, the Contractor must provide Financial Security within 7 days of such request. The Financial Security must be substantially in the form set out in Schedule 9 and must be issued by a financial institution acceptable to the Principal. The Principal will hold the Financial Security as Security for the due and proper performance of all obligations of the Contractor under this Agreement.

12.5.2 If the Financial Security is not sufficient to meet payment of all the loss or damaged suffered by the Principal, the balance remaining will be a debt due and owing from the Contractor to the Principal and may be recovered in any appropriate court.

12.5.3 The Contractor agrees that the Principal will have no liability to the Contractor for any loss or damage suffered or incurred by the Contractor where the Principal exercises its rights under this clause in good faith.

12.5.4 The Contractor must not take any action to injunct or otherwise prevent the Principal from making a claim or receiving payment under the Financial Security. This clause does not prevent the Contractor from taking action to recover from the Principal the amount invalidly received by the Principal under any such Financial Security.

12.5.5 The Principal must release the Financial Security to the Contractor (or to whom the Contractor directs) if in the reasonable opinion of the Principal;

(a) there is no prospect that money or damages will become owing (Whether actual or contingent) by the Principal; and

(b) no payment by the Contractor or the provider of the Financial Security is likely to be void, voidable or refundable under any law, including without limitation any law relating to insolvency.

13 Performance Management

13.1 Service Levels

13.1.1 The Contractor must meet the specified Service Levels in Schedule 7 during the Term of this Agreement. Performance against the Service Levels must be tracked by the Contractor and reported to the Board's Delegate in accordance with the frequencies and formats in Schedule 7.

13.1.2 Where the Contractor does not meet the Service Levels in Schedule 7, the Board may, at its discretion, take one or more of the following actions in relation to the Contractor:

(a) refuse to agree to all or a portion of the price variation requested by the Contractor under clause 5.4.1,

(b) temporarily suspend the use of all or parts of this Agreement by all Customers, for a period not exceeding 12 months; and

(c) require the Contractor to undertake more frequent performance reporting in addition to those specified in Schedule 7, to ensure performance is improved;

until such time as the Contractor has demonstrated its ability to meet the Service Levels in accordance with Schedule 7.

13.1.3 The remedies in clause 13.1.2 are in addition to any other provisions available to the Board to deal with the inability of the Contractor to meet its Service Level obligations under this Agreement and at law.

13.1.4 The measurements and tolerances in the Service Levels specified in Schedule 7 may be amended, added to, or deleted by the Board and the Contractor in writing during the Term of this Agreement.

13.2 Board's Delegate

13.2.1 The Board has nominated the Board's Delegate in Schedule 1 item 10 to oversee the performance of this Agreement. The Board may, by notice in writing to the Contractor, nominate a replacement Board Delegate.

13.3 Contractor's Relationship Manager

13.3.1 For the purpose of ensuring an efficient relationship with the Board the Contractor has appointed the Relationship Manager indicated in Schedule 1 item 12. The Relationship Manager must:

(a) act as the representative of the Contractor and have the legal power to bind the Contractor in all matters pertaining to this Agreement;

(b) serve as the principal point of contact for the Contractor with respect to the overall administration of the Agreement;

(c) have the authority to implement such actions (including issuing of directives through the Contractor's organisation), as may be required for the Contractor to comply with this Agreement;

(d) meet with the Board's Delegate at least once each month to provide information regarding the Contractor's performance under this Agreement, with particular reference to the Service Levels in clause 13.1.1; and

(e) answer the Board's queries and work with the Board to address issues relating to matters deemed urgent by the Board arising out of this Agreement.

13.3.2 The Relationship Manager must be available at all times during business hours and at all other times on reasonable notice by the Board's Delegate to meet with the Board's Delegate to discuss any queries, concerns or issues arising in connection with this Agreement or a Customer Contract.

13.3.3 The Relationship Manager must be supported by the Key Personnel in Schedule 1 item 12 in respect of Customers. The Relationship Manager and/or the Key Personnel named in Schedule 1 item 12 must be available to attend periodic meetings as required by Customers.

13.4 Meetings

13.4.1 Key contractors personnel must be available for quarterly meetings with NSWP Contracting Services to review the performance of the contractor, the Agreement overall, and discuss any issues of which either Party is aware that may have a material adverse impact on its obligations under this Agreement.

13.4.2 All quarterly reports must be available 1 week before the quarterly meeting.

13.4.3 During implementation, from the letter of acceptance being issued to the contractor, several meetings at short intervals may be required to manage implementation issues.

13.4.4 The Contractor is also required to meet with Customers during the term of the Contract. Such meetings are to be quarterly or at mutually agreed times. The cost of these meetings are to be included in the contract prices.

13.5 Innovation and Continuous Improvement

13.5.1 The Contractor must identify innovative solutions for mutual value enhancement in connection with this Agreement, with a view to achieving continuous improvement.

13.5.2 The Contractor must submit in writing to the Board, at its own cost, detailed proposals for changes to the Products and associated supply chain solutions which are likely to offer significant (including repeated and long term) benefits to the Board in accordance with the requirements of Schedule 2.

13.5.3 The Contractor must ensure that such solutions do not include anything which might adversely affect the quality of the Products and that any proposed changes are consistent with the purpose and intent of this Agreement.

13.5.4 The Board must consider the Contractor's proposals, but is not bound to accept any proposal. The Board may also accept the proposed changes subject to conditions. The Contractor shall have no claim arising out of the Board's failure to accept any proposal or proposed changes.

13.5.5 If the Board accepts any changes proposed by the Contractor, any direct savings in the cost to the Contractor of supplying the Products will be for the benefit of the Customer.

13.5.6 For the purposes of monitoring performance and providing incentives for the Contractor to improve its performance level, the Board will construct and maintain an Overall Performance Indicator (OPI).

13.5.7 Data input into the OPI will be provided by the Board which will monitor the Key Performance Indicators (KPI) and by the Customer which will monitor the Agency Performance Indicator (API).

13.5.8 The performance framework and the performance indicators are set out in Schedule 7.

13.5.9 Where the Contractor has consistently met the levels set out in Schedule 7, the Board, may in its absolute discretion:

(a) extend the period of the Agreement with the Contractor subject to the original term and any relevant policy consideration, and/or

(b) reduce the level and frequency of the Board's reporting requirements.

13.6 Contractor Performance Monitoring

13.6.1 The Board will monitor the sales performance of the Contractor under this Agreement. Where after 12 months of operation of this Agreement the:

(a) sales of the Contractor are minimal, or

(b) the Contractor consistently has nil returns,

it may be treated as unacceptable performance of this Agreement by the Board.

13.7 Exchange of Information Between Government Agencies

13.7.1 The Contractor authorises the Board and its employees and agents to make available to NSW Government departments or agencies Information concerning the Contractor, including any Information provided by the Contractor to the Board and any Information relating to the Contractor's performance under the Agreement, or the Contractor's financial position.

13.7.2 The Contractor acknowledges that Information about the Contractor from any source including any substantiated reports of unsatisfactory performance, may be taken into account by NSW Government agencies in considering whether or not to offer the Contractor future opportunities for NSW Government work.

13.7.3 The Board regards the provision of Information about the Contractor to any New South Wales Government department or agency as privileged within section 30 of the *Defamation Act 2005* (NSW).

13.7.4 The Contractor releases and indemnifies the Board and the State of New South Wales from any claim in respect of any matter arising out of the provision of Information. Without limiting the above, the Contractor releases the Board and the State of New South Wales from any claim it may have for any loss to the Contractor arising out of the provision of Information relating to the use of such Information by the recipient of the Information.

14 Personnel

14.1 The Contractor's Personnel

14.1.1 The Contractor warrants that all personnel engaged in the provision of the Deliverables are appropriately qualified, competent and experienced including the Contractor's Relationship Manager and the Key Personnel.

14.1.2 The Contractor must:

(a) employ only such persons as are careful, skilled and experienced in the provision of the Deliverables or similar Deliverables; and

(b) (where applicable) hold, or ensure appropriate personnel hold, all necessary licences, permits and authorities.

14.1.3 The Board may object to and direct the Contractor to remove any of its Personnel (including the Relationship Manager and Key Personnel) who in its opinion are incompetent, unsuitable, or who has been guilty of neglect, or other improper behaviour. Such named personnel so removed may not be re-employed by the Contractor under this Agreement.

14.1.4 Any replacement Key Personnel provided by the Contractor must be approved by the Board.

15 Conduct and Dispute Management

15.1 Co-operation

15.1.1 The Parties must do all they reasonably can to co-operate in matters relating to this Agreement and/or the Customer Contract, but their rights and responsibilities under the Agreement and/or the Customer Contract remain unchanged unless the Parties agree in writing to vary them.

15.2 Duty not to Hinder Performance

15.2.1 Each Party must do all it reasonably can to avoid hindering the performance of the other under the Agreement and the Customer Contract.

15.3 General

15.3.1 In order to resolve any conflicts or issues between the Parties promptly and to the satisfaction of the Parties, the issue resolution process stated below is to be followed:

(a) Amicable Resolution (clause 15.4.);

(b) Expert Determination (clause 15.5)

15.4 Amicable Resolution

15.4.1 Either Party may give notice to the other Party of an issue, including a dispute or difference, ("the Issue Notice") about the meaning or effect of the Agreement, Customer Contract or about any matter arising under or out of the Customer Contract. The Issue Notice must be given within a reasonable time of the Party becoming aware of the issue.

15.4.2 The Party submitting the Issue Notice must submit it to the other Party's authorised representative, which in the case of the Board is to the Board's Delegate, and in the case of the Contractor is the Relationship Manager.

15.4.3 The Parties must follow the issue resolution process in this clause before either commences proceedings or takes similar action except to seek an urgent injunction or declaration.

15.4.4 If a Party gives an Issue Notice under this clause, each Party will nominate in writing a senior executive who will promptly confer to resolve the issue.

15.4.5 A Party is not entitled to refer an issue to Expert Determination until 21 days after the giving of the Issue Notice to the person or persons specified.

15.4.6 A Party may only refer an issue to Expert Determination by giving notice in writing specifying the issue to be decided ("the Referral Notice").

15.4.7 If the Party giving the Referral Notice is the Contractor it must give the Referral Notice to the Customer and the Board.

15.4.8 If the Party giving the Referral Notice is the Customer, it must give the Referral Notice to the Contractor and the Board.

15.4.9 If a Referral Notice has not been given to the person or persons specified within 28 days, then the issue is barred from Expert Determination or any other action or proceedings (including court proceedings).

15.5 Expert Determination

15.5.1 If a Referral Notice is given under clause 15.4, the expert is to be agreed between the Board and the Contractor. If they cannot agree within 28 days of the Referral Notice, the expert is to be nominated by the Chief Executive Officer, Australian Commercial Disputes Centre, Sydney.

15.5.2 The expert nominated must be a lawyer unless otherwise agreed. The expert must not be:

(a) an employee of the parties;

(b) a person who has been connected with the Agreement or the Customer Contract as the case may be; or

(c) a person who the Parties have been unable to agree on.

15.5.3 When the person to be the expert has been agreed or nominated, the Board, on behalf of both Parties, must engage the expert by letter of engagement (and provide a copy to the Contractor) setting out:

(a) the issue referred to the expert for determination;

(b) the expert's fees;

(c) the procedure for determination set out in Schedule 9;

(d) any other matter which is relevant to the engagement.

15.5.4 The Parties must share equally the fees and out-of-pocket expenses of the expert for the determination, and bear their own expenses.

15.5.5 If the expert determines that one Party must pay the other an amount exceeding the amount shown in Item 13 Schedule 1 (calculating the amount without including interest on it, and after allowing for set offs), then either Party may commence litigation, but only within 56 days after receiving the determination.

15.5.6 Unless a party has a right to commence litigation under clause 15.5.5:

(a) the Parties must treat each determination of the expert as final and binding and give effect to it; and

(b) if the expert determines that one Party owes the other money, that Party must pay the money within 28 days.

16 Termination by the Board

16.1 Termination for Cause

16.1.1 Without prejudice to its rights at common law, the Board may immediately terminate this Agreement, in whole or in part, by written notice to the Contractor ("Notice of Termination for Cause"):

(a) where the Contractor makes any statement, fact, information, representation or provides material in the Tender which is false, untrue, or incorrect in a way which materially affects the Agreement;

(b) where proceedings or investigations are commenced or threatened by the Independent Commission Against Corruption or similar public body against the Contractor including for corrupt conduct or for collusive pricing;

(c) where the Contractor commits a Substantial Breach of the Agreement that is not capable of remedy;

(d) where the Contractor commits a Substantial Breach of the Agreement in a manner that is capable of remedy and does not remedy the breach within 7 days of receiving a notice from the Board requiring it to do so ("Notice of Breach"), or such further time, having regard to the nature of the breach and a reasonable time to remedy it, as the Board may reasonably allow;

(e) where the Contractor assigns its rights and/or obligations, or novates this Agreement or subcontracts the Customer Contract except in accordance with this Agreement;

(f) in the case of the Contractor's Insolvency;

(g) where the Contractor has not for three consecutive Payment Periods issued any invoice to a Customer or received any order; or

(h) if in the Board's view a conflict of interest exists for the Contractor which prevents the proper performance of this Agreement.

16.2 Effect of Termination for Cause

16.2.1 If the Board terminates this Agreement for cause the Board may:

(a) contract with any other person to complete the provision of the Products including but not limited to any order remaining to be filled;

(b) deduct loss or damages arising from or in connection with the termination, including any loss or damages incurred by a Customer under any Customer Contract (which may be ascertained and certified by the Board), from any money due, or which may become due to the Contractor (whether under this Agreement or any Customer Contract) and/or from the Financial Security (if any); and

(c) recover from the Contractor in an appropriate court the balance of any monies remaining unpaid as a debt due and payable by the Contractor to the Board.

16.2.2 The Board's termination under this clause will not affect any Customer Contract unless the context requires it.

16.3 Termination for the Board's Convenience

16.3.1 The Board may terminate this Agreement in whole or in part for its convenience by giving 14 days written notice ("Notice of Termination for Convenience") with effect from the date stated in the notice and without the need to provide reasons.

16.4 Effect of Termination for Convenience

16.4.1 The Board's termination under this clause will not affect any Customer Contract unless the context requires it.

16.4.2 The Board shall reimburse the Contractor its unavoidable costs directly incurred as a result of termination provided that any claim by the Contractor:

(a) must be supported by written evidence of the costs claimed;

(b) will be in total satisfaction of the liability of the Board to the Contractor in respect of this Agreement and its termination.

16.4.3 The Board shall not in any circumstances be liable for any Consequential Loss or loss of profits suffered by the Contractor as a result of the termination of this Agreement by the Board.

17 Termination by Customer

17.1 Termination of Customer Contract

17.1.1 Without prejudice to its rights at common law, the Customer may immediately terminate the Customer Contract, by written notice to the Contractor ("Notice of Termination"):

(a) where proceedings or investigations are commenced or threatened by the Independent Commission Against Corruption or similar public body against the Contractor including for corrupt conduct or for collusive pricing;

(b) where the Contractor commits a Substantial Breach of the Customer Contract that is not capable of remedy;

(c) where the Contractor commits a Substantial Breach of the Customer Contract in a manner that is capable of remedy and does not remedy the breach within 7 days of receiving a notice from the Customer requiring it to do so ("Notice of Breach"), or such further time as the Customer may reasonably allow;

(d) where the Contractor assigns its rights and/or obligations, or subcontracts the Customer Contract otherwise than in accordance with the Customer Contract; or

(e) in the case of the Contractor's Insolvency.

17.2 Effect of Termination of Customer Contract

17.2.1 In the event of termination, the Customer:

(a) may procure from any other source a reasonably similar alternative to the Product suitable to the Customer and the Contractor shall be liable to the Customer for any reasonable extra expense incurred together with any loss sustained by the Customer;

(b) may, by notice in writing to the Contractor, require the Contractor at its expense to remove the specified Product not accepted by the Customer and to dismantle or remove specified work from the Customer's premises by a date specified in the notice;

(c) shall be liable under the Customer Contract to pay only for the Products delivered and accepted by the Customer or performed to the satisfaction of the Customer, in accordance with the Customer Contract; and

(d) may recover from the Contractor the amount of any loss or damage suffered by the Customer as a result of the termination.

17.2.2 This clause will survive the termination of the Customer Contract.

17.2.3 If the Customer terminates this Customer Contract the Customer may:

(a) deduct any loss or damages arising from or in connection with the termination, from any money due, or which may become due to the Contractor and/or from the Financial Security (if any); and

(b) recover from the Contractor in an appropriate court the balance of any monies remaining unpaid as a debt due and payable by the Contractor to the Customer.

17.2.4 The Customer's termination under this clause will not affect the Agreement, unless the context requires it.

17.2.5 Any termination by the Customer is without prejudice to any accrued rights or remedies of the Customer under the Customer Contract.

18 General

18.1 No Assignment or Novation

18.1.1 The Contractor must not assign or novate this Agreement or a Customer Contract without first obtaining the prior written consent of the Board or the Customer as applicable, which consent may be withheld at their absolute discretion.

18.1.2 The Contractor acknowledges that the Board may make financial checks and due diligence checks on the entity proposing to take over this Agreement before determining whether or not to give consent to the assignment or novation.

18.2 Conflicts of Interest

18.2.1 The Contractor promises that, to the best of its knowledge, no conflict of interest of the Contractor, its employees, agents or sub-contractors exists or is likely to arise in the performance of its obligations under the Agreement.

18.2.2 The Contractor must:

(a) notify in writing, and consult with, the Board immediately upon becoming aware of the existence, or possibility, of a conflict of interest; and

(b) comply with any direction given by the Board in relation to those circumstances designed to manage that conflict of interest.

18.2.3 For the purposes of this clause, a "conflict of interest" includes engaging in any activity, or obtaining any interest, likely to conflict with the performance by the

Contractor of, or to restrict the Contractor in performing, its obligations under the Agreement.

18.3 Records and Access to Records

18.3.1 The Contractor must keep proper accounts and records in accordance with the accounting principles generally applied in commercial practice.

18.3.2 During the Term, the Contractor must, within a reasonable time of a request from the Board, give the Board access to, and copies of, any material relevant to the performance of the Contractor's obligations under this Agreement, and any financial information, that the Board reasonably requires.

18.4 Waiver

18.4.1 A waiver in respect of a breach of a term of this Agreement by the other Party shall not be taken to be a waiver in respect of any other breach. The failure of either Party to enforce a term of this Agreement will not be interpreted as a waiver of that term.

18.5 Severability

18.5.1 If any part of this Agreement is void or voidable, then that part is severed from this Agreement but without affecting the continued operation of the remainder of the Agreement.

18.6 Notices

18.6.1 Notices must be sent to the other Party at the address shown in items 15 or 16 of Schedule 1, or the address last notified to the other Party in writing, or in the case of the Contractor, at the Contractor's registered office.

18.6.2 All notices must be in writing and signed by the relevant Party and must be given either by hand delivery, post or facsimile transmission.

18.6.3 If delivery or receipt of a notice is not made on a business day, then it will be taken to be made on the next business day.

18.7 Counterparts

18.7.1 If there are a number of counterparts of this Agreement, the counterparts taken together constitute one and the same instrument.

18.8 Applicable Law

18.8.1 This Agreement is governed by the laws of the State of New South Wales and the Parties submit to the non-exclusive jurisdiction of the courts of the State of New South Wales and the Commonwealth of Australia.

18.9 No agency/no employment/no partnership

18.9.1 The Contractor agrees that the Contractor will not be taken to be, nor will it represent that it is, the employee, partner, officer and/or agent of the Board.

18.10 Disengagement Period

18.10.1 For 6 months following the expiry or termination of a Customer Contract (or part thereof) the Contractor will provide such assistance as is reasonably requested by the Customer for the supply of the Deliverables to continue without interruption to facilitate an orderly, prompt and efficient transition to an alternative service provider or to the Customer. Such assistance includes (without limitation):

(a) providing reasonable co-operation with a third party supplier nominated by the Customer, and

(b) providing the Customer data, information and materials that may be required to enable transacting with a new provider as requested by the Board or Customer.

18.11 Pricing Information

The Contractor agrees that, subject to clause 10 (Confidentiality), product pricing information (including discounts, commissions and rebates as appropriate) may be disclosed to any person by the Board at its sole discretion in the form of a User Guide or in any medium of communication it deems appropriate.

Schedule 1 Agreement Details

Item 1	**Contractor's Name**
Item 2	**Term**: (clause 2.1.1) Period 3 years from contract commencement **Period of extended term** (if any): (clause 2.2.1) Period: 2 options each of up to 1 year in duration
Item 3	**Restrictions on Nominee Purchasers** (clause 3.6)
Item 4	**Benchmarker** (clause 5.6) Name: Address: Telephone: Facsimile Hourly Rate:
Item 5	**Management Fee Rate** (clause 9.1.3) 2.5%
Item 6	**Payment Period of Management Fee** (clause 9.1) Monthly
Item 7	**Sales Information** (clause 9.1.8) **1.** The names of the ten largest Customers listed by dollar value invoiced by the Contractor in the relevant Payment Period. Every three months, reports will be provided, in an excel spreadsheet, showing the following. • **Quotations** – for each quotation offered, provide details of the number and type of equipment offered, power output, labour, total cost, cost breakup to show alignment with contract pricing, proposed completion time, date of site inspection, date to commence work on site. Name of school/location/entity at which installation is proposed. Contact details of the school/agency/entity officer requesting the quotation. • **Orders received** – as above, with any variation from original quotation clearly defined. • **Completed work** – same details with dates of actual commencement and completion. • **Summary report** – number and value of quotations issued, orders received, work completed.

Item 8	**Interest for Late Payment of Management Fee** (clause 9.1.9, 9.1.10 and 9.1.17) Interest of 5% per annum shall be payable by the Contractor on any Management Fee not remitted to the Board in accordance with the clause 9.1.9, 9.1.8 and 9.1.17.
Item 9	**Codes and Standards** (clause 12.5.1) 1. Code of Practice for Procurement 2. Implementation Guidelines NSW Government Procurement 1999 3. Environmental Management Systems Guidelines 4. Occupational Health and Safety Management Systems Guidelines 5. Code of Behaviour (for the protection of children and other vulnerable people) 6. All standards, Acts and Guidelines detailed in Part F
Item 10	**Board's Delegate** (clause 13.2)
Item 11	**Insurances** (clause 12.6) a) Public Liability Insurance Limit of Indemnity: $AUS20M: b) Products Liability Insurance Limit of Indemnity $AUS10M:
Item 12	**Key Personnel** (clause 14.1.1) **Relationship Manager (clause 13.3.1)** **Name:** **Address:** **Position:** **Telephone:** **Facsimile:**
Item 13	**Expert Determination Amount** (clause 15.5.5): **AUD: $100,000**
Item 14	**Notices to:** (clause 18.6) **The Contractor's contact name and address:** **Name:** **Address:** **Position:** **Telephone:** **Facsimile:**
Item 15	**The Board's contact name and address:** **Name: Chairman, SCCB** **Address: Level 15 McKell Building, 2-24 Rawson Place, SYDNEY, NSW 2000** **Telephone: 9372 8818** **Facsimile: 9372 8803**
Item 16	**Security** (clause 12.15): Amount: $20,000 Form: Schedule 9

Schedule 2 Statement of Requirements

Schedule 3 Pricing, Price Variation Mechanism, and List of Products

Pricing and List of Products

Price Variation Mechanism

Discounts offered

Schedule 4 Deed of Confidentiality

THIS DEED DATED THE _____day of_____200__

BETWEEN *(insert name of Principal)* of *(insert address of Principal),* in the State of New South Wales ("the Principal")

AND [*Name and address of Contractor*] ("the Contractor ")

RECITALS:

A. In the course of the Contractor supplying certain Deliverables for the Principal (whether directly or indirectly) pursuant to the Agreement, the Contractor will have access to and may become aware of Confidential Information belonging to or in the possession of the Principal.

B. Improper use or disclosure of the Confidential Information would severely damage the Principal's ability to perform its governmental/statutory functions and would severely damage the commercial interests of the NSW Government.

C. The Principal requires, and the Contractor agrees, that it is necessary to take all reasonable steps (including the execution of this Deed) to ensure that the Principal's Confidential Information is kept confidential and that the Contractor provides the Deliverables faithfully and without any conflicting interest.

D. This Deed sets out the terms on which the Contractor will have access to the Confidential Information

OPERATIVE PROVISIONS:

1. Recitals

The Parties acknowledge the truth and accuracy of the Recitals in every particular.

2. Interpretation

2.1 Definitions

In the interpretation of this Deed unless a contrary intention appears requires the following expressions will have the following meanings:

"**Agreement**" means the Agreement between the Board and the Contractor dated [*insert date*] for the supply of the Deliverables as defined in the Agreement.

"Board" means the State Contracts Control Board established by the Public Sector Employment & Management Act 2002 and includes duly authorised delegates of the Board, including officers of NSW Procurement – Contracting Services.

"Confidential Information" means information that:

(a) is by its nature confidential;

(b) is designated by the Principal as confidential; or

(c) the Contractor knows or ought to know is confidential;

and includes but is in no way limited to:

(d) the Contract Material;

(e) The Principal's Material including the financial information, the corporate information and the commercial information of the Principal or any Customer;

(f) any material which relates to the affairs of a third party;

(g) information relating to the policies, strategies, practices and procedures of the NSW Government and any information in the Contractor's possession relating to the NSW Public Service.

"**Contractor**" means [*insert name of Contractor*]

"Contract Material" means:

(a) any material created, written or otherwise brought into existence as part of, or for the purpose of performing the Deliverables including but not in any way limited to all Records, working papers, programs, flow charts, reports, including documents, equipment and information and data stored by any means ("New Contract Material");

(b) any material which is existing at the date of this Agreement and which is incorporated with the New Contract Material ("Existing Contract Material").

"Customer" has the same meaning as in the Agreement;

"Express Purpose" means the Contractor performing the obligations under the Agreement.

"Intellectual Property Rights" includes copyright, patent, trademark, design, semi-conductor or circuit layout rights, trade, business or company names, or other proprietary rights, or any rights to registration of such rights existing in Australia, whether created before or after the date of this Agreement;

"Notice" means notice in writing given in accordance with this Deed; and

"Principal" means [*insert name of Principal*].

"Principal's Material" means any documentation, information or material supplied by or on behalf of the Principal, or a Customer to the Contractor

"Records" includes the Contract Material and any other information, documents or data brought into existence by any means and stored by any means in connection with the performance of the Agreement;

2.2 General

2.2.1 Headings are for convenience only, and do not affect interpretation. The following rules also apply in interpreting this document, except where the context makes it clear that a rule is not intended to apply.

2.2.2 A reference to:

(a) legislation (including subordinate legislation)is a reference to that legislation as amended, re-enacted or replaced, and includes any subordinate legislation issued under it;

(b) a document or agreement, or a provision of a document or agreement, is a reference to that document, agreement or provision as amended, supplemented, replaced or novated;

(c) a person includes any type of entity or body of persons whether or not it is incorporated or has a separate legal entity;

(d) anything (including a right, obligation or concept) includes each part of it.

2.2.3 If this Agreement expressly or impliedly binds more than one person then it shall bind each such person separately and all such persons jointly.

2.2.4 A singular word includes the plural, and vice versa.

2.2.5 A word which suggests one gender includes the other genders.

2.2.6 If a word is defined, another part of speech of that word has a corresponding meaning.

3. Non disclosure

3.1.1 The Contractor must not disclose the Confidential Information to any person without the prior written consent of the Principal.

3.1.2 The Principal may grant or withhold its consent in its discretion.

3.1.3 If the Principal grants its consent, it may impose conditions on that consent, including a condition that the Contractor procure the execution of a Deed in these terms by the person to whom the Contractor proposes to disclose the Confidential Information.

3.1.4 If the Principal grants consent subject to conditions, the Contractor must comply with those conditions.

3.1.5 Despite cl.3.1.1, the Contractor may disclose the Confidential Information to its directors, officers, employees, and contractors ("permitted recipients") where such disclosure is essential to carrying out their duties owed to the Contractor or in accordance with this Deed.

3.1.6 Before disclosing the Confidential Information to a permitted recipient, the Contractor will ensure that the permitted recipient is aware of the confidentiality requirements of this Deed and is advised that it is strictly forbidden from disclosing the Confidential Information or from using the confidential information other than as permitted by this Deed.

3.1.7 The Confidential Information must not be copied or reproduced by the Contractor or the permitted recipients without the expressed prior

written permission of the Principal, except as for such copies as may be reasonably required for the purposes of this Deed.

3.1.8 The Principal may at any time require the Contractor to promptly arrange for the permitted recipients to execute a Deed of Confidentiality substantially in the form of this Deed.

3.1.9 If any person being any director, officer, contractor or employee of the Contractor, who has had access to the Confidential Information in accordance with this clause leaves the service or employ of the Contractor then the Contractor will ensure that that person does not do or permit to be done anything which, if done or permitted to be done by the Contractor, would be a breach of the obligations of the Contractor under this Deed.

3.1.10 The requirements of this Deed do not affect the obligation of the Contractor to disclose any Confidential Information where it is required to be disclosed at law.

4. Restriction on use

4.1 The Contractor must use the Confidential Information only for the Express Purpose and must not without the prior written consent of the Principal use the Confidential Information for any purpose other than the Express Purpose.

4.2 The Contractor must, unless otherwise authorised by the prior written consent of the Principal:

(a) treat as confidential and secret all of the Confidential Information which the Contractor has already acquired or will acquire from the Principal;

(b) take proper and adequate precautions at all times and enforce such precautions to preserve the confidentiality of the Confidential Information and take all necessary action to prevent any person obtaining access to the Confidential Information other than in accordance with this Deed;

(c) not directly or indirectly use, disclose, publish or communicate or permit the use disclosure, publication or communication of the Confidential Information to any person other than in accordance with this Deed;

(d) not copy or disclose to any person in any manner any of the Confidential Information other than in accordance with this Deed; and

(e) ensure that the permitted recipients comply with the terms of this Deed and keep the Confidential Information confidential and not use or disclose the Confidential Information other than as permitted by this Deed.

5. Survival

This Deed will survive the termination or expiry of the Agreement.

6. Rights of the Board

6.1 Production of Documents

6.1.1 The Principal may demand the delivery up to the Principal of all documents in the possession or control of the Contractor containing the Confidential Information.

6.1.2 The Contractor must immediately comply with a demand under this Clause 6.

6.1.3 If the Principal makes a demand under this clause 6, and the Contractor has placed or is aware that documents containing the Confidential Information are beyond his or her possession or control, then the Contractor must provide full particulars of the whereabouts of the documents containing the Confidential Information, and the identity of the person in whose possession or control they lie.

6.1.4 In this clause 6, "documents" includes any form of storage of information, whether visible to the eye or not.

6.2 Legal Proceedings

The Principal may take legal proceeding against the Contractor or third parties if there is any actual, threatened or suspected breach of this Deed, including proceedings for an injunction to restrain such breach.

7. Indemnity and release

7.1 The Contractor is liable for and agrees to indemnify and keep indemnified the Principal or a Customer in respect of any claim, damage, loss, liability, cost, expense, or payment which the Principal or a Customer suffers or incurs as a result of:

(a) a breach of this Deed (including a breach of this Deed which results in the infringement of the rights of any third party); or

(b) the disclosure or use of the Confidential Information by the Contractor or the permitted recipients other than in accordance with this Deed.

8. No exclusion of law or equity

This Deed does not exclude the operation of any principle of law or equity intended to protect and preserve the confidentiality of the Confidential Information.

9. Waiver

9.1 No waiver by the Principal of one breach of any obligation or provision of this Deed will operate as a waiver of another breach of any other obligation or provision of this Deed.

9.2 None of the provisions of this Deed will be taken to have been varied, waived, discharged or released by the Principal unless by its express consent in writing.

10. Remedies Cumulative

10.1 Cumulative

The rights and remedies provided under this Deed are cumulative and not exclusive of any other rights or remedies.

10.2 Other Instruments

Subject to the other covenants of this Deed, the rights and obligations of the parties pursuant to this Deed are in addition to and do not derogate from any other right or obligation between the parties under any other deed or agreement to which they are parties.

11. Variations and amendments

No term or provision of this Deed may be amended or varied unless reduced to writing and signed by the parties in the same manner as this instrument.

12. Applicable law

This Deed will be governed and construed in accordance with the law of New South Wales and the Commonwealth of Australia.

13. Notices

13.1 Notices must be sent to the other party at the address shown in this Deed, or the address last notified to the other party in writing, or in the case of the Contractor, at the Contractor's registered office.

13.2 All notices must be in writing and signed by the relevant party and must be given either by hand delivery, post or facsimile transmission.

13.3 If delivery or receipt of a notice is not made on a business day, then it will be taken to be made on the next business day.

Executed as a Deed

SIGNED, SEALED AND DELIVERED)
)
by)_____
for and behalf of the [insert name of Principal]) (signature of the Principal)

in the presence of:)

_____
[insert name of Witness]) (signature of Witness)

SIGNED, SEALED AND DELIVERED)
)
by_____)_____
[insert name of Contractor]) (signature of Contractor)
)
in the presence of _____)_____
[insert name of Witness]) (signature of Witness)

Schedule 5 Management Fee Audit Confidential Disclosure Deed of Agreement

Effective Date:
Auditor (Company):

This Confidential Disclosure Deed of Agreement is entered into by and between the Contractor ("Contractor") ABN and the "Auditor", which has been engaged by the State Contracts Control Board (“Board”) under an Agreement with the Contractor to carry out a review of the Contractor’s records and systems in connection with the Agreement dated…….for the supply of……..

1. In accordance with the clause 9 of the Agreement the Contractor will disclose to the Auditor all information that the Auditor may reasonably require to enable the Auditor to determine the amount of the Management Fee payable by the Contractor.

2. **Representatives**. The officer(s) responsible for disclosing or receiving Confidential Information are:

   On behalf of the Contractor:

   Name:
   Title:
   The Contractor’s address:
   Other officer:
   On behalf of Auditor:
   Name: ---------and any other partner or employee of the Auditor who is involved in the Audit or has a need to know in connection with the Audit.
   Title:
   Work Address of Auditor's representative above:

3. **Definition of Confidential Information**. The "Confidential Information" disclosed under this Agreement is all information in any form received in connection with the Audit. A recipient of Confidential Information under this Agreement shall have a duty to protect all such Confidential Information whether expressly disclosed as Confidential Information or not.

4. **Disclosure Period and Term**. The information disclosed by the Contractor to the Auditor will remain confidential for a period of 2 years from the date of this Deed.

5. **Use of Confidential Information**. The Auditor shall use, and shall ensure that any of its employees or contractors use, the Confidential Information for the sole purpose of fulfilling the Auditor’s obligations to the Board in relation to the Audit.

6. **Protection of Confidential Information**. The Auditor shall not disclose the Confidential Information to a third party other than the Board, and solely for the purposes for which the Confidential Information was disclosed. The Auditor shall take all reasonable steps to prevent the unauthorised use, dissemination or publication of the Confidential Information. For the avoidance of doubt, the Auditor’s partners and employees referred to in clause 2 are not third parties for the purposes of this clause.

7. **Exclusions**. This Agreement imposes no obligation upon a Recipient of the Auditor with respect to the Confidential Information which:

   (a) is or becomes a matter of public knowledge through no fault of the Recipient;

   (b) is required to be disclosed under operation of law; or

   (c) is disclosed by the Recipient with the Discloser's prior written approval; or

   (d) is disclosed to a party’s legal adviser in connection with the Audit or this Deed of Agreement.

8. **Proprietary Rights**. Neither party to this Deed of Agreement acquires any intellectual property rights or any other rights under this Deed of Agreement except the limited right to use set out in paragraph 5 above.

9. **General**. The parties do not intend that any agency or partnership relationship be created between them by this Deed of Agreement. This Agreement sets forth the entire agreement with respect to the Confidential Information disclosed herein and supersedes all prior or contemporaneous agreements concerning such Confidential Information, whether written or oral. All additions or modifications to this Deed of Agreement must be made in writing and must be signed by both parties.

   This Deed of Agreement shall be governed by the laws of the State of New South Wales and shall be subject to the jurisdiction of the Courts in Sydney, Australia.

   Signed sealed and delivered by the parties:

CONTRACTOR:…… **ABN/ACN:**……..……	**AUDITOR:**…… **ABN/ACN: ..**……
Authorised Signature: _____	Authorised Signature: _____
Name: _____	Name: _____
Title : _____ Date: _____	Title : _____ Date: _____

Schedule 6 smartbuy® Requirements

1. smartbuy® Licence

1.1 The Board grants to the Contractor a non-exclusive, non-transferable, revocable licence to use smartbuy® for the performance of its obligations under this Agreement.

2. Authorised User

2.1 The Board may approve a person nominated by the Contractor and allow such person to access or use smartbuy® and become an Authorised User or an Administrator.

2.2 The Board may in its discretion decline to accept a person nominated by the Contractor as an Authorised User or an Administrator, without stating its reasons.

3. Contractor Obligations

3.1 The Contractor must provide any information that is reasonably required by the Board for use by smartbuy® including Contractor Information. The Contractor must ensure that all information provided to the Board (including maintaining information in the smartbuy® system) is current, correct, and complete at all times. The Contractor must immediately notify the Board of any changes required to the Contractor Information.

3.2 The Contractor agrees that Contractor Information will be published on smartbuy® by the Board. Contractors are responsible to ensure that Designated and Nominated Sub-Contractors are aware that their information will be published by the Board on smartbuy® as a part of Contractor Information.

3.3 The Contractor must:

a) conform to the Board's current password policies;

b) comply with all directions given by the Board in relation to the Contractor's access and/or use of smartbuy®; and

c) ensure that Transactions are only made for and on behalf of the Contractor and in accordance with this Agreement

d) provide the Board with an appropriate number of dedicated personnel to ensure the appropriate use of smartbuy®.

4. Catalogues

4.1 The Board requires the Contractor (unless otherwise specified by the Board) to take responsibility to update and actively maintain Catalogue Information provided by the Contractor on smartbuy®, or its Externally Hosted Catalogue.

4.2 The Contractor is responsible for the accuracy and completeness of Catalogue Information including any images supplied by the Contractor.

4.3 The Contractor is required to provide Catalogue Information to an acceptable data standard, approved by the Board. Catalogue Information must include all required item attributes including United Nations Standards Products & Services Codes (UNSPSC). The Contractor may either provide developed Catalogue Information to the Board or may request the Board to provide it with assistance, at a fee.

4.4 The Board may transform data provided by the Contractor in order to load it into smartbuy® however the values and meaning of the data will not be modified without the prior agreement of the Contractor.

4.5 If the Board produces formatted Catalogue Information for the Contractor, then the Contractor must ensure that the formatted Catalogue Information is current, correct, and complies with its obligations under this Agreement.

4.6 The Board may review any Catalogue Information and require the Contractor from time to time to update or take off-line its existing Catalogue Information, add new

Catalogue Information and/or verify that the Catalogue Information is accurate, current and in accordance with its obligations under this Agreement or applicable Codes and Standards.

4.7 The Board reserves the right to audit the Contractor's Externally Hosted Catalogue Information from time to time for compliance with this Agreement.

4.8 The Contractor may only make available information or data, including any Catalogue Information in an Externally Hosted Catalogue to NSW agencies with the Board's prior written consent. Where such approval is given the Contractor will provide the Board with administrator access to it's Externally Hosted Catalogue to enable the Board to conduct audits as required.

4.9 When approved to connect an Externally Hosted Catalogue, the Contractor must set up accounts for Eligible Customers within two working days from receipt of lodgement of a completed request and ensure that all Eligible Customers can access Catalogue Information.

4.10 Externally Hosted Catalogues shall not provide functionality that allows Eligible Customers to directly place orders for Deliverables. The Contractor agrees that, after an Eligible Customer has finished its browse activities, the Customer Contract for the Deliverables in Externally Hosted Catalogues must be transmitted via smartbuy®.

4.11 The Contractor's Externally Hosted Catalogue(s) should be available 7 days a week excluding any scheduled maintenance. Contractors must, in relation to their Externally Hosted Catalogues, give the Board reasonable prior notice of any scheduled maintenance and the time it will occur. The Contractor agrees to monitor the performance of its system and notify the Board immediately of any outage of its Externally Hosted Catalogue, except for any scheduled maintenance that the Contractor has notified the Board about.

4.12 The Contractor agrees to nominate in writing to the Board within 2 days of entry into this Agreement a person who can be contacted between 9am and 5pm during normal business days to receive and respond to enquiries relating to its Externally Hosted Catalogues.

4.13 The Contractor agrees to include on its webpage a customised error message confirming that the error is with the Externally Hosted Catalogue and not with smartbuy®.

5. Provision and Updating of Catalogue Information

5.1 The Contractor is required to provide electronic Catalogue Information in a smartbuy® format acceptable to the Board no later than 30 days from the commencement of this Agreement, inclusive of Catalogue Information specific to particular Eligible Customers.

5.2 All Catalogue Information including that pertaining to particular Eligible Customers must be updated in strict accordance with the frequency and conditions outlined in this document from the date on which the Catalogue Information is initially hosted on smartbuy® as per clause 4 above.

6. Availability

6.1 The Board may in its discretion limit or suspend the Contractor's access or use of smartbuy® during the Term of this Agreement.

6.2 Unless otherwise notified by the Board, smartbuy® will be accessible 7 days a week except during any necessary scheduled maintenance, unscheduled maintenance or unavailability caused by a circumstance beyond the reasonable control of the Board or its third party suppliers.

6.3 The Board will endeavour where reasonably practicable to notify the Contractor of any:

a) changes or upgrades to smartbuy®'s functionality that materially affect the Contractor's use of smartbuy®;

b) changes in equipment or configuration requirements of smartbuy® that materially affects the Contractor's ability to access and use smartbuy®.

6.4 The Board agrees to make available the NSW Procurement Client Support Centre to assist the Contractor in relation to any defects it experiences in the operation or functionality of smartbuy®. The Contractor agrees to report any issues or defects to the Client Support Centre on 1800 NSW BUY (679 289) or *NSWP_Support@commerce.nsw.gov.au* Unless the Contractor is otherwise notified by the Board, the Client Support Centre will be available from 8.30 am to 5.00 pm Monday to Friday, excluding public holidays. The Board may change the times during which the Client Support Centre is available from time to time.

7. smartbuy® Security

7.1 smartbuy® security systems have been created to protect buyers, suppliers and information maintained on or transmitted from or to smartbuy®.

7.2 Key elements of the security regime include:

a) Data Centre certified to BS7799, ASIO T4 rating and Suntone 2 Accreditation;
b) Robust firewalls;
c) Multi level system design;
d) Virus protection;
e) Password protection and restricted access permissions;
f) Intrusion detection systems;
g) Audit trails of user activities;
h) Where encryption is used, HTTPS protocol with 128 bit technology has been selected;
i) Programme of system upgrades to ensure security compliance.

7.3 The Contractor must:

a) have in place procedures to prevent any unauthorised use of smartbuy® by any person on its behalf (including Administrators, Authorised Users or an unauthorised third party) and these procedures must include provision to ensure its Administrators and Authorised Users are prevented from accessing or using smartbuy® upon them ceasing to be authorised to do so;

b) make all reasonable efforts to ensure that any information (including documents) that it transmits via smartbuy® will be free from viruses, worms or trojan horses or any other malicious program that is capable of causing damage to smartbuy® or smartbuy®'s users;

c) make all reasonable efforts to ensure that its systems are secure and are kept up to date with adequate anti-virus software;

d) notify the Board immediately of any significant security breaches that it suffers or threats that it is aware of.

7.4 The Contractor acknowledges that user logins and passwords used to access smartbuy® are transmitted using HTTPS protocol. Delivery of business documents (such as purchase orders and/or Invoices) is done through the following mechanisms, depending on the election of the Contractor:

a) Facsimile;

b) Unencrypted emails;

c) SFTP: File Transfer Protocol over Secure Sockets Layer (SSL) (Secure Shell (SSH) available on request);

d) HTTPS protocol: Hypertext Transport Protocol over Secure Sockets Layer (SSL).

7.5 While the Board will make reasonable endeavours at all times to make smartbuy® secure, the Board does not guarantee:

a) the security of smartbuy®, the internet, and any other system, including the system used by the Board to access or use smartbuy®;

b) that the delivery of business documents will be uninterrupted or secure;

c) that smartbuy® will be uninterrupted, timely, secure or error-free;

d) that smartbuy®, the internet, and any other system, including the system used by the Contractor, will be free of viruses or errors.

The Contractor must immediately notify the Board if it suspects, becomes aware, or has knowledge of any unauthorised use of smartbuy® by another person.

7.6 The Board may provide access and password details ("Passwords"):

a) to Administrators to be supplied to Authorised Users; and/or

b) directly to the e-mail addresses of Authorised Users who are acceptable to the Board.

7.7 The Contractor must take all reasonable steps to protect and keep secret any Passwords that the Board provides to it as per clause 7.6. The Contractor acknowledges and agrees that Board will rely on their use of a Password as conclusive evidence of their identity and authority, without further investigation. The Contractor must immediately notify the Board if it suspects, knows about or has knowledge that a Password has become compromised or known to another person and/or of any unauthorised use of a Password by another person has occurred, as per clause 7.5.

8. Minimum Configuration

8.1 To access and use smartbuy® TRADE the Contractor must have the following minimum configuration and the Contractor warrants that it has:

a) Windows 95, 98, 2000 or XP, IE 5.5 or later, a recommended video resolution of 1024X768; and

b) will configure its web browser to use SSL3.0 and ensure that the auto-complete or similar function is switched off for "Contractor name and passwords on forms".

8.2 These configurations may be varied by the Board due to changes or upgrades to smartbuy® from time to time. The Board will, wherever practicable, notify the Contractor of any variations to the configurations. The Contractor acknowledges that any access speed to smartbuy® and the performance of smartbuy® is limited by the Contractor's Internet service or other infrastructure and equipment.

8.3 If the Contractor has any queries in relation to these configuration requirements it may contact the Client Support Centre .

9. Improper Use of smartbuy®

9.1 The Contractor must not intentionally, recklessly or negligently interfere with any other parties' use of smartbuy®. The Contractor must not use smartbuy® or any service provided by the Board to post or transmit any information or provide a link to any third party website that:

a) defames, threatens or menaces any person;

b) breaches any law or regulation or infringes a third party's rights;

c) is indecent, pornographic or obscene;

d) knowingly transmits any virus, computer programme, code, device, product, components or other disabling feature that prevents, inhibits or impairs the performance of smartbuy®;

e) is an unsolicited commercial electronic message promoting the supply of goods or services.

9.2 The Contractor must ensure that its employees, officers and agents view or access any material published or made available on smartbuy® TRADE and/or smartbuy® CONNECT in accordance with this Agreement.

9.3 The Contractor must not use smartbuy® to sell, buy or dispose of, or attempt to sell, buy or dispose of any goods or services that are not specified by the Board under this contract, are unlawful or unauthorised.

10. Disclaimer

10.1 The Board makes no warranties in relation to the condition, fitness, merchantability, quality and title of the Deliverables purchased by the Customer using smartbuy®. To the extent permitted by law, the Board expressly excludes all conditions, warranties and terms whether express, implied, or statutory, which would otherwise be implied by law, conduct or otherwise into this Agreement.

11. Privacy

11.1 The Contractor warrants, in respect of any personal information provided in connection with the use of smartbuy®, that the information is accurate, up to date and complete, and that individuals to which the personal information refers authorise its collection and are aware:

a) that personal information is being collected, and will be held by the Board at the address shown in smartbuy® or by its third party suppliers;

b) that the information is being collected for the purpose of managing smartbuy®, and the administration of this Agreement, and may be made available to Eligible Customers for those purposes;

c) whether the supply of the information by the individual is required by law or is voluntary, and any consequences for the individual if the information (or any part of it) is not provided; and

d) of the existence of any right of access to, and correction of, the information.

11.2 The Contractor acknowledges that its use of smartbuy® indicates its knowledge and acceptance of the privacy policy displayed on smartbuy®. smartbuy® may contain links to other websites. The Board is not responsible for the privacy practices or the content of such sites. The Board requires the Contractor to read the privacy statements in these linked sites, as their privacy policies may differ from those of the Board.

12. Integration with smartbuy® CONNECT

12.1 All electronic documents transmitted through smartbuy® TRADE are routed via smartbuy® CONNECT. smartbuy® CONNECT may also be used for document transmission directly between Eligible Customers and Contractors, without passing through the smartbuy® TRADE.

12.2 The following Transmission Types and Document Types are supported by smartbuy® CONNECT. The combination of Transmission Type and Document Type is termed a Trading Channel:

Transmission Type	Document Type	Trading Channel
HTTPS	xCBL3.0 (XML)	HTTPS/xCBL3.0
SFTP	CSV	SFTP/CSV
Email (SMTP)	PDF	Email/PDF
Fax	PDF	Fax/PDF

12.3 smartbuy® CONNECT supports the following business documents via the Trading Channels outlined above.

a) PO

b) PO Change

c) PO Acknowledgement

d) Receipt

e) Receipt Change

f) Advanced Shipping Notice

g) Invoice

h) Technical Message Acknowledgement

12.4 Contractors must adhere to the smartbuy® Transmission specifications and smartbuy® Document specifications for the Trading Channel selected (specifications available on request If you require more information contact the NSW Procurement Client Support Centre on 1800 NSW BUY (679 289) or *NSWP_Support@commerce.nsw.gov.au*). For all documents implemented, Contractors must be capable of reading and actioning all mandatory and optional fields as defined in the document specifications.

12.5 The Board may assist in the development of an estimate of the costs of any integration to smartbuy® CONNECT. Firm pricing cannot be determined until the conclusion of a specific implementation planning study. Costs will vary depending upon the level of integration and their capability. Any integration of their systems with smartbuy®, including any Externally Hosted Catalogues may only take place with the Board's prior consent. The Contractor acknowledges that they will support and fund the establishment, maintenance and regular content update costs associated with integrating their systems with smartbuy® CONNECT. The Contractor is responsible and liable for any damage or claim that the Board suffers or incurs resulting from or in connection with the integration or interoperation of their systems with smartbuy®.

13 Invoices

13.1 It is a requirement that the Contractor provides electronic invoices to smartbuy® for all purchases by all NSW Government agencies against this Agreement - irrespective of how the purchase order is received (for example, via fax, telephone, mail, vendor online ordering system, etc). Contractors must send invoices via one of three channels:

a). Via the HTTPS/xCBL3.0 Trading Channel adhering to the smartbuy® HTTPS Channel Specification and the smartbuy® xCBL3.0 Document Specification. Contractors are responsible for all costs associated with implementing and maintaining the channel.

b). Via the SFTP/CSV Trading Channel adhering to the smartbuy® SFTP Channel Specification and the smartbuy® CSV Invoice Document Specification. Contractors are responsible for all costs associated with implementing and maintaining the channel.

c). Via a hosted web-portal provided by smartbuy® that allows Contractors to enter invoices online.

14 Externally Hosted Catalogues

14.1 Where Contractors are required to provide an Externally Hosted Catalogue the catalogue must utilise the OCI v3.0 protocol over HTTPS for both inbound and outbound requests.

Schedule 7 Performance Management

Time Management

- ability to achieve milestones and completion of the works
- timely allocation of appropriate resources management of delays due to inclement weather management of industrial conditions
- fair consideration of delays caused by the Principal or other parties, outside the Contractor's control

Standard of Work

- standard of work as measured against the specification.
- remedial work required
- conformance with specified performance criteria compliance with specified tolerances and finishes
- rectification of defects

Personnel/Sub-Contractors

- adequacy of the number of site personnel engaged by the Contractor in terms of efficient use of resources for the work
- control of personnel
- payment of workers of all monies due in respect of their employment
- establishment of site protocols
- effective coordination and flow of trades on site
- observance of site rules and procedures
- compliance with NSW Government Security of Payment provisions
- suitability of workers including compliance with the requirements set out in the NSW Government *for Code of Practice Procurement* including management, administrative, scientific or industry skills and overall experience relevant to the tasks undertaken.
- compliance with contractual and legal obligations with respect to subcontractors, consultants and suppliers
- payment to all subcontractors, consultants and suppliers in accordance with contract conditions

Contract Administration

- adequacy of documentation in meeting the requirements of the contract
- timeliness of the provision of information such as quotations, drawings, reports or other documentation
- timeliness of submission of claims for payment including the adequacy of supporting evidence and provision of statutory declarations required by the contract accuracy of details in claims for payment including rates charged, variations

Co-Operative Relations

- co-operation in all matters relating to the contract and facility staff and occupants.
- promptly informing of anything which is likely to affect the timing, cost or quality of the Works.
- commitment to a co-operative non-adversarial approach through open and effective communication with litigation reserved as a last resort
- evidence of a co-operative culture

OH&S/Environmental Management

- compliance with requirements in the NSW Government's *OHS Management Systems Guidelines*
- compliance with Project OH&S and Environmental Management Plan or Site-specific Safety Management Plan.
- compliance with safety issues specifically nominated in the contract and/or the Contractor's OH&S Management System/plan for the contract

- quality of and compliance with Safe Work Method Statements
- risk identification, assessment and management
- the number of infringement notices and directions issued to the Contractor concerning safety or environmental management
- results of audits
- fulfilling the Contractor's obligations for subcontractor OH&S management
- compliance with WorkCover Codes of Practice
- accidents and/or serious incidents
- evidence of a safety and environmentally aware culture
- compliance with environmental obligations

Solar Power Unit Performance

- Actual solar generation (kWh) versus predicted solar generation (kWh)
- Number of breakdowns

Schedule 8 Expert Determination Procedure

1. Questions to be determined by the Expert

1.1 The expert must determine for each issue the following questions (to the extent that they are applicable to the issue):

1.1.1 Is there an event, act or omission which gives the claimant a right to compensation:
under the Agreement:
(a) for damages for breach of the Agreement, or
(b) otherwise in law?

1.1.2 If so:
what is the event, act or omission?
(a) on what date did the event, act or omission occur?
(b) what is the legal right which gives rise to the liability to compensation?
(c) is that right extinguished, barred or reduced by any provision of the Agreement, estoppel, waiver, accord and satisfaction, set-off, cross-claim, or other legal right?

1.1.3 In the light of the answers to clauses 1.1.1 and 1.1.2 of this Expert Determination Procedure:
(a) What compensation, if any, is due from one Party to the other and when did it fall due?
(b) What interest, if any, is due when the expert determines that compensation?

1.2 The expert must determine for each issue any other questions required by the parties, having regard to the nature of the issue.

2. Submissions

2.1 The procedure for submissions to the expert is as follows:

2.2 The Party to the Agreement which has referred the issue to Expert Determination must make a submission in respect of the issue, within 15 business days after the date of the letter of engagement referred to in clause 15.5.3 of the Agreement.

2.3 The other party must respond within 15 business days after receiving a copy of that submission. That response may include cross-claims.

2.4 The Party referred to in clause 2.2 may reply to the response, but must do so within 10 business days after receiving the response, and must not raise new matters.

2.5 The other Party may comment on the reply, but must do so within 10 business days after receiving the reply, and must not raise new matters.

2.6 The expert must ignore any submission, response, reply, or comment not made within the time given in clauses 2.2 to 2.5 of this Expert Determination Procedure, unless the Principal and the Contractor agree otherwise.

2.7 The expert may request further information from either Party. The request must be in writing, with a time limit for the response. The expert must send a copy of the response to the other Party, and give the other Party a reasonable opportunity to comment on the response.

2.8 All submissions, responses, replies, requests and comments must be in writing. If a Party to the Agreement gives information to the expert, it must at the same time give a copy to the other Party.

3. Conference

3.1 The expert may request a conference with both Parties to the Agreement. The request must be in writing, setting out the matters to be discussed.

3.2 The Parties agree that such a conference is considered not to be a hearing which would give anything under this Expert Determination Procedure the character of an arbitration.

4. Role of Expert

4.1 The Expert:

4.1.1 acts as an expert and not as an arbitrator;

4.1.2 must make its determination on the basis of the submissions of the Parties, including documents and witness statements, and the expert's own expertise; and

4.1.3 must issue a certificate in a form the expert considers appropriate, stating the expert's determination and giving reasons, within 12 weeks after the date of the letter of engagement referred to in clause 15.5.3 of the Agreement.

4.1.4 If a certificate issued by the expert contains a clerical mistake, an error arising from an accidental slip or omission, a material miscalculation of figures, a mistake in the description of any person, matter or thing, or a defect of form, then the expert must correct the certificate.

EXECUTED AS A DEED

SIGNED, SEALED AND DELIVERED by *<insert name and position of person signing>* For and on behalf of the **NEW SOUTH WALES STATE CONTRACTS CONTROL BOARD** for and on behalf of the Crown in right of the State of New South Wales but not so as to incur any personal liability in the presence of:)
)
)

Witness	*Signatory*
Print Name	*Print Name*

SIGNED by *<insert name of company>*,ACN *<insert ACN number>*in accordance with section 127 of the Corporations Act and in the presence of:)
)
)

<Director/Secretary>	*Director*
Print Name	*Print Name*

Schedule 9 Financial Security

THIS DEED is made the …… day of ……20…

BETWEEN [Name, ACN and address of financial institution])(**"Provider"**)

AND [STATE CONTRACTS CONTROL BOARD for and on behalf of the Crown in the right of the State of New South Wales] (**"Beneficiary"**)

IT IS AGREED

At the request of *Insert name of the Contractor's Company Name*, trading as "*Insert Cotnractor's Trading Name*," ACN Number *(Insert ACN Number)* ("**Customer**") and in consideration of, the Beneficiary accepting this undertaking in connection with the supply of Solar Power Systems, the Provider unconditionally undertakes to pay to the Beneficiary on demand in writing any sum or sums from time to time up to a maximum aggregate sum of twenty thousand dollars ($20,000) ("**Sum**"). The Provider unconditionally and irrevocably agrees to pay such moneys to the Beneficiary immediately without reference to the Customer and regardless of any notice given by the Customer to the Provider not to pay.

This undertaking is to continue until a notification has been received from the Beneficiary that the Sum is no longer required by the Beneficiary or until this undertaking is returned to the Provider or until payment to the Beneficiary by the Provider of the whole of the Sum or such part as the Beneficiary may require.

The Provider may at any time without being required to do so pay to the Beneficiary the Sum less any amount or amounts it may previously have paid under this undertaking or such lesser sum as may be required by the Beneficiary and thereupon the Provider shall cease to be liable.

This deed is governed by and must be construed in accordance with the laws of *[insert applicable State or Territory).*

EXECUTED AS A DEED

SIGNED, SEALED AND DELIVERED by *<insert name and position of person signing>* For and on behalf of the **NEW SOUTH WALES STATE CONTRACTS CONTROL BOARD** for and on behalf of the Crown in right of the State of New South Wales but not so as to incur any personal liability in the presence of:)
)
)

Witness	*Signatory*
Print Name	*Print Name*

SIGNED by *<insert name of company>*, ACN *<insert ACN number>*, a prudentially supervised institution by the Australian Prudential Regulation Authority (APRA), and in accordance with section 127 of the Corporations Act and in the presence of:)
)
)

<Director/Secretary>	*Director*
Print Name	*Print Name*

Solar Power Systems

1. Design And Construction 4

2. Care Of The Works And Other Property 4

3. Defects Liability Period 5

4 Contract and Statutory Requirements 5

4.1 Appointment as Principal Contractor 5

4.2 Site-specific Safety Management Plan 5

4.3 Safe Work Method Statements 6

4.4 Site Safety Rules 6

4.5 OHS Management Monthly Report 7

4.6 Incident Reports 8

4.7 Prohibition and Improvement Notices and On-The-Spot Fines 9

4.8 Electrical work on electrical installations 9

4.9 Independent Certification of Formwork 9

4.10 Failure to Comply 9

5 Hazardous Substances 9

5.1 Definition 9

5.2 Response to Unexpected Discovery 10

5.3 Responsibility For Decontamination 10

5.4 Decontamination By Principal/Customer 10

5.5 Decontamination By Contractor 10

6 Asbestos Removal 10

6.1 Requirement 10

6.2 Notification and Permit 11

6.3 Monitoring 11

6.4 Clearance Certificate 11

7. Site and Possession 11

8. Care of people and Property 11
9. Tools or Plant Required to Complete the Works 12
10 Environmental Management 12
10.1 Requirement 12
10.2 Environmental Management Plan 12
10.3 Incident reports 12
10.4 Failure to comply 12
11. Ecologically Sustainable Development 12
11.1 Requirement 12
11.2 Restricted timbers 12
12. Waste Management 13
12.1 Requirement 13
12.2 Monitoring 13
13. Pest Control 13
14. Standards 13
15. Prohibition on Site 14
16. Protection of Existing Flora 14
17. Industrial Relations management 14
19 Induction of Contractor's Personnel 15
20 Protection of Children and Other Vulnerable Persons 15
20.1 Employees 15
21 Photographic Identification on Cards 16
22 Temporary Services Required by the Principal 16
23 Interruption to Services 16
24 Site Access and Limitations 16
25 Sites with Heritage Significance 17
26 Advertising Signs and Sign Boards 17
27 Quality of Work 17
28 "Dial Before You Dig" 17

28.1: Location of Existing Services – Dial Before You Dig 17

28.2: Dealing with Existing Services 18

28.3: Resulting Cost and Delay 18

28.4: Notification 18

29 Additional Requirements 18

30 Special Requirements 18

SCHEDULES TO THE SPECIAL CONDITIONS OF CONTRACT 19

SCHEDULE 1 EMPLOYMENT REQUIREMENTS 19

SCHEDULE 2 ADDITIONAL REQUIREMENTS WHEN WORKING IN SCHOOLS 24

SCHEDULE 3 SITE-SPECIFIC SAFETY MANAGEMENT PLAN 25

SCHEDULE 4 STATUTORY DECLARATION 27

SCHEDULE 5 ENVIRONMENTAL MANAGEMENT PLAN 1

1. Design And Construction

1.1 The Contractor is to supply all materials and construct the Works in accordance with the Customer's design and any further development of the Customer's design allowed under the Contract. Minor items not included in the agreed design which are needed for the satisfactory completion of the Works are to be provided by the Contractor.

1.2 If the Contractor is to undertake design as part of the Works, the Contractor is to develop the Customer's design and submit the completed design comprising drawings, specifications, calculations and any statutory certificates required to the Customer within the agreed period.

1.3 The Contractor is not to depart from the Customer's design, unless directed by the Customer.

1.4 The Contractor's completed design is to comply with the Contract and be fit for the intended purpose of the Works which can be reasonably inferred from the Contract Documents.

1.5 The Customer is not bound to check the completed design for errors, omissions or compliance with the requirements of the Contract. Neither the Principal nor the Customer is liable to the Contractor for any claim whatsoever due to the Principal/Customer not detecting or notifying the Contractor of any errors, omissions or non-compliance with the requirements of the Contract in the completed design.

1.6 Responsibility for the completed design and its satisfaction of the Contract requirements remains solely with the Contractor and the Principal/Customer is relying on the Contractor's knowledge, skill and judgment to carry out this responsibility.

1.7 The Contractor is to grant to the Principal/Customer an irrevocable licence to use the Contractor's design for the Works. Such licence is also to include any subsequent repairs to, maintenance or servicing of (including the supply of replacement parts) or additions or alterations to the Works.

2. Care Of The Works And Other Property

2.1 From and including the date the Site is made available to the Contractor to the date of Completion of the Works, the Contractor is responsible for the care of the Works, constructional plant and things entrusted to the Contractor by the Principal/Customer for the purpose of the Works.

The Contractor is to make good at the Contractor's expense any damage which occurs to the Works while responsible for their care.

The Contractor is also liable for damage caused by the Contractor during the Defects Liability Period.

2.2 The Contractor is to indemnify and keep the Principal/Customer indemnified against any loss or damage to the property of the Principal (including existing property in, about or adjacent to the Works) and against any legal liability for injury, death or damage to property of others arising from the performance of the Works.

2.3 Nothing in Clause 2 relieves the Principal/Customer from liability for the Principal's/Customer's own default and defaults of others for whom the Principal/Customer is liable.

3. Defects Liability Period

3.1 The Contractor is to make good any part of the Works which is not in conformity with the Contract either at Completion or which becomes apparent during the Defects Liability Period stated in this clause.

3.2 The Principal's/Customer's Representative may direct the Contractor to correct, including remove or replace, any non-conforming work during the Defects Liability Period and specify a reasonable time within which the Contractor is to comply with the direction.

3.3 If the Contractor does not correct the non-conforming work within the time specified, the Principal's/Customer's Representative may have the work corrected by others.

3.4 The Principal's/Customer's Representative is to assess the reasonable costs of having the non-conforming work corrected by others and the Contractor is to pay the Principal/Customer those costs.

3.5 At the end of the Defects Liability Period the Principal is to pay the Contractor retention moneys or return any unconditional undertakings less any amounts the Contractor is to pay the Principal/Customer.

3.6 The Nominated defects liability period is 52 weeks from the time of completion of the job.

4 Contract and Statutory Requirements

4.1 Appointment as Principal Contractor

Unless instructed otherwise at time of order, the Contractor, having responsibility for the construction work at all times until the work is completed on a site, is appointed principal contractor and controller of the premises for the construction work under Clause 210 of the *Occupational Health and Safety Regulation 2001* (NSW), and is authorised to exercise such authority of the owner as is necessary to enable it to discharge the responsibilities of principal contractor and controller of premises imposed by the *Occupational Health and Safety Act 2000* (NSW) and Chapter 8 of the *Occupational Health and Safety Regulation 2001* (NSW).

4.2 Site-specific Safety Management Plan

Develop and implement a Site-specific Safety Management Plan for the contract that complies with the *OHSM Guidelines.*

Submit the Site-specific Safety Management Plan for the contract when requested by the Principal/Customer. The Contractor will not be allocated any work by the Principal/Customer until a complying Site-specific Safety Management Plan has been submitted.

Failure to obtain the Principal's/Customer's approval to the Site-specific Safety Management Plan and Safe Work Method Statements prior to commencing the Works will result in termination of the contract.

When requested by the Principal/Customer, submit a Site-specific Safety Management Plan for a specific site no later than 7 days before work commences. Do not start work before a complying Site-specific Safety Management Plan has been submitted.

4.3 Safe Work Method Statements

Prepare and implement Safe Work Method Statements that comply with the *OHSM Guidelines* for all work activities under the contract.

Details of licences, permits or certificates, as may be required to carry out any portion of the works, are to be clearly shown on the Safe Work method Statement.

Prepare Safe Work Method Statements for works at each site and submit to the Principal/Customer prior to commencing work. Work on site is not to proceed without authorisation by the Principal/Customer.

4.4 Site Safety Rules

Develop site safety rules that are equal to or better than the following minimum set of site safety rules, include them in the Site-specific Safety Management Plans and ensure implementation.

Site safety rules must make it a condition of entry to the applicable work site that all employees and visitors comply with their provisions, including:

- **Construction OHS Induction**. All persons must display evidence of completing OHS Induction training prior to being inducted to commence work on the Site.
- **Site Induction**. All persons working on the Site must attend a Site Induction prior to entering it. Visitors may enter a work site if, either, they first attend a Site Induction, or if they are accompanied by a person who has attended a Site Induction. All persons each day must sign in and out on the Site Register.
- **Safe Work Method Statements**. Safe Work Method Statements must be prepared and used for all work activities assessed as having a safety risk.
- **Toolbox Talks**. Weekly or more regular discussions must be held with workers to consult on site safety matters.
- **Safety Helmets, Safety Footwear and Safety Vests**. Safety helmets and steel-capped safety footwear must be worn by all supervisors, employees, and visitors in the construction area at all times. The footwear must comply with AS 2210. Safety vests must be worn when moving plant is present or work is undertaken near traffic.
- **Personal Protective Equipment** (PPE). PPE, such as safety eye protection, hearing protection, safety gloves and masks and the like, must be worn when welding, drilling and with all other tasks with similar risks.
- **Accidents and Incidents**. Accidents, incidents and injuries must be reported immediately to the Contractor's and applicable subcontractor's site representative in charge.
- **Alcohol and Drugs**. The consumption of, or being under the influence of, alcohol and illegal drugs on the Site is prohibited.
- **Amenities**. Access to clean toilets and meal facilities, cool, clean drinking water, and the other requirements of the WorkCover Code of practice: Amenities for construction work must be provided for all persons.
- **Electrical**. All electrical work and electrical plant must comply with the WorkCover Code of practice: Electrical practices for construction work.
- **Emergency evacuation**. Arrangements must be included in the Site Induction and clearly identified.
- **Excavations**. Barricading and signage for all excavations must be provided, with excavations 1.5 metres or more deep also to be benched, battered or shored. See the WorkCover Code of practice: Excavation.
- **Fire Prevention**. Fire prevention must be used by all persons on the Site. An appropriate fire extinguisher must be on hand for all welding sets and oxy acetylene work.

- **First Aid**. All persons requiring first aid treatment must contact the first aid officer who will administer the treatment and record the injury in the WorkCover Register of Injuries, including the person's name and the nature of the injury.

- **Hazardous Substances**. Chemicals and hazardous substances must be used and stored in compliance with up to date Material Safety Data Sheets (MSDS) and details recorded in the Register of Hazardous Substances.

- **Housekeeping.** Work areas must be kept clean and tidy, with rubbish and other safety hazards cleaned up promptly. All protruding nails must be removed immediately from timber.

- **Leads and Power Tools.** All leads, power tools and electrical equipment must be inspected and tagged by a qualified person prior to their use and then at monthly intervals. See the WorkCover Code of practice: Electrical practices for construction work.

- **Mobile Plant**. Every owner of plant must ensure plant is registered with WorkCover when required and operators are appropriately qualified. Plant must be fitted with working hazard lights/reversing lights and beepers. See the WorkCover Code of Practice for Moving Plant on Construction Sites.

- **Overhead Power Lines**. The requirements of the WorkCover Code of Practice – Work near Overhead Power Lines must be complied with.

- **Site Security and Public Access**. Security measures, including perimeter fencing, must be used to prevent unauthorised access to construction areas and ensure safe access and passage for all those on and adjacent to the Site. Security must comply with Clause 235 of the OHS Regulation 2001 and the WorkCover Position paper: The requirements for fencing.

- **Underground Services**. Prior to any underground work being carried out, services must be located using Dial Before You Dig, a services locator, potholing and the other precautions identified in the WorkCover Work Near Underground Assets Guideline.

- **Working at Height**. Working at heights must be in accordance with WorkCover requirements, including certification of formwork and scaffolding. See the WorkCover Guide to Safe Working at Heights.

4.5 OHS Management Monthly Report

When requested by the Principal, submit, no later than the seventh (7th) day of each month, an OHS Management Monthly Report, detailing *Inspection, testing and servicing* activities, *Internal reviews* and *Incident management and corrective action*, and including the information listed below, as evidence of the implementation of the Site-specific Safety Management Plan during the previous month.

Contract Details

- Contract
- Contractor
- Customer
- Location of site
- Contractor's representative
- Signature and Date
- Period Covered

Implementation of *Risk management* *(OHSM Guidelines* Section 5, element 1)

Summary of OHS inspections and reviews carried out to identify risks and hazards and ensure risk management controls are being implemented for:

- plant and equipment
- incoming products
- work site conditions
- adherence to and completeness of Risk Assessments, Safe Work Method Statements and Site Safety Rules
- work site access and exits

- personal protective equipment

Implementation of *OHS training* *(OHSM Guidelines* Section 5, element 3)
An up to date copy of the Induction Register and details of OHS training carried out.

Implementation of *Incident management* *(OHSM Guidelines* Section 5, element 4)
Details of:

- any OHS incidents or OHS issues, including non-compliance with OHS procedures and near misses
- implementation of incident management
- implementation of corrective action
- OHS statistics for entire the Contract including:

This Month
Total Cumulative
Number of Lost Time Injuries

	This Month	**Total Cumulative**
Number of Lost Time Injuries		
Number of Hours Worked		
Number of Hours Lost Due to Injury		
Lost Time Injury Frequency Rate LTIFR		
Number of OHS Management Audits		
Number of OHS Inspections		

Implementation of *Safe Work Method Statements* *(OHSM Guidelines* Section 5, element 6)
An up to date copy of the register of Safe Work Method Statements, including confirmation that the principal contractor has ensured that all Safe Work Method Statements comply with the *OHS Regulation 2001* and that their implementation is being monitored.

4.6 Incident Reports

Ensure compliance with the notification and other requirements of *OHS Regulation 2001* Clauses 341 and 344 for accidents, incidents and non-disturbance occurrences, including immediate notification of WorkCover where required.

Immediately notify the Principal/Customer of any accident or incident defined in *OHS Regulation 2001* Clauses 341 and 344.

Provide a written report to the Principal/Customer within twenty-four hours of the incident, giving details of the incident and evidence that notification requirements have been met.

When requested, provide an incident investigation report, including identification of the cause of the incident and corrective actions taken, in the form directed.

4.7 Prohibition and Improvement Notices and On-The-Spot Fines

Immediately notify the Principal/Customer of any Prohibition and Improvement Notice (PIN) or on-the-spot fine issued by WorkCover. Provide the Principal/Customer with a copy of the PIN or fine notice and written details of the corrective action taken by the Contractor and/or the applicable subcontractor to rectify the breach and to prevent recurrence.

4.8 Electrical work on electrical installations

In compliance with section 207 of the *OHS Regulation 2001*, ensure that electrical work on an electrical installation is not carried out while the circuits and apparatus of the part of the installation that is being worked on are energised, unless it is necessary to do so in the interests of safety and the risk of harm would be greater if the circuits and apparatus were de-energised before work commenced.

4.9 Independent Certification of Formwork

In this clause, the terms “qualified engineer” and “formwork” have the meanings given in Clause 209 of the *OHS Regulation 2001*. “Related Entities” means businesses, one of which is owned wholly or in part by the other or that have proprietors, directors, officers, shareholders or employees in common.

Inspection and certification of formwork, if required by Clause 233 of the *OHS Regulation 2001*, must be carried out by a qualified engineer who is not a proprietor, director, officer, or employee either of the entity carrying out the formwork erection or a Related Entity to that entity. In addition, if the Contractor carries out the design of the formwork, then the qualified engineer must not be a proprietor, director, officer or employee either of the Contractor or a Related Entity to the Contractor.

If such inspection and certification are required, the Contractor and any subcontractors involved must include the inspection and certification as actions in Safe Work Method Statements for the erection and use of formwork, and they must be hold points in the Contractor’s and subcontractors’ Inspection and Test Plans.

Submit formwork certification before commencing the use of the formwork. Do not use the formwork before this certification is submitted.

4.10 Failure to Comply

If at any time the Contractor has not carried out its obligations under the Contract in relation to occupational health and safety management, then notwithstanding any other provisions of the Contract, no payment will be due to the Contractor until the 7th day after the required action has been carried out.

5 Hazardous Substances

5.1 Definition

Hazardous Substance means a substance that is listed in the document entitled *List of Designated Hazardous Substances* published by Worksafe Australia; or a substance that fits the criteria for a hazardous substance set out in the document entitled *Approved Criteria for Classifying Hazardous Substances* published by Worksafe Australia.

Asbestos, material containing asbestos, polychlorinated biphenyl (PCB) and lead based paints are recognised as hazardous substances. Other substances in certain situations are also considered hazardous and therefore require controlled handling. Examples are glues, solvents, cleaning agents, paints, and water treatment chemicals.

Work involving stone, rock, concrete, masonry and such materials containing silica, is work under the Contract whether explicitly identified in the Specification or not. The Contractor is responsible for the control of any hazard which may arise from the presence of silica.

5.2 Response to Unexpected Discovery

If any hazardous substance not specified in work under the Contract is discovered on the Site the Contractor must suspend all work which may result in exposure to such hazardous substance and notify the Principal's/Customer's Representative immediately of the type of substance and its location.

With the initial notification, or as soon as practicable thereafter, submit details, including:

- the additional work and additional resources the Contractor estimates to be necessary to deal with the substance so that work and subsequent use of the Works may proceed safely and without risk to health
- the time the Contractor anticipates will be required to deal with the substance and the expected delay in achieving Completion;
- the Contractor's estimate of the cost of the measures necessary to deal with the substance; and
- other details reasonably required by the Principal's/Customer's Representative

The Contractor must, in planning and carrying out any work dealing with the substance take all reasonable steps:

- to carry out the work concurrently with other work wherever possible; and
- to otherwise minimise effects of the work on the Contractual Completion Date.

5.3 Responsibility For Decontamination

Control and decontamination of any hazardous substances is the responsibility of:

- the Principal, in respect of any such substances not identified in the Contract Documents, which are discovered on the Site; and
- the Contractor, in respect of any such substances identified in the Contract Documents.

5.4 Decontamination By Principal/Customer

Where the Principal/Customer is responsible for the control and decontamination of any hazardous substances, the Principal's/Customer's Representative may suspend the whole or any part of the Works until the hazardous substances are isolated or removed.

5.5 Decontamination By Contractor

Where the Contractor is responsible for the control and decontamination of the Site following the discovery of hazardous substances, handle, use, isolate, remove and dispose of such substances in accordance with statutory requirements.

The Environment Protection Authority or Waste Service NSW may advise of suitable disposal sites.

6 Asbestos Removal

6.1 Requirement

Where the Contractor is responsible for asbestos removal work, comply with the relevant statutory requirements, standards, codes and guidelines, including but not limited to the:

- Occupational Health and Safety Act 2000 (NSW)
- Occupational Health and Safety Regulation 2001 (NSW)
- WorkCover Authority of NSW requirements

- Australian Safety and Compensation Council Code of Practice for the Safe Removal of Asbestos 2nd Edition (2005)
- Australian Safety and Compensation Council Code of Practice for the Management and Control of Asbestos in Workplaces (2005)
- Australian Safety and Compensation Council Guidance Note on the Membrane Filter Method for Estimating Airborne Asbestos Fibres 2nd Edition (2005)
- Environmentally Hazardous Chemicals Act 1985 (NSW)
- Waste Avoidance and Resource Recovery Act 2001 (NSW)

6.2 Notification and Permit

Not less than seven days prior to commencing any asbestos removal work, notify the local office of WorkCover and the Principal/Customer of the intention to carry out that work.

Where the regulations require a licence for asbestos removal work, before the work commences, submit a copy of the current licence held by the entity that will undertake the work and a copy of any WorkCover permit required for the work.

6.3 Monitoring

Provide air monitoring by an independent testing authority on each day during asbestos removal and on completion of each area where removal has been undertaken.

6.4 Clearance Certificate

Submit to the Principal/Customer a clearance certificate from an independent testing authority at the completion of the asbestos removal work.

7. Site and Possession

The Customer is to give the Contractor possession of the site by the time stated in the Order.

The Customer is to give the Contractor sufficient possession to allow the Contractor to perform the Works but is not required to give the Contractor sole or uninterrupted possession of or access to the site.

The Contractor is to begin work on the site as soon as practicable after being given possession of the site by the Customer.

The Contractor is to give the Customer, agents and contractors reasonable access to the site for any purpose.

8. Care of people and Property

From and including the date the site is made available to the Contractor to the date of completion of the Works, the Contractor is responsible for the care of the Works, construction plant and things entrusted to the Contractor by the Principal/Customer for the purpose of the works.

The Contractor is to make good at the Contractor's expense any damage which occurs to the Site and Works while the Contractor is responsible for their care.

The Contractor is also liable for damage caused by the Contractor during the Defects Liability Period.

The Contractor must indemnify and keep the Principal/Customer indemnified against any loss or damage to the property of the Principal/Customer (including existing property in, about, or adjacent to the Works) and against any legal liability for injury, death or damage to property of others arising from the performance of the Works.

9. Tools or Plant Required to Complete the Works

The schedule of rates detailed in the Price Schedule include the provision of all normal trade tools, plant and normal access equipment necessary to complete the Works.

10 Environmental Management

10.1 Requirement

The Contractor must comply with the NSW Government *Environmental Management Systems Guidelines* available on the Internet at:
www.managingprocurement.commerce.nsw.gov.au/system/index_procurement_guideline_documents.doc

10.2 Environmental Management Plan

When requested by the Principal/Customer, develop and implement an Environmental Management Plan that complies with the *EMS* Guidelines.

The Contractor may elect to complete Schedule 5 Part E - **Environmental Management Plan**, adding objectives and actions as required to suit the risks/hazards associated with the work under the Contract, and implement the completed version as the Environmental Management Plan.

Submit the Environmental Management Plan no later than 7 days before construction work commences when requested by the Principal/Customer. Do not start construction work before a complying Environmental Management Plan has been submitted.

10.3 Incident reports

Ensure compliance with the notification and other requirements of the *Protection of the Environment Operations Act 1997 (POEO Act).*

Immediately notify the Principal/Customer of any pollution incident that may cause material harm to the environment, providing evidence that notification requirements of the POEO Act have been met, where applicable.

Report immediately the details of any waste removed from the Site and not disposed of at a lawful facility. When requested, provide an incident investigation report, including identification of the cause of the incident and corrective actions taken, in the form directed.

10.4 Failure to comply

If at any time the Contractor has not carried out its environmental management obligations under the Contract, then notwithstanding any other provisions of the Contract, no payment is due to the Contractor until the 7th day after the required action has been carried out.

11. Ecologically Sustainable Development

11.1 Requirement

Apply strategies to maximise the achievement of ecologically sustainable development in the design, construction and operation of the Works, including reducing pollutants, greenhouse gas emissions and demand on non-renewable resources such as energy sources and water.

11.2 Restricted timbers

Do not use the following timbers or their products for work under the Contract:

- rainforest timbers, unless certification is provided that they are plantation grown;

- timber from Australian high conservation forests.

12. Waste Management

12.1 Requirement

Implement waste minimisation and management measures, including:

- recycling and diverting from landfill surplus soil, rock, and other excavated or demolition materials, wherever practical;
- separately collecting and streaming quantities of waste concrete, bricks, blocks, timber, metals, plasterboard, paper and packaging, glass and plastics, and offering them for recycling where practical.

Ensure that no waste from the Site is conveyed to or deposited at any place that cannot lawfully be used as a waste facility for that waste.

12.2 Monitoring

Monitor and record the volumes of waste and the methods and locations of disposal.

Submit a progress report and a summary report when requested by the Principal/Customer, on the implementation of waste management measures, including the total quantity of material purchased, the quantity purchased with recycled content, the total quantity of waste generated, the total quantity recycled, the total quantity disposed of and the method and location of disposal in the form of a *Waste Recycling and Purchasing Report* available on the Internet at:

www.managingprocurement.commerce.nsw.gov.au/contract_management/cm_sf_waste_recycling_and_purchasing_report.doc

With the *Waste Recycling and Purchasing Report*, submit waste disposal certificates and/or company certification confirming appropriate, lawful disposal of waste.

13. Pest Control

Do not use any chemical pesticides or termicides for new construction work. Use preventive treatment by physical means to minimise the risk of pest infestations.

Chemical treatments may be used in existing buildings only as a last resort for the eradication of pest and termite infestations. Chemical pesticides used for this purpose must be registered by the National Registration Authority for Agricultural and Veterinary Chemicals and applied by a Pest Control Operator licensed by WorkCover.

Pest preventive methods must comply with AS 3660.1-2000 Protection of Buildings from Subterranean Termites (except for references to chemical soil barriers), as well as supplementary standards for existing buildings.

14. Standards

Where the Contract requires compliance with a standard or Code, unless otherwise specified that Standard or Code shall be the one current at the closing date for tenders, except for the Building Code of Australia, which shall be the one current at the date of completion of the Works.

Where the Contract refers to an Australian Standard it does not preclude the adoption of a relevant international standard.

15. Prohibition on Site

The Contractor shall not permit its employees to take animals, alcohol or illegal drugs on site. Smoking is not permitted on any site.

16. Protection of Existing Flora

Protect from all damage all trees and other plants that are shown or specified to be retained, or which are beyond the limits allowed to the Contractor or which need not be removed or damaged for maintenance or construction operations. All grassed areas to be fully restored to levels and growth as existing.

17. Industrial Relations management

17.1 Requirement

The Contractor must comply with the NSW Government *Industrial Relations Management Guidelines* . Submit, before beginning work on the Site, confirmation that the Contractor will comply with the industrial relations aspects of the NSW Government *Code of Practice for Procurement* and the associated Implementation Guidelines.

The Contractor must provide the Statutory Declaration at Schedule 3 with its invoice for payment.

17.2 Failure to comply

If at any time the Contractor has not carried out its obligations under this clause - **Industrial Relations Management,** then notwithstanding any other provision of the Contract, no payment is due to the Contractor until the 7th day after the required action has been carried out.

18. Register of Contractor's Personnel

The Contractor is to maintain a register of all personnel who will carry out any part of the Works.

The Contractor is responsible for submitting the register to the Ordering Officer within 28 days of the time of acceptance.

The register is to be maintained regularly to keep it up to date and is to be submitted for inspection by the Ordering Officer at three (3) monthly intervals as advised by the Principal/Customer.

The names and identification numbers of each employee are to be included on the service reports when submitted to the Ordering Officer.

The register is to include but not be limited to:

- All details about the employee ID Card etc
- Date when persons were issued with photo identification cards.
- Date identification cards returned.
- Date Induction Session (in accordance with clause 20) was conducted and lists those in attendance.
- Material presented at the induction session
- Specific job training undertaken during the term of the contract

Dates and certificates awarded at all induction courses attended as required by Statutory Regulations or site-specific requirements (e.g. Code of Conduct when working in facilities used by children).

19 Induction of Contractor's Personnel

The Contractor is to induct all personnel involved in the Works in all aspects of the Contract.

The induction of personnel is to include but not be limited to;

- Operation of the Contract
- Occupational Health and Safety and site evacuations/emergency procedures
- Site Access and Responsibilities, site risks, hazards, access and responsibilities
- Code of Conduct when working in facilities used by children
- Wearing of Identification Cards

20 Protection of Children and Other Vulnerable Persons

20.1 Employees

The Contractor must not employ or permit to be employed on work under the Contract at the Site a person whom the Principal/Customer advises the Contractor poses unacceptable risks to children or other vulnerable people cared for at that site.

The Contractor must not employ or permit to be employed on work under the Contract at the Site a person who has been convicted of a serious sex offence and is a prohibited person under the *Child Protection (Prohibited Employment) Act 1998* (NSW).
The Contractor must not employ or permit to be employed, on work under the Contract at the Site, any person who has not completed the *Prohibited Employment Declaration* available on the Internet at: *www.kids.nsw.gov.au*.

Completion of the *Prohibited Employment Declaration* must be included in all Site-specific inductions and compliance must be recorded in the Induction Register. (refer Schedule 1)

20.2 Code of behaviour

The Contractor must ensure that all persons working on the Site, including but not limited to the Contractor's employees and managers, consultants, subcontractors and suppliers (Contractor Employees) understand and comply with the requirements shown below:

- All Contractor Employees must gain permission to enter the school or facility before commencing work and may only enter approved areas. The Contractor's representative or where a subcontractor is working without the supervision of the Contractor, the subcontractor's representative must report their presence to the person in charge of the school or facility on arrival each day and record, in the Site Visit Log, the details of all Contractor's or subcontractor's employees working at that site that day.

- Contractor Employees should avoid talking with, touching or interacting with any children or residents or other users of the school or facility except where the work requires it or in an emergency or safety situation.

- Contractor Employees must only use approved toilets and other facilities, unless the person in charge of the school or facility gives written authority to use alternative arrangements.

- The work area must not be able to be used or accessed by children, or residents or other users of the school or facility while work is in progress. Clear signs and barricades (where appropriate) must be used to prevent any inadvertent or unauthorised access.

- Appropriate privacy must be maintained when working on toilets and similar facilities. Contractor Employees must ensure that toilets and similar facilities are not occupied or in use by children, residents or other users before entering to perform work, and that work does not continue when use of the facilities is required. Where practicable male employees should perform work on male facilities and female employees on female facilities.

- Contractor Employees must wear clothing that is tidy and in good condition, including a shirt and shorts, trousers or a skirt at all times.

- Contractor Employees should report any concerns about children's behaviour or child abuse to the person in charge of the school or facility.
- Contractor Employees must wear or carry an identity card at all times when on the Site.

20.3 Failure to Comply

If at any time the Contractor has not carried out its obligations under this clause – **Protection of children and other vulnerable people**, then notwithstanding any other provision of the Contract, no payment shall be due to the Contractor until the 7th day after the required action has been carried out.

21 Photographic Identification on Cards

The Contractor is to provide all staff, employees and Sub-Contractors' staff attending all sites with an identification card as authorisation to carry out work on the Contractor's behalf.

All Contractors' staff must wear their ID Card in a prominent easily seen position on their person at all times.

Contractors' staff must present this card on request from the Principal, the Customer, School Staff, Police or Security Patrol Officers.

By procising this card the Contractor is declaring that the cardholder has completed an induction into the Code for working on or near facilities used by Children.

22 Temporary Services Required by the Principal

The Principal/Customer will provide no temporary services to the Contractor.

The Contractor may use, free of charge, water and electricity from the existing outlets within the premises, subject to the use of those services not disrupting the normal operation of the premises in any way, not causing any associated problems such as overloading and not being abused or misused. Generally, only single-phase power is available.

Liaise with the Customer Representative before connecting to any such service to ensure that no disruption occurs and to ensure that access to them does not adversely impact on other aspects of the premises such as safety, security, free movement of staff etc.

The Contractor must satisfy himself that the existing water and electrical services meet it's needs and, where required, supplement them from other sources.

23 Interruption to Services

Where there is a possibility of interruption to any service, the Customer is to be notified of the time and likely duration of the disruption to normal services.

24 Site Access and Limitations

General

The Contractor is responsible for providing and maintaining access to the Works.

As far as practicable, use existing roads and tracks. If access is gained from an adjacent property, obtain the written permission of the owner.

Install temporary barricades fences, gates, signs, temporary access bridges, lighting, etc. necessary for the safety of workers, staff, occupants of the premises and the general public at all times. Maintain such devices for the full duration of the Works.

Compliance with Department of Commerce Code when Working in Facilities Occupied or Used by Children is mandatory.

Contractors and Subcontractors are to abide by the Department of Commerce Code for Working on or near facilities occupied or Used by Children – refer Schedule 1.

The Code states “All persons must read and certify that they have read and understood the code before commencing work and/or entering premises used by children.”

The Contractor is to ensure all persons who are performing duties under this Contract have read the code and certified their understanding of the requirements contained in the code and have agreed to abide by the code.

25 Sites with Heritage Significance

Contractors should be aware that sites can have heritage significance that can extend to and include fences, walls, trees, paving, etc, NOT JUST BUILDINGS.

The Contractor must ensure that all of their staff and Subcontractor’s staff are aware that some sites or parts of sites have been identified as having heritage significance. In such circumstances, take care to preserve the heritage.

It is critical when carrying out work on sites that have a heritage significance that the following is adhered to: -

- When components, sub-assemblies or minimum replacement sections are to be replaced, they must be exact replicas of the original (matching profile of timber, matching roof or floor tiles, etc). If difficulties are experienced obtaining exact replicas, advise the Ordering Officer.
- Stonework, especially sandstone, often has heritage significance. Care should be taken in matching mortar and materials.
- Cleaning of masonry to reveal deterioration or to remove harmful substances or graffiti should be done with care using low-pressure water jets with soft bristle brushes. Abrasive blasting and the use of power tools to clean joints are not permitted.

26 Advertising Signs and Sign Boards

The Contractor shall not display or erect any advertising signs at any site without the written approval of the Customer.

27 Quality of Work

The Contractor must supply materials (which are new, free from defects and suitable for the purpose and generally like for like unless directed otherwise) and use standards of workmanship and work methods which comply with the Contract, the Building Code of Australia, relevant Australian Standards and Commonwealth and State legislation and subordinate regulations, ordinances, by-laws, orders and proclamations.

28 “Dial Before You Dig”

28.1: Location of Existing Services – Dial Before You Dig

The Contractor is responsible for locating existing services.

Before commencing excavation the Contractor must obtain, from the Dial Before You Dig information service or all relevant public authorities or owners of underground services, written confirmation of the exact position of underground services at and around the Site, and verify and prominently mark the location of all underground services at the Site.

28.2: Dealing with Existing Services

Existing services (such as drains, watercourses, public utility, telecommunications, and other services) obstructing the Works or if damaged in the course of the Contract, must be dealt with as follows:

a) if the service is to be continued: repair, divert, relocate as required;

b) if the service is to be abandoned: cut and seal or disconnect and make safe as required

28.3: Resulting Cost and Delay

Where an existing service obstructs the Works and requires diversion or relocation, the Contractor must notify the Principal/Customer immediately with a description of work and estimated cost to carry out the diversion or relocation. When approved, an approval number will be given.

Where the Contractor for any reason whatsoever damages an existing service, the Contractor shall bear all costs and any delays for repairing or disconnecting the service.

28.4: Notification

The Contractor is to notify the Principal/Customer immediately upon the discovery of services obstructing the Works not shown in the Principal's Documents. Attention is drawn to General Conditions of Contract clause "Site Conditions".

29 Additional Requirements

Each Order placed under the Standing Offer Contract may include additional clauses relating specifically to that Order.

Such additional clauses may relate to site or Works requirements, special access provisions, specific requirements or any other matter.

These additional requirements will be conveyed to the Contractor at the time of requesting a quotation and will form a part of the Contract for that Order.

30 Special Requirements

Schedules 1 to 5 hereto describe requirements specific to individual Departments. These requirements form part of any Order placed with the Contractor for that Department.

SCHEDULES TO THE SPECIAL CONDITIONS OF CONTRACT

SCHEDULE 1 EMPLOYMENT REQUIREMENTS

Prior to commencing any work on the Contractor the Contractor, staff involved in the project and subcontractors must complete all of the attached forms and submit them to DET for processing and approval:

- Code for working on or near facilities occupied or used by children (FORM A)
- Prohibited Employment Declaration form (FORM B)
- Working with Children Background Check Consent form (FORM C)

Please not that no Work is to be undertaken unless DET notifies the Contractor that all proposed staff and subcontractors have received approval. Under no circumstances are uncleared staff permitted to undertake any Work on a DET site.

- Ensure that ***all*** of the information requested is supplied.
- It is essential to ensure that the applicant has been inducted in the Department of Commerce Code for working on or near facilities occupied or used by children.
- It is essential that each applicant meets the Industry OH&S Induction requirements of WorkCover and provides the required documentation as evidence of that Induction (attach copy of Construction Industry OHS Induction card – card number must start with "CGI").
- The employer must sight the original forms of identification noted on the application form ie. Passport, licence, etc and check that the passport photo supplied is that of the applicant. Proof of identification must add to a minimum of 100 points as required by the 100 point check under the *Financial Transaction Reports Act 1988 (Details attached)*. The Employer must sight original documents and certify copies and provide these certified copies with the application.
- The applicant and the employer must sign the forms.
- Each person (applicant) shall complete the Prohibited Employment Declaration Form (FORM A) and return with application.
- Each person (applicant) shall complete the Working with Children Background Check Consent Form (FORM B).
- If the information required is not supplied or if the forms are not signed, the forms will not be processed.
- Submit the completed forms and supporting documentation to the address noted

  NSW Department of Education and Training

NOTE: The Contractor is responsible for ensuring that all of its staff have photographic identification which to be worn at all times whilst they are on the premises of the NSW Department of Education and Training.

FORM A

PROHIBITED EMPLOYMENT DECLARATION

The *Commission for Children and Young People Act 1998* makes it an offence for a prohibited person (a person convicted of a serious sex offence, the murder of a child or a child-related personal violence offence, as well as a Registrable person under the *Child Protection (Offenders Registration) Act 2000)* to apply for or otherwise attempt to obtain, undertake or remain in, child-related employment. It does not apply if an order from the Industrial Relations Commission, Administrative Decisions Tribunal or Commission for Children and Young People, declares that the Act does not apply to a person in respect of a specific offence.

For further information on what is child-related employment see the *Working With Children Employer Guidelines*.

Section 33B of the *Commission for Children and Young People Act 1998* defines a serious sex offence as:

- an offence, involving sexual activity or acts of indecency, committed in New South Wales and that was
- punishable by penal servitude or imprisonment for 12 months or more; or
- an offence, involving sexual activity or acts of indecency, committed elsewhere and that would have been
- an offence punishable by penal servitude or imprisonment for 12 months or more, if it had been committed
- in New South Wales; or
- an offence under section 80D or 80E (sexual servitude) of the *Crimes Act 1900*, committed against a child; or
- an offence under Sections 91D-91G (child prostitution, other than if committed by a child prostitute) of the
- *Crimes Act 1900* or a similar offence under a law other than a law of New South Wales; or
- an offence under Section 91H, 578B or 578C (2A) (child pornography) of the *Crimes Act 1900* or a similar
- offence under a law other than a law of New South Wales; or
- an offence of attempting, or of conspiracy or incitement, to commit an offence referred to in the preceding
- paragraphs; or
- any other offence, whether under the law of New South Wales or elsewhere, prescribed by the regulations.

NOTE: A conviction for carnal knowledge is classified as a serious sex offence under this legislation.

Section 33B of the *Commission for Children and Young People Act 1998* defines a child-related personal violence offence as an offence committed by an adult:
• involving intentionally wounding or causing grievous bodily harm to a child; or
• of attempting, or of conspiracy or incitement, to commit such an offence.

Under *Commission for Children and Young People Act 1998*:
• it is an offence for a prohibited person to apply for or otherwise attempt to obtain, undertake or remain in child related employment;
• employers must ask existing employees, both paid and unpaid, and preferred applicants for child-related employment to declare if they are a prohibited person or not;
• all people in child-related employment must inform their employers if they are a prohibited person or remove themselves from child-related employment; and
• penalties are imposed for non compliance.

I am aware that I am ineligible to apply for or otherwise attempt to obtain, undertake or remain in, child-related employment if I have been convicted of a serious sex offence or child-related personal violence offence as defined in the *Commission for Children and Young People Act 1998*, or if I am a Registrable Person under the *Child Protection (Offenders Registration) Act 2000*.

I have read and understood the above information in relation to the *Commission for Children and Young People Act 1998*. I am aware that it is an offence to make a false statement on this form.

I consent to a check of my relevant criminal records, to verify the statements I have made here, being undertaken by the NSW Commission for Children and Young People for monitoring and auditing purposes in accordance with Section 36 (1)(f) of the *Commission for Children and Young People Act 1998*.

I declare that I am not a person prohibited by the Act from seeking, obtaining, undertaking or remaining in child related employment.

I understand that this information may be referred to the Commission for Children and Young People and/or to NSW Police for law enforcement purposes and for monitoring and auditing compliance with the procedures and standards for the Working With Children Check in accordance with Section 36 (1)(f) of the *Commission for Children and Young People Act 1998*.

All fields must be completed. Please use block letters.

Name: _____

Aliases (previous/other names): _____

Date of birth: _____

Signature: _____ Date: _____

Contact telephone number: _____ Contact Email: _____

NOTE: Seek legal advice if you are unsure of your status as a prohibited person
This form should be returned to Heritage and Building Services, PO Box 285 Doonside 2767.

FORM B

WORKING WITH CHILDREN BACKGROUND CHECK CONSENT

the working with children check

This form is to be completed by persons whose names are to be submitted for employment screening as part of the Working With Children Check.

No background checks can be completed on a person without this consent being provided.
Employers are required to sight applicant's original identifying documents.
All fields must be completed. Please use block letters.

Surname: Given name(s):

Previous names/aliases: Date of birth:

Place of birth (city, state, country): Gender: (Please tick) ❑ Male ❑ Female

Identification type (eg. Driver's licence/passport): Identification number:

Address:

Suburb/Town: State: Postcode:

Contact telephone number: Contact Email:

Title of position (eg. Carpenter): Type of position: (Please tick) ❑ Paid employee

I certify that the above information is accurate and understand that if I have provided false or misleading information it may result in a decision not to employ me, or, if already employed, may lead to my dismissal.

I am aware that if considered for child-related employment, several checks will be undertaken to ascertain my suitability, including:

1. a national criminal record check for charges and/or convictions (including spent convictions) for:
   - any sexual offence (including but not limited to, sexual assault, acts of indecency, child pornography, child prostitution and carnal knowledge);
   - any child-related personal violence offence;
   - any assault, ill treatment or neglect of, or psychological harm to a child and any registrable offence;

   punishable by imprisonment for 12 months or more.

   I understand that this check includes convictions or charges that:
   - may have not been heard or finalised by a court; or
   - are proven but have not led to a conviction; or
   - have been dismissed, withdrawn, or discharged by a court.
2. a check for relevant Apprehended Violence Orders taken out by a police officer or other public official for the protection of a child/ren;
3. a check for relevant employment proceedings involving an act of violence committed in the course of employment and in the presence of children or reportable conduct. Reportable conduct means any sexual offence, or sexual misconduct committed against, with or in the presence of a child (including a child pornography offence), any child-related personal violence offence, or any assault, ill treatment or neglect of a child, or any behaviour that causes psychological harm to a child.

I understand that a conviction for a serious sex offence (including, but not limited to, sexual assault, acts of indecency, child pornography, child prostitution and carnal knowledge) or child-related personal violence offence (including but not limited to, intentionally wounding or causing grievance bodily harm to a child) will automatically prohibit me from child-related employment. This includes a charge that is proven in court but does not proceed to a conviction. I am aware that if I am a Registrable person under the *Child Protection (Registrable Offenders) Act 2000,* I am prohibited from child-related employment.

I consent to these checks being conducted and am aware that if any relevant record is identified, additional information relating to that record may be sought by an Approved Screening Agency from sources such as courts, police, prosecutors and past employers to enable a full and informed estimate of risk.

I acknowledge that:

- the above information and any information obtained during the Working With Children background check may be collected and used by and/or disclosed to the Commission for Children and Young People or any Approved Screening Agency for the purposes of the Working With Children Check;
- the Commission for Children and Young People or any Approved Screening Agency may share the information obtained during the Working With Children background check with each other to support further estimates of risk arising from additional Working With Children background checks;
- the outcome of an estimate of risk conducted with information obtained through the Working with Children Check by the Approved Screening Agency may be provided to my current or prospective employers or an employer-related body (where applicable) only for background checking purposes;
- details of my relevant records will not be released to my current or prospective employers;
- any information obtained as part of this process may be used by Australian Police Services for law enforcement purposes, including the investigation of any outstanding criminal offences; and
- the information provided may be referred to the Commission for Children and Young People and/or to NSW Police for law enforcement purposes and for monitoring and auditing compliance with the procedures and standards for the Working With Children Check in accordance with Section 36 (1) (f) of the *Commission for Children and Young People Act 1998.*

Name: _____

Signature:_____Date:_____

ATTACH CERTIFIED COPIES OF FORMS OF IDENTIFICATION AS PER 100 POINT CHECK REQUIREMENTS

Proof of Identification – 100 Point Check

Identifying the preferred applicant accurately

Before you request a Photo Identification Card and Working With Children background check you must ask preferred applicants to provide documents to support their identity. This must include original documents adding up to a minimum of 100 points as required by the 100 Point Check under the *Financial Transaction Reports Act 1988*. A copy of these original documents shall be certified by the Employer and provided with the application.

The following lists set out the value of each document according to the 100 Point Check.

70 points

Name of preferred applicant verified from one of the following (more than one document from this list cannot be counted):

- Birth Certificate
- Birth Card issued by the NSW Registry of Births, Deaths and Marriages
- Citizenship Certificate
- Current Australian passport
- Expired Australian passport which has not been cancelled and was current within the preceding 2 years
- Current passport from another country or diplomatic documents.

For a preferred applicant under 18 years, one document from the above list, or the following, is sufficient:

- Identity of the applicant verified by an educational institution, either on a student card or a letter signed by the principal, deputy principal, head teacher, deputy head teacher or enrolment officer, confirming that the applicant currently attends the institution.

40 points

Name and photograph/signature of preferred applicant verified from one of the following (more than one document can be counted):

- Current driver photo licence issued by an Australian state or territory
- Identification card issued to a public employee
- Identification card issued by the Australian or any state government as evidence of a person's entitlement to a financial benefit
- Identification card issued to a student at a tertiary education institution.

35 points

Name and address of preferred applicant verified from any of the following (more than one document can be counted):

- Document held by a cash dealer giving security over property
- A mortgage or other instrument of security held by a financial body
- Council rates notice
- Document from current employer or previous employer within the last two years
- Land Titles Office record
- Document from the Credit Reference Association of Australia.

25 points

Name of preferred applicant verified from any of the following (more than one document can be counted):

- Current credit card or account card from a bank, building society or credit union
- Local council rates notices
- Current telephone, water, gas or electricity bill
- Foreign driver's licence
- Medicare Card
- Electoral roll compiled by the Australian Electoral Commission
- Lease/rent agreement
- Current rent receipt from a licensed real estate agent

- Records of a primary, secondary, or tertiary educational institution attended by the applicant within the last 10 years
- Records of a professional or trade association of which the applicant is a member.

SCHEDULE 2 ADDITIONAL REQUIREMENTS WHEN WORKING IN SCHOOLS

All personnel when attending work in schools must at all times wear their photographic identity card in a prominent easily seen position on their person in addition to any site specific identity symbol.

All personnel must report to the school's administration office on arrival and before departure, to record their visit at the school and to sign the School Site Visit Log-book.

Access to Sensitive Areas:

When working in sensitive areas, the Contractor is to erect appropriate signs advising that work is in progress and directing users elsewhere to the closest facilities available.

Special care must be taken when accessing or carrying out work in change rooms, bathrooms, toilets, showers etc. and generally work in such areas in schools is to be undertaken outside normal school hours.

The work may be performed during normal school hours only where alternative facilities are available and with the written approval of the School Principal.

The Ordering Officer is to advised when alternative facilities are not available and that the work required will need be performed at the "outside normal hours" schedule rate

Note: Normal school hours will vary, depending on the school's timetable. Work may be able to be programmed with the School Principal for early morning, late afternoon or on sports afternoon to enable the works to be completed quickly and without the additional cost of performing the work at the "out of normal hours" rate. The hours of operation for attending may be clarified with the Ordering Officer, when accepting the Work Order.

SCHEDULE 3 SITE-SPECIFIC SAFETY MANAGEMENT PLAN

In accordance with Conditions of Contract clause - **Occupational Health and Safety**, the Contractor must develop and implement a Site-specific Safety Management Plan that complies with the NSW Government **Occupational Health & Safety Management Systems Guidelines 2004** Please refer to **How to prepare Site-Specific Safety Management Plans and Safe Work Method Statements** (June 2004) Both documents are available from: **www.managingprocurement.commerce.nsw.gov.au/system/index_procurement_guideline_documents.doc**

The Contractor's Site-specific Safety Management Plan

For this contract the Contractor's Site-specific Safety Management Plan must:

- be on the Contractor's letterhead, and
- signed and dated by a senior manager, and
- **must cover**:
  - **Statement of responsibilities** – names and positions of people on site who will be responsible for OHS management, with a description of those responsibilities.
  - **Risk Management** – identified hazards associated with each work activity, with the risks assessed and actions proposed to eliminate or minimise the risks and methods for monitoring the risk controls documented. Include OHS risks identified by the Principal.
  - **OHS Training** – arrangements for OHS training, including Induction training and toolbox meetings.
  - **Incident and Emergency Management** – arrangements for managing accidents and near misses, with the name(s) of responsible persons and their contact details, including after-hours contact.
  - **Site Safety Rules** – a copy of the rules, which must also be displayed on the site and make it a condition of entry to the site that all employees and visitors comply with their provisions, and which must include as a minimum:
    - **Construction OHS Induction**. All persons must display evidence of completing OHS Induction training prior to being inducted to commence work on the site.
    - **Site Induction**. All persons working on the site must attend a Site Induction prior to entering it. Visitors may enter the site if, either, they first attend a Site Induction, or they are accompanied by a person who has attended a Site Induction. All persons each day must sign in and out on the Site Register.
    - **Safe Work Method Statements**. Safe Work Method Statements must be prepared and used for all work activities assessed as having a safety risk.
    - **Toolbox Talks**. Weekly or more regular discussions must be held with workers to consult on site safety matters.
    - **Safety Helmets, Safety Footwear and Safety Vests**. Safety helmets and steel-capped safety footwear must be worn by all supervisors, employees, and visitors in the construction area at all times. The footwear must comply with AS 2210. Safety vests must be worn when moving plant is present or work is undertaken near traffic.
    - **Personal Protective Equipment** (PPE):. PPE, such as safety eye protection, hearing protection, safety gloves and masks and the like, must be worn when welding, drilling and with all other tasks with similar risks.
    - **Accidents and Incidents**. Accidents, incidents and injuries must be reported immediately to the Contractor's and applicable subcontractor's site representative in charge.
    - **Alcohol and Drugs**. The consumption of, or being under the influence of, alcohol and illegal drugs on the site is prohibited.
    - **Amenities**. Access to clean toilets and meal facilities, cool, clean drinking water, and the other requirements of the WorkCover **Code of practice: Amenities for construction work**, must be provided for all persons.
    - **Electrical**. All electrical work and electrical plant must comply with the WorkCover **Code of practice: Electrical practices for construction work**.
    - **Emergency evacuation**. Arrangements must be included in the Site Induction and clearly identified.
    - **Excavations**. Barricading and signage for all excavations must be provided, with excavations 1.5 metres or more deep also to be benched, battered or shored. See the WorkCover **Code of practice: Excavation**.
    - **Fire Prevention**. Fire prevention must be used by all persons on the site. An appropriate fire extinguisher must be on hand for all welding sets and oxy acetylene work.
    - **First Aid**. All persons requiring first aid treatment must contact the first aid officer who will administer the treatment and record the injury in the WorkCover Register of Injuries, including the person's name and the nature of the injury.

- **Hazardous Substances**. Chemicals and hazardous substances must be used and stored in compliance with up to date Material Safety Data Sheets (MSDS) and details recorded in the Register of Hazardous Substances.
- **Housekeeping.** Work areas must be kept clean and tidy, with rubbish and other safety hazards cleaned up promptly. All protruding nails must be removed immediately from timber.
- **Leads and Power Tools.** All leads, power tools and electrical equipment must be inspected and tagged by a qualified person prior to their use and then at monthly intervals. See the WorkCover **Code of practice: Electrical practices for construction work**.
- **Mobile Plant**. Every owner of plant must ensure plant is registered with WorkCover when required and operators are appropriately qualified. Plant must be fitted with working hazard lights/reversing lights and beepers. See the WorkCover **Code of Practice for Moving Plant on Construction Sites**.
- **Overhead Power Lines**. The requirements of the WorkCover **Code of Practice – Work near Overhead Power Lines** must be complied with.
- **Site Security and Public Access**. Security measures, including perimeter fencing, must be used to prevent unauthorised access to construction areas and ensure safe access and passage for all those on and adjacent to the site. Security must comply with Clause 235 of the OHS Regulation 2001 and the WorkCover **Position paper: The requirements for fencing**.
- **Underground Services**. Prior to any underground work being carried out, services must be located using Dial Before You Dig, a services locator, potholing and the other precautions identified in the WorkCover **Work Near Underground Assets Guideline**.
- **Working at Height**. Working at heights must be in accordance with WorkCover requirements, including certification of formwork and scaffolding. See the WorkCover **Guide to Safe Working at Heights**.

- **Safe Work Method Statements** - for activities identified as having an OHS risk, which must:
  - be on the letterhead of the organisation carrying out the work, showing the name and registered office address of the organisation;
  - be signed as authorised by a senior manager, and dated; and
  - **must describe:**
    - work activities to be undertaken, including the step-by-step sequence involved in doing the work
    - potential hazards and health and safety risks associated with each step of the work activity
    - safety controls that will be in place to minimise these hazards and risks
    - all health and safety instructions to be given to persons involved with the work activity
    - safety legislation, codes or standards applicable to the work activity and where these are kept
    - names and qualifications of those who will supervise the work activity and inspect and approve for use work areas, work methods, protective measures, plant, equipment and power tools
    - the training required, and when it was or will be given each person involved with the work activity
    - names of all those involved with the work activity and those who have been or will be or have been relevantly trained, and the names and qualifications of those responsible for training them
    - plant and equipment that will most likely be used in the work activity (eg. ladders, scaffolds, grinders, electrical leads, welding machines, fire extinguishers and the like)
    - any WorkCover permits required to complete the work activity
    - the inspection and maintenance checks that have been or will be carried out on the equipment listed prior to its use.

SCHEDULE 4 STATUTORY DECLARATION

	Definitions	Oaths Act (NSW) Ninth Schedule
The Principal is	.....	
The Contractor is	.....……	
	ACN/ABN.....	
The Contract is	Contract No. ……	
	Contract Title……	
	Dated .....(Date of Contract) between the party identified as the Principal and the party identified as the Contractor.	

Declaration

Full name I, ...

Address of .....

.....

do hereby solemnly declare and affirm that:

Insert position title of the Declarant

1 I am the representative of the Contractor in the Office Bearer capacity of _____

2 I am in a position to make this statutory declaration about the facts attested to.

REMUNERATION OF CONTRACTOR'S EMPLOYEES ENGAGED TO CARRY OUT WORK IN CONNECTION WITH THE CONTRACT

3 All remuneration payable to the Contractor's relevant employees for work done in connection with the Contract to the date of this statutory declaration has been paid and the Contractor has made provision for all other benefits accrued in respect of the employees.

Relevant employees are those engaged in carrying out the work done in connection with the Contract.

Remuneration means remuneration or other amounts payable to relevant employees by legislation, or under an industrial instrument, in connection with work done by the employees [s127 (6) of the Industrial Relations Act 1996].

REMUNERATION OF THE EMPLOYEES OF SUBCONTRACTORS ENGAGED TO CARRY OUT WORK IN CONNECTION WITH THE CONTRACT

4 The Contractor *is/is not* a principal Contractor for the work done in connection with the Contract, as defined in section 127 of the Industrial Relations Act 1996.
(Delete the words *in italics* that are not applicable.)

5 Where the Contractor is also a principal Contractor for work done in connection with the Contract, the Contractor has been given a written statement in its capacity of principal Contractor under section 127(2) of the Industrial Relations Act 1996 by each subContractor in connection with that work stating that all remuneration payable by each subContractor to the subContractor's relevant employees for work done in connection with the Contract to the date of this declaration has been paid, and each subContractor has made provision for all other benefits accrued in respect of each subContractor's employees.

6 I am aware that the Industrial Relations Act 1996 requires any written statement provided by subContractors must be retained for at least 6 years after it was given and declare that the Contractor has accordingly made arrangements for the secure retention of the written

statements.

WORKERS COMPENSATION INSURANCE OF THE CONTRACTOR'S WORKERS

7 All workers compensation insurance premiums payable by the Contractor to the date of this statutory declaration in respect of the work done in connection with the Contract have been paid. This statutory declaration is accompanied by a copy of any relevant certificate of currency in respect of that insurance.

WORKERS COMPENSATION INSURANCE FOR WORKERS OF SUBCONTRACTORS

8 The Contractor *is / is not* a principal Contractor for work done in connection with the Contract, as defined in section 175B of the Workers Compensation Act 1987.
(Delete the words *in italics* that are not applicable.)

9 Where the Contractor is also a principal Contractor for work done in connection with the Contract, the Contractor has been given a written statement under section 175B of the Workers Compensation Act 1987 in the capacity of principal Contractor in connection with that work to the intent that all workers compensation insurance premiums payable by each subContractor in respect of that work done to the date of this statutory declaration have been paid, accompanied by a copy of any relevant certificate of currency in respect of that insurance.

10 I am aware that the Workers Compensation Act 1987 requires any written statement provided by subContractors and any related certificate of currency must be retained for at least 7 years after it was given and declare that the Contractor has accordingly made arrangements for the secure retention of the written statements.

EMPLOYER UNDER THE PAY-ROLL TAX ACT

11 The Contractor *is registered as / is not required to be registered as* an employer under the Pay-roll Tax Act 1971.
(Delete the words *in italics* that are not applicable.)

12 All pay-roll tax payable by the Contractor in respect of wages paid or payable to the relevant employees for work done in connection with the Contract to the date of this statutory declaration has been paid.

13 The Contractor *is / is not* a principal Contractor for work done in connection with the Contract, as defined in section 31G of the Pay-roll Tax Act 1971.
(Delete the words *in italics* that are not applicable.)

14 Where the Contractor is also a principal Contractor for work done in connection with the Contract, the Contractor has been given a written statement under section 31H of the Pay-roll Tax Act 1971 in the capacity of principal Contractor in connection with that work to the intent that all pay-roll tax payable by each subContractor in respect of the wages paid or payable to the relevant employees for that work done to the date of this statutory declaration has been paid.

15 I am aware that the Pay-roll Tax Act requires any written statement provided by subContractors must be retained for at least 5 years after it was given and declare that the Contractor has accordingly made arrangements for the secure retention of the written statements.

PAYMENTS TO SUBCONTRACTORS

16 The Contractor has paid every SubContractor, Supplier and Consultant all amounts payable to each of them by the Contractor as at the date of this statutory declaration with respect to engagement of each of them for the performance of work or the supply of materials for or in connection with the Contract.

17 The provisions of clause "SECURITY OF PAYMENT", if included in the Contract, have been complied with by the Contractor.

18 The Contractor has been informed by each SubContractor and Consultant to the Contractor (except for SubContracts and agreements not exceeding $25,000 at their commencement) by written statement in equivalent terms to this declaration (made no earlier than the date 14 days before the date of this declaration):

1. *that their subContracts with their subContractors, consultants and suppliers comply with the requirements of clause "SECURITY OF PAYMENT", if included in the Contract, as they apply to them; and*
2. that all of their employees, subContractors, consultants and suppliers, as at the date of the making of such a statement have been paid all remuneration and benefits due and payable to them by, and had accrued to their account all benefits to which they are entitled from, the SubContractor or Consultant of the Contractor or from any other of their subContractors or consultants (except for their subContracts and agreements not exceeding $25,000 at their commencement) in respect of any work for or in connection with the Contract.

19 I am not aware of anything to the contrary of any statutory declaration referred to in paragraph 18 of this declaration and on the basis of the statements provided, I believe the matters set out in paragraph 18 to be true.

20 And I make this solemn declaration, as to the matters aforesaid, according to the law in this behalf made, and subject to the punishment by law provided for any wilfully false statement in any such declaration.

Signature of Declarant	..... declared at
Place	.....
Date	on..... before me
Signature of legally authorised person before whom the declaration is made*	.....
Name and title of person before whom the declaration is made*	....

Notes:

1. In this declaration:
   1. the words "principal", " Contractor", "employee", "employees" and "relevant employees" have the meanings applicable under the relevant Acts;
   2. the word "subContractor" in paragraphs 5, 6, 9, 10, 14 and 15 has the meaning applicable under the relevant Act; and
   3. otherwise the words "Contractor", "SubContractor", "Supplier", "Consultant", "subContractor", "supplier" and "consultant" have the meanings given in or applicable under the Contract.

2. * the declaration must be made before one of the following persons:

   (a) where the declaration is sworn within the State of New South Wales:

(ii) a justice of the peace of the State of New South Wales;
(iii) a solicitor of the Supreme Court of New South Wales with a current practising certificate;
(iv) a notary public; or
(v) another prescribed person legally authorised to administer an oath under the Oaths Act (NSW); or

(b) where the declaration is sworn in a place outside the State of New South Wales:

(i) a notary public; or
(II) any person having authority to administer an oath in that place.

SCHEDULE 5 ENVIRONMENTAL MANAGEMENT PLAN

In accordance with the *Environmental Management* clause, the Contractor must develop and implement an acceptable site-specific Environmental Management Plan in the following form, incorporating additional objectives and actions applicable to the risks and opportunities associated with this contract.

The environmental risk management objectives	**The environmental risk management measures:**
1. CONSERVATION OF PLANTS & WILDLIFE	
Protection of trees, plants and animals	❑ Protect existing trees and plants at and around the Site from damage and do not remove flora without approval from the Principal ❑ Protect birds, fish and animals at and around the Site from harm and do not remove fauna from the Site without approval from the Principal ❑ Ensure that animals and plants are not brought onto the Site without the written agreement of the Principal ❑ Minimise the use of pesticides and herbicides and ensure minimal impact on the environment ❑ Use site roads or approved access routes for vehicular and equipment access ❑ Park all vehicles and equipment in designated or approved areas ❑ Use approved access routes for all pedestrian and goods movements to vehicles, equipment, facilities and construction sites ❑ The Contractor nominates the following additional measures: ..... ❑ The Contractor identifies the following person who will be responsible for managing the above measures: .....
2. CONSERVATION OF RESOURCES	
Manage Materials used under contract to minimise: 1. resource use 2. ozone depleting effects 3. detrimental effects on air, water, quality.	❑ Minimise the use of imported topsoil ❑ Reuse all topsoil on site ❑ Use only timber from sustainable managed sources ❑ Maximise the use of materials from a sustainable source, that are, and/or can be, recycled ❑ Use low energy usage construction, fittings and appliances (including heating/cooling and lighting) ❑ Use low potable water demand fittings and appliances (dual flush toilets, water conserving shower roses and taps) ❑ Ensure packaging is minimised and recycled ❑ Minimise the use of solvents, glues, paints and other materials which release odours or vapour ❑ The Contractor nominates the following additional measures: ..... ❑ The Contractor identifies the following person who will be responsible for managing the above measures: .....
3. POLLUTION CONTROL	
Vehicles and plant	❑ Do not use vehicles or plant producing excessive emissions ❑ Do not bring vehicles or plant with fuel or oil leaks to the Site ❑ Wash down vehicles only in areas approved by the Principal.

The environmental risk management objectives	The environmental risk management measures:
	❑ The Contractor nominates the following additional measures: ..... ❑ The Contractor identifies the following person who will be responsible for managing the above measures: .....
Stormwater is not polluted by cleaning activities and plants/grass are not adversely affected	❑ Use only water based, non-toxic paints ❑ Use only water to clean brushes and rollers ❑ The Contractor nominates the following additional measures: ..... ❑ The Contractor identifies the following person who will be responsible for managing the above measures: .....
Soil Erosion controlled	❑ Install the following sediment control devices prior to commencement of construction: ❑ The Contractor nominates the following additional measures: ..... ❑ The Contractor identifies the following person who will be responsible for managing the above measures: .....
Soil contamination is not disturbed or released to the environment	❑ Establish, in consultation with the Principal, if contaminated soil is present at the site prior to commencing work at the site ❑ The Contractor nominates the following additional measures: ..... ❑ The Contractor identifies the following person who will be responsible for managing the above measures: .....
Charging and/or disposal of refrigerants meet statutory requirements, eg. for licensing and disposal	❑ Ensure procedures are used to meet statutory obligations for the charging and disposal of refrigerants ❑ Use appropriately trained employees ❑ Document disposal and retain documentation ❑ The Contractor nominates the following additional measures: ..... ❑ The Contractor identifies the following person who will be responsible for managing the above measures: .....
Noise impact on neighbours, occupants or users of facility minimised	❑ Keep within EPA and Council noise limits ❑ Use equipment in good repair and condition ❑ Use noise suppression equipment (eg. silencers on compressors) ❑ Do not expose workers and visitors to excessive noise

The environmental risk management objectives	The environmental risk management measures:
	❑ The Contractor nominates the following additional measures: .....
	❑ The Contractor identifies the following person who will be responsible for managing the above measures: .....
Trade Waste Licence conditions applicable to the facility are not breached.	❑ Ensure procedures are in place to avoid breaches of the trade Waste Conditions (May apply to discharges from cooling water systems, condenser water systems, heating water systems, cooking facilities, engine discharges etc where water is treated with chemicals or where large sediment loads exist)
	❑ The Contractor nominates the following additional measures: .....
	❑ The Contractor identifies the following person who will be responsible for managing the above measures: .....
Air Pollution from dust and emissions minimised	❑ Minimise areas of exposed earth ❑ Use water sprays and/or other means to control dust ❑ Keep emissions within statutory or required limits
	❑ The Contractor nominates the following additional measures: .....
	❑ The Contractor identifies the following person who will be responsible for managing the above measures: .....
Disposal of waste, including - • Packaging materials • Replaced or redundant parts or materials. • Chemicals • Oils and greases from machinery and cooking processes • Paints and solvents including the cleaning of equipment, tools and brushes • Cleaning materials and rags • Other waste, in accordance with statutory requirements	❑ Ensure appropriate procedures are used for the disposal of all waste items. EITHER ❑ Provide valid disposal certificates for each applicable item. OR ❑ Provide company certification of appropriate disposal of the following:
	❑ The Contractor nominates the following additional measures: .....
	❑ The Contractor identifies the following person who will be responsible for managing the above measures: .....

The environmental risk management objectives	The environmental risk management measures:
Emergencies Incidents and spills are contained, and damage to the environment is minimised and rectified with appropriate and approved emergency response procedures	❑ Ensure emergency procedures are used to manage all reasonably foreseeable harm, including spills and other environmental emergencies ❑ Agree with the Principal to procedures for handling oil and chemicals before placing on the Site ❑ Document key contacts ❑ The Contractor nominates the following additional measures: ..... ❑ The Contractor identifies the following person who will be responsible for managing the above measures: .....
Compliance Audit Compliance with Principal environmental requirements and, where breaches are detected, rectification of defects within the time period set in the audit process	❑ Inspect the Site daily to ensure the appropriate environmental controls are in place and are operating effectively, and to ensure all environmental management requirements are being met ❑ Cooperate with environmental audits by others ❑ Rectify any environmental breaches identified within the time frame specified in an audit or by the Principal ❑ The Contractor nominates the following additional measures: ..... ❑ The Contractor identifies the following person who will be responsible for managing the above measures: .....
4. RECORDS AND REPORTING	
Records Sufficient documentation to demonstrate: • Approved management plans • Training records • Valid disposal certificates and/or company certification of appropriate disposal as applicable • Correspondence with regulators including evidence that the cause of non-compliances has been fixed	❑ Update the contract specific EMP ❑ Report on the implementation of the contract specific EMP ❑ Submit Incident reports to the Principal and to regulators where required ❑ Submit waste disposal certificates or certification of appropriate disposal to the Principal where applicable ❑ Keep training records for inspection ❑ The Contractor nominates the following additional measures: ..... ❑ The Contractor identifies the following person who will be responsible for managing the above measures: .....
Incident Reporting All environmental incidents are immediately reported to Principal	❑ Immediately report all environmental incidents to the Principal ❑ The Contractor nominates the following additional measures: ..... ❑ The Contractor identifies the following person who will be responsible for managing the above measures: .....

Contents

1. Introduction 1

2. Background 1

3. Objectives 1

Competitive pricing 1
High quality of Equipment and Installations 1
Genuine Environmental Outcomes 2

4. Scope 2

5. Pricing 2

Relationship of pricing to quotations 2

6. Technical Specification 2

7. NSW Department of Education (DET) 2

8. Important Contract Characteristics 3

Incorporated Works Contract 3
Completion Time 3

9. Implementation 3

10. Regions 3

11. Engagement 4

Request for Quotation (RFQ) 4
Site Inspection 4
Quotation 4
Purchase Order 5
Installation 5
Handover 5

12. Renewable Energy Certificates (RECs) 5

13. DET Requirement 5

14. Warranties 6

15. Maintenance 6

16. Applications for funding 6

17. List of Annexures 6

Statement of Requirements

1. Introduction

Through this request for tender, the State Contracts Control Board is intending to implement a procurement arrangement for solar power systems for the NSW Government. That arrangement will be a contract with a duration of three years with two options for extension of up to 12 months in duration. The intention of the arrangement is to ensure:

- economy through consolidation of volume
- quality of equipment, materials, design and workmanship by requiring conformance to well considered technical specifications and selection of contractors of high competence and experience.

Due to the impact of federal government funding initiatives that are designed to help Australian schools tackle climate change, the requirements of NSW Department of Educations and Training (DET) are very much to the fore in establishing the proposed arrangement. However the arrangement will also need to serve other NSW Government agencies.

As well, local governments, non for profit organisations and educational institutions other than those under DET (including private schools, colleges and universities) may access the contract.

2. Background

Over the next few years, it is expected that the NSW Government will be procuring Solar Power Systems. A significant driver of this procurement will be the Australian Governments National Solar Schools Program (NSS).

The NSS program commenced from July 2008, and will run until 30 June 2015. The programs funding is available for solar power systems and related items, solar hot water systems, solar or heat pump hot water systems, other renewable energy generation, energy efficient items, rainwater tanks, and safety items.

The NSS offers grants of up to $50,000 to each school, and potentially two grants of $50,000 for schools with multiple campuses. Contingent on accessing the full $50,000 is the inclusion, as a part of the project to be funded, of a solar power system of at least 2KW in capacity. Otherwise, there is only $30,000 available.

3. Objectives

Competitive pricing

Through a competitive tender process, with the significant volume of business at stake, and guarantee of business to the winning tenderers. Competitive pricing will enable schools to make the best use of the funding available.

High quality of Equipment and Installations

Conformance to the applicable Australian standards will be required. This document includes specifications that cover the equipment, the installations and their maintenance in line with best practise in the photovoltaic industry.

Genuine Environmental Outcomes

Through competitive pricing and quality of equipment and installations, replacement of fossil fuel generated power will be optimised. For schools that opt for a solar power system, lower pricing than would otherwise be available will enable more funds to be available for the other energy and water saving options under the National Solar Schools program.

4. Scope

Tenders will not be considered unless they offer a complete end to end solution, with all of the following elements included.

1. **Solar Panels -**Four types of solar panels are being tendered for use in the systems being installed. They include rigid types, being multi-crystalline, mono-crystalline and amorphous. As well, flexible amorphous types will be tendered.

2. **Associated equipment -** Including inverters, cabling, data loggers, meters, mounting hardware and any other equipment required along with the panels to make a complete operational solar power systems.

3. **Installation** - Site inspection, quotation, required labour, testing and commissioning, reports, associated works and hardware.

4. **Training** – As required for operation and maintenance.

5. **Warranties**

6. **Complete systems –** systems up to 5KW in capacity to be tendered

7. **Maintenance –** is to be offered as an option

5. Pricing

Relationship of pricing to quotations

The Contractor will be required to honour the system scenario prices offered for a particular region in Part C of this RFT, which is one price for the entire region no matter where the installation is required within that region. Variations may be allowed where more cable or other material is required due to site conditions. However, variations will not be allowed for more hours of labour, travel, accommodation, transport or delivery.

6. Technical Specification

The Technical Specification has been prepared by the Government Architects Branch of NSW Department of Commerce, and is attached to this document.

All tenders must comply with the technical specification detailed in Annexure A to Part F.

7. NSW Department of Education (DET)

The NSW Department of Education will be the prime Customer for this arrangement.

The NSW Department of Education and Training (DET) delivers high quality, internationally competitive public education and training from early childhood (pre-school), through to the

compulsory years of schooling (Kindergarten to Year 10), and senior secondary education leading to the award of the NSW Higher School Certificate (in Years 11 and 12).

It strongly promotes lifelong learning, and aims to provide students with a smooth transition from school to work or further study, and from post-compulsory education and training to work or further study.

The Department is the largest single organisation, public or private, in Australia. With a recurrent budget of $11.8 billion, the Department is responsible for around one quarter of the State's total budget.

Around 741,000 students are taught by over 50,000 full time teachers in more than 2,200 NSW Government schools - including pre-schools, primary schools, central schools, high schools, colleges and specialist schools.

8. Important Contract Characteristics

Incorporated Works Contract

As installation of systems is by nature akin to a building works contract, once a quotation is accepted by a Customer, a Customer contract incorporating terms and conditions of a works contract nature will be automatically put in place. The parameters of the Works contract are set by the Contractor's quotation document.

The Works contract will cover such issue as completion time, OH&S on site, care of people and property, and all such issues as typically covered by Works contracts.

Completion Time

There will be a maximum period from receipt of an order to completion and commissioning of the installation of 10 weeks.

9. Implementation

The following is the proposed implementation timeline, and the periods stated are only approximate. This is provided only to give a guide to tender participants. This timeline may change due to unforseen circumstances and issues arising during the implementation. The SCCB is not bound by the periods suggested.

Tender period – 5 weeks
Evaluation and approval by the board – 5 weeks
Final negotiation, signup and commencement of contract - 4 weeks

As with any project, these timelines may slip. It is the intention of the board to have a contract in place well before the end of February 2009.

10. Regions

Tenderers will be able to offer for one, several or all of the regions below. These regions are the same as the regions used by DET. For the purposes of deciding which region a site belongs, treat the site as being in the same region as the nearest institution administered by DET. The regions and the institutions are given in the DET Directory, copy of which is included in the attachments to this statement of requirements.

Region 1 – Greater Sydney Metropolitan (Sydney, Northern Sydney, Western Sydney, South Western Sydney, Hunter/Central Coast, Blue Mountains, Illawarra
Region 2 – North Coast

Region 3 – New England
Region 4 – Riverina
Region 5 – Western NSW
Region 6 – South East

11. Engagement

The sequence of engagement between the Contractor and Customer is as follows

1) Request for quotation (RFQ)
2) Site inspection
3) Quotation
4) Purchase Order
5) Installation
6) Handover

Request for Quotation (RFQ)

Issued to Contractor from Customer. The request for quotation should state the size and type of installation required, however the requirements may vary once the Contractor is engaged.

Site Inspection

Contractors representative to visit the site, confirm requirements with the Customer, investigate options for location, and take a full appreciation of site conditions. All issues required to finalise a quotation should be canvassed. There will be no basis for claims of site conditions requiring variation if the Contractor had full opportunity to make a full inspection. (refer Annexure A to this section)

The site inspection must be completed within four weeks of the request for quote being issued.

Quotation

When a contracted supplier is contacted by a Customer, and the Customer indicates that installation will be required, the supplier must arrange a site visit within one month. Once the site visit is carried out, within one week a quotation is to be provided.

All purchase orders received under the contract must be preceded by a formal quotation from the supplier.

Quotations are to include the following elements

- Drawings of the intended installation
- An itemised manifesto of the parts and materials, with prices
- Hours of labour
- Number of personnel
- Time for completion
- Cost of RECs
- Total Price

The quotation may offer alternatives, as long as they are within the contract specifications and pricing. The quotation must show whether RECs are retained by the Customer or assigned to the Contractor, and whether maintenance is included, and the price impact of those decisions.

DET has indicated it will retain the REC's but require a price for/without REC's

The quotation may not include any conditions that are not inline with the contract.

The site quotation must be completed within six weeks of the request for quote being issued.

Purchase Order

Once a quotation is submitted that the Customer is satisfied with, a purchase order may be issued which will be an acceptance of the quotation. The purchase order should state the desired completion time and the period over which the work may be done. If no completion time is stated then the work must be completed within the time set by the contract.

Installation

Must be completed within 10 weeks of the purchase order being issued, unless the purchase order states otherwise. Once installation has commenced the Contractor has two weeks to complete the installation and commission the system.

The contracted supplier must complete the project within the contracted period. Any request to complete the project at a time beyond the contracted period must be copied to the NSW Procurement vendor manager, whether it arises from the Customer or the Contractor. It is the responsibility of the Contractor to inform the NSW Procurement Vendor Manager in any event.

Handover

Once the system has been commissioned, the Customer must be provided with an installation report, with a form for them to sign a copy to indicate their acceptance of the handover of the system, with a copy to be retained by the Contractor.

12. Renewable Energy Certificates (RECs)

Customers will have the retain RECs or assign them to the Contractor. Tenderers are asked to provide alternative prices for each system, one for when RECs are retained by the Customer, and a price for when the RECs are assigned to the Contractor.

DET has indicated it will retain the REC's and not assign them to the Contractor but require a price for/without REC's All RECs are to be forwarded to DET's Regional Asset Management Unit.

13. DET Requirement

The DET has a strong interest in ensuring that the solar power systems and the installations are of a high quality, robust as the technology allows and long lasting. As well, that the installations must not cause damage to school infrastructure, either in the short term or over time due to such issues as moisture ingress through penetrations made in roofs.

DET have indicted that they are likely to order systems which are either 2KW or 3KW in capacity.

The Contractor will be required to configure and quote systems that are fully claimable through the National Solar Schools program. If elements are requested that may not be claimed or any other requirements are made that may prejudice against the full funding being provided, the Contractor will be required to inform the school of those difficulties.

14. Warranties

- Photovoltaic panels will have a full replacement warranty of 20 Years
- Inverters will have full replacement warranty of 10 years
- Mounting Structure – warranty of 20 years (structural)
- Installation – Roof penetrations guaranteed against ingress of moisture for the life of the installation.

Further details of warranty requirements are stated in the technical specifications at Annexure A.

15. Maintenance

Customers may choose for maintenance to be provided by the Contractor as specified in the Technical Specification, or to arrange maintenance themselves.

Tenderers are asked to price maintenance separately, as an option for the Customer.

16. Applications for funding

To assist any school in gaining the funding through the NSS the Contractor will provide to the school on completion of the project

- An installation report (as described in the technical specification) signed by the Contractor
- An estimate of the energy savings achieved

17. List of Annexures

A) **Technical Specification**

B) **2008 DET Directory**
The directory is an annual publication which provides information about the NSW Department of Education and Training. The information in the directory is up-to-date as at March 2008. It includes a manifesto of all schools under DET, DET offices and DET senior management, with contact details.

Solar Power Systems

Photovoltaic Solar Power Generator – Technical Specification 3
1 general 3
1.1 AIMS 3
1.2 Scope of Work 3
1.3 Standards 4
1.4 cross references 4
1.5 NATSPEC REFERENCE SPECIFICATION 4
2 System Provider Requirements 5
2.1 Accreditation 5
2.2 Licences 5
2.3 Occupational Health and Safety (OH&S) 5
2.4 Site Inspection 6
3 Submissions 7
3.1 Work Methodology 7
3.2 installation report 7
4 PV system Requirements 7
4.1 General system requirements 7
4.2 Maintenance Access 7
4.3 PV Module Requirements 8
4.4 Photovoltaic Module Array Arrangement 8
4.5 Mounting FRAME 9
4.6 Inverter Requirements 10
4.7 DATa-logger requirements 11
4.8 LIGHTNING PROTECTION 12
4.9 Moulded case and miniature circuit breakers 12
4.10 Power cables 13
5 Electrical Installation Requirements 13
5.1 Australian Standards 13
5.2 Inverter Station Location 14
5.3 DC Cabling Installation 14
5.4 AC Cabling Installation 14
5.5 Wiring 15
5.6 Conduits 15
5.7 Colour Code 15
5.8 Marking and labelling 15
5.9 Single-line diagrams 15
5.10 Electricity distributor notification 15
6 site Requirements 16
6.1 Work Method Statement and Safety Procedure 16
6.2 Protection of children and other vulnerable people**Error! Bookmark not defined.**
6.3 Other Requirements 16
7 Metering Requirements 16
8 Testing and Commissioning 17
8.1 Tests 17
9 Completion 17
9.1 on-site training 17
9.2 WARRANTEES OR GUARANTEES 17
9.3 Other requirements 17
10 Maintenance 17
11 Other Requirements 19
11.1 Planning approval 19

11.2 Inspection and Publication of PV System Information.....20
11.3 Working hours and working days.....20
11.4 Removal of Trees 20

Photovoltaic Solar Power Generator – Technical Specification

1 GENERAL

1.1 AIMS

Provide photovoltaic generating system(s) as documented for NSW DET school premises.

1.2 SCOPE OF WORK

The works in this contract shall comprise the provision of all materials, labour, transport, tools, plant, applications, payment of fees and everything else necessary for the design, supply, installation, commission and maintenance of photovoltaic (PV) grid-connect rooftop system(s) as documented and shall include:

- Mandatory site inspection of proposed installation site
- Photovoltaic modules
- Grid-connect inverter(s)
- Mounting frame for rooftop installation
- DC and AC cabling from the photovoltaic array to the DC and AC switchboards and inverters, and to the nearest existing electrical distribution board
- Electrical metering for all photovoltaic system ≥ 5 kilowatts peak nominal capacity as per Electricity Distributor requirements for billing purposes
- Data-logger for monitoring PV system performance
- Web-service for publishing PV system performance
- Testing and commissioning
- Inspections of the PV system by the local Electricity Distributor
- Training of local staff in the basic operation, maintenance, and trouble-shooting of the PV system
- Installation report and photographs of completed projects
- Operating warranty
- Periodic maintenance for a 12 year period to be offered as an option
- Sundry minor works as specified herein
- All supports, brackets, drilling, penetrations, fire stops, water proofing and other building works associated with the above

The typical electrical configuration of the expected grid-connected photovoltaic system is described in Sketch-E01 attached.

The tenderer shall advise any ambiguities in the document at the time of tender for the works specified. Claims for extra costs based on lack of knowledge of the documents will not be accepted after submission of the tender.

Provide all apparatus, appliances, materials, labour and services not specifically mentioned, that are necessary to form a complete fully operational system in all respects and without any additional cost. Price variation or extensions of time will not be allowed on the basis of lack of knowledge or familiarisation with other documentation for the project.

1.3 STANDARDS

In carrying out the installation of grid-connected solar power systems, the Contractor will be required to undertake the work in accordance with the following most recent Australian Standards:

AS 5033	Installation of Photovoltaic Arrays
AS 3000	Electrical Wiring Rules
AS 1768	Lightning Protection
AS 1170.2	Wind Loads
AS 4777	Grid Connections of Energy Systems via Inverters
AS 2053	Conduits and Fittings for Electrical Installations
AS 4509	Stand-Alone Power Systems

Building Code of Australia

National Building and Services Reference Specification 2008 Edition

Electricity Distributor Service and Installation Rules

New South Wales Service and Installation Rules

Other appropriate Australian Standards

1.4 CROSS REFERENCES

General

Electrical services design and installation is to comply with the following sections from the NATSPEC ELECTRICAL SERVICES specification:

- General requirements
- General requirements (Electrical)
- Fire-stopping
- Cable support and duct systems
- Low voltage power systems
- Switchboards – proprietary
- Switchboards – custom-built
- Switchboard components
- Lightning protection
- Telecommunications cabling
- Power Generation - Photovoltaic

1.5 NATSPEC REFERENCE SPECIFICATION

This project specification and the associated drawings have been prepared as a two-part specification i.e.

- NATSPEC ELECTRICAL SERVICES
- this specification containing specific requirements of the contract.

The NATSPEC ELECTRICAL SERVICES specification is referred to without reference to edition. Use the edition of the NATSPEC ELECTRICAL SERVICES specification that is

current at the date of tenders closing. For additional information including current edition of NATSPEC ELECTRICAL SERVICES refer to www.natspec.com.au. NATSPEC is published by and is obtainable from Construction Information Systems Pty Ltd. A copy of NATSPEC has been provided as an attachment.

The NATSPEC REFERENCE specification is being referred by implicit selection. NATSPEC REFERENCE specification provisions apply unless the project specific documents say they do not. This is being done implicitly, by context. For example, if the project clearly (e.g. from the drawings and specification) has no steel conduit then the clauses dealing with metallic conduit in the *Cable support and duct systems* section do not apply. Statements in the project specification do not exclude such items explicitly.

At a finer level of detail, if the NATSPEC REFERENCE specification contains a default provision for an applicable element, but the project specification describes a different provision, then the provision in the project specification will override that in the NATSPEC REFERENCE specification.

Site Copy

Keep a hard copy of NATSPEC ELECTRICAL SERVICES on site during installation.

2 CONTRACTOR REQUIREMENTS

2.1 ACCREDITATION

The Contractor must be accredited by the Clean Energy Council of Australia, formerly the Australian Business Council for Sustainable Energy (BCSE) in order to carry out PV design and installation works.

The designer of each grid-connected photovoltaic power system must have full BCSE accreditation – provisional accreditation will not be accepted.

At least one person carrying out installation work at each work site must have full BSCE installers accreditation. No work is permitted to be carried out at any time on-site unless a fully BCSE accredited installer is physically present within the work-site.

For further information please see the Australian Business Council for Sustainable Energy Website at: http://cleanenergycouncil.org.au/

2.2 LICENCES AND TRADE QUALIFICATIONS

All work shall be carried out by persons or tradespersons fully qualified and trained for the particular trade work or service required.

A licenced electrician must carry out all Low Voltage electrical work (i.e. exceeding Extra-Low Voltage of 50V a.c. or 120V ripple free d.c.) and all electrical work associated with connecting the photovoltaic system into the building's power system and electricity grid.

Apprentices, trade assistance and labourers are to be under the supervision of a qualified tradesperson, where appropriate.

2.3 OCCUPATIONAL HEALTH AND SAFETY (OH&S)

In carrying out the installation of grid-connected solar power systems, the Contractor will be required to undertake the work in accordance with the BCSE OH&S requirements and the NSW OH&S requirements including, but not limited to, the following:

- *Occupational Health and Safety Act (2000) No 40* – Clause 8: Duties of employers

- *Occupational Health and Safety Regulation 2001* – Division 6: Working at heights (all sections)
- *Occupational Health and Safety Regulation 2001*- Division 8: Electricity (all sections)
- Codes of Practice, approved and issued pursuant to the above Act and or Regulations made under the Act, and
- the NSW Government *Occupational Health and Safety Management Systems Guidelines 4th Edition* (OHSM Guidelines), and

The Contractor must ensure that the Contractor's Sub-Contractors comply with the OH&S requirements listed in this clause in the performance of any contract awarded.

A summary of relevant Occupational Health and Safety Laws and Regulations is available from WorkCover NSW.

2.4 SITE INSPECTION

The Contractor shall undertake a site inspection of the proposed installation site prior to providing a quotation for the works. The Contractor will be responsible for all site conditions when undertaking the works. Site inspection shall include, but is not limited to:

- Assessing the suitability of building roof for system installation by taking into consideration:
  - Orientation and pitch of the roof
  - Whether there is sufficient space on the roof to install the solar panels
  - Whether the roof is in good condition or likely to be replaced in the next 10 years
  - Suitability of roof structure for solar PV system wind loading
  - Trafficability of the roof such that no damage is likely to occur to the school infrastructure during installation and maintenance
- Nearby obstructions or trees that may shade the solar panels during the day
- Whether there is a suitable location for the inverter station
- Suitability of nearest electrical distribution board for AC grid-connection by taking into consideration:
  - Age and condition of the nearest electrical distribution board
  - Whether the electrical distribution board is appropriately rated to include the maximum load of the proposed solar PV system
  - Whether the electrical distribution board's main switch is appropriately rated to include the maximum load of the proposed solar PV system
  - Whether the electrical submains are appropriately rated to include the maximum load of the proposed solar PV system
  - Whether the are sufficient spare poles available on the electrical distribution board for installing the required AC switchgear
- Note the type of existing circuit breaker protection located on the nearest electrical distribution board. New AC switchgear is to match existing
- Whether the building contains any asbestos product by checking the asbestos registry

3 SUBMISSIONS

3.1 WORK METHODOLOGY

Prior to commencing installation at each work site provide a work methodology to the relevant School Principal that includes, but is not limited to:

- Site specific safe work method statement for compliance with NSW OH&S requirements
- Methods of waterproofing any necessary roof and/or wall penetrations
- Work method practices to be carried out to ensure school infrastructure will not be damaged during installation (i.e. methods for preventing damage to existing roof during installation)

3.2 INSTALLATION REPORT

For each grid-connected photovoltaic power system submit to the relevant School Principal a completed National Solar Schools Program solar power system installation report (as attached) no later than 1 calendar week after system installation practical completion. The installation report shall also include, as additional to the National Solar Schools Program requirements:

- Technical description, specifications and manuals for each system component (i.e. solar panels, inverter(s), data-logger, mounting frame and balance of system components).
- Calculations and assumptions for all selections and systems including predicted annual energy generation calculations and voltage drop calculations.
- Physical layout of photovoltaic array showing location of photovoltaic modules, mounting equipment, inverter station and cable runs.
- Single line schematic showing the configuration of photovoltaic strings and inverter and the interconnection with the building electrical system.
- Product warranties such that the relevant School Principal can make a warranty claim as per Clause 9.2.
- Trouble shooting guide for common solar array faults (i.e. start-up and shut-down procedure, inverter LED signals and descriptions, grid failure, inverter failure and insulation failure).
- Testing records and certificates as per Clause 8.

4 PV SYSTEM REQUIREMENTS

4.1 GENERAL SYSTEM REQUIREMENTS

The photovoltaic array must comprise sufficient number of photovoltaic modules whose individual nominal rating under Standard Test Conditions (STC) results in a minimum kilowatt peak total array nominal rated capacity nominated in the contract agreement.

4.2 MAINTENANCE ACCESS

The arrangement of all the components of the photovoltaic system will be arranged so that the photovoltaic modules, inverters, data loggers, and any other component, is readily accessible for maintenance and replacement when required.

4.3 PV MODULE REQUIREMENTS

Selection of Modules

No particular brand or model of photovoltaic modules is specified. The Contractor will nominate the brand and model of photovoltaic module proposed for this contract.

Australian Standards

The proposed photovoltaic modules must comply with AS/NZS 5033:2005.

Certification

Crystalline photovoltaic modules must be certified with IEC-61215. Amorphous photovoltaic modules must be certified with IEC-61646. Evidence of this must be demonstrated by submitting a copy of the testing certificate from an IEC certification body at the time of tender.

Equipment Class

PV modules must be Class II or better.

Encapsulation

PV modules must be encapsulated in toughened glass.

Protection Rating

PV modules and PV array junction boxes exposed to the environment shall be at least IP56 compliant in accordance with AS 60529 and shall be UV resistant.

Temperature Coefficient

Maximum allowable temperature coefficient of maximum power is -0.5% / °C.

Operating Temperature

Operating module temperature -20°C to +80°C.

Mechanical Protection

Hailstone impact testing: Required.
Maximum allowable mechanical load > 450 kg/m^2

Warranty

Crystalline photovoltaic modules must meet the following minimum warranted power percentage:

20 years – at 80% power output

Amorphous photovoltaic modules must provide a minimum warranty of 20 years.

The Contractor is responsible for ensuring the photovoltaic modules are installed as per manufacturer's installation, operation or maintenance instructions.

Other requirements

The photovoltaic modules supplied must be chosen with price-per-performance in mind i.e. dollars per watt peak should be considered. It is recommended that photovoltaic modules rated at 80 watts nominal peak capacity or greater should be nominated for the system.

4.4 PHOTOVOLTAIC MODULE ARRAY ARRANGEMENT

Notwithstanding the total photovoltaic array power capability as required under this specification, the number of individual photovoltaic modules must be such, and the array so arranged, that the physical arrangement of the array is grouped together symmetrically or geometrically ordered.

The photovoltaic array must also be arranged such that photovoltaic modules will not be shaded to any extent by buildings, trees or the photovoltaic modules themselves between the hours of 10:00am and 3:00pm on all summer and winter months.

4.5 MOUNTING FRAME

General

The PV array shall be either:

- Proprietary fixed frame surface mounted flush-to-roof type system; or
- Proprietary raked on mounting frames to maximise solar insolation.

The mounting system shall be mechanically fixed to the building structure. Custom made mounting systems will not be accepted.

Location

The location of the PV array should be designed to maximise solar generation so that, as much as possible, the photovoltaic modules point with a tilt angle of ± 20 degrees to the latitude of the installation and orientated ± 45 degrees to true north. Locate the PV array such that there is minimal risk of vandalism.

Structural Suitability

The array mounting structure shall generally be suitable for Region B (intermediate) Terrain Category 2 maximum wind speed regions as outlined in AS1170. In areas which are deemed to be prone to cyclones, the array mounting structure must be suitable for Region C (cyclonic) Terrain Category 2 maximum wind speeds.

The mounting structure must comply with the requirements of AS1170.2: Structural design actions – Wind actions. The Contractor must demonstrate compliance with AS1170.2 by submitting wind load calculations for the typical project scenarios outlined in the tender schedules and certified by a structural engineer at the time of tender.

Mounting

Typical NSW school building roof structures and profiles are attached for information only. Generally provide a flush-to-roof type mounting frame with 60-100mm airgap between the rear of the photovoltaic module and roof material for all pitched roofs.

Provide raked mounting frames to tilt the photovoltaic modules to the angle of latitude ± 20 degrees for flat roofs with less than 5 degree pitch or when an orientation of ± 45 degrees to true north cannot be achieved using a flush-to-roof type mounting system.

Any bolts, washers, screws, nails or metal objects in contact with the mounting frame must be rust-proof or not cause a galvanic reaction.

The PV mounting frame and fixings to PV modules shall be fitted with either pin-torque, anti-vandal screws or tri-lobial, tamper-resistant end-cap screws.

Installation

The mounting system shall be fixed through the roof into purlins or rafters using existing roofing screw positions wherever possible. All penetrations must be resealed and waterproofed as required.

All roof and wall penetrations must be conducted such that there is a 20 year barrier to the ingress of water or moisture. The Contractor shall provide a 20 year guarantee for waterproofing all roof and wall penetrations and is liable for any damage caused by water ingress through roof and wall penetrations for the first 20 years of operation.

Wherever possible the rails for module mounting should run vertically up the slope of the roof, perpendicular to the gutter, along the common rafters up to the apex of the building. Locating mounting frame railing horizontally, parallel to the gutter, along the purlins should be avoided.

Warranty

The mounting system must have a minimum warranty of 20 years in meeting the requirements of AS1170.2 for normal operating conditions. The Contractor must supply a warranty to which the School Principal can make a warranty claim.

4.6 INVERTER REQUIREMENTS

Selection of Inverter

The selection of the inverter brand and model is not specified, but must be fully compliant with Australian Standards and all other relevant Authorities' requirements.

The Contractor will nominate the brand and model of inverter(s) proposed for this project. The inverter system must be suitable for use with the specified photovoltaic system.

Australian Standards

The inverter(s) supplied must be certified with AS4777. Evidence of this must be demonstrated by submitting a copy of the Certificate of Suitability from the NSW Office of Fair Trading or equivalent at the time of tender.

Technical Requirements

The total capacity of the inverter(s) must be such that it is rated sufficiently for the total capacity of the photovoltaic array. However, the rated capacity of the inverter(s) must be as small as possible without sacrificing generated energy.

The inverter(s) must be also be well ventilated to prevent over-heating and must be capable of autonomously synchronizing with the existing grid voltage.

Waveform: True sine wave.

Waveform quality: to AS 4777.

Voltage regulation: ± 8%.

Harmonic distortion of output current:< 4%.

Frequency regulation: ± 1%.

Efficiency: ≥ 90% at 10% load.

Protection: Overload, short circuit and transient required.

Automatic no-load shutdown: required.

Display:

– Output power.
– Grid stability.

Load Balancing

A three phase system configuration will be required for all grid-connect photovoltaic power systems ≥ 6 kilowatts peak nominal rated capacity. The system must be balanced over three (3) phases within 5% and to the approval of the Electricity Distributor's requirements.

Warranty

The inverter must have a minimum warranty of 10 years. The Contractor must supply a warranty to which The School Principal can make a warranty claim to the inverter manufacturer.

4.7 DATA-LOGGER REQUIREMENTS

A data-logger must be supplied, installed and connected to the solar PV power system's inverter(s). The data-logger must be fully compatible with the nominated inverter(s).

Locate the data-logger directly adjacent to the inverter station.

Technical Requirements

The data-logger must be capable of recording the following information:

- Energy Total (kWh)
- A calculation of CO2 saved (kg)
- Power now (W, kW)
- Energy today (Wh, kW)
- Time period / date for energy generated
- Instantaneous voltage of PV system (V)
- Instantaneous current of PV system (A)

The data-logger(s) must be capable of monitoring multiple inverters at once and must be able to record individual inverter performance and operation parameters of the PV, such as DC voltage and current, and AC voltage, current and frequency.

The data-logger and interface must have the following capabilities:

Storage data capacity ≥ 1 gigabyte

Save cycles ≤ 30 minutes

Connection interfaces: USB-interface, USB socket, 8-pin data cable (RS 485), network plug (RJ 45-sockets) and RS232.

The data-logger must come complete with PC software with an open source protocol for automatically transferring the PV system data to a NSW Department of Education and Training database or website.

Web Service

Provide a free proprietary web service and internet platform for Photovoltaic plant monitoring and visualisation.

The web service must provide the following functions:

- System information via e-mail (energy yield, maximum output, CO_2 reduction, system fault messages)
- Presentation of system data in diagrams and tables
- Ability to publish web data on other websites, including the NSW Department of Education and Training website
- Ability to customise individual web pages through HTML and insert own images

The service provider shall register the web service product and test the system for functionality. Data shall be broadcasted on the web service daily.

Make all necessary applications and pay any licence fees in relation to registering the photovoltaic solar power system to the web service.

The Contractor shall provide training to the School Principal and nominated staff in the use and functionality of the web service product and shall supply all information necessary to maintain the system upon practical completion, including necessary licences, usernames and passwords.

Installation

General: To manufacturers recommendations.

Interface the data-logger(s) to the new inverter station and all existing PV system inverters located on the school site if compatible. Connect the data-logger(s) to the school's structured cabling computer network. Liaise with the school network administrator to modify the existing fire-wall settings. Test for functionality.

4.8 LIGHTNING PROTECTION

Bond the metal portions of photovoltaic array to the existing lightning protection system if available as per AS1768 and AS3000.

4.9 MOULDED CASE AND MINIATURE CIRCUIT BREAKERS

Moulded case breakers: To AS 60947.1, AS 2184 and AS 60947.2.

Miniature circuit breakers: To AS/NZS 60898.1 or AS 3111.

Operation: Independent manual operation including positive ON/OFF indicator.

Trip type:

- Moulded case breakers: Adjustable thermal, fixed magnetic.
- Miniature circuit breakers: Fixed thermal, fixed magnetic.

Current limiting:

- Moulded case breakers: Required.

Isolation facility: Required.

Mounting: Mount circuit breakers so that the ON/OFF and current rating indications are clearly visible with covers or escutcheons in position. Align operating toggles of each circuit breaker in the same plane.

Utilisation category: Moulded case breakers:

- Final subcircuits category: Category A.
- Mains and submains: Category B.

Trip units: Connect interchangeable and integrally fused trip units so that trip units are not live when circuit breaker contacts are open.

4.10 POWER CABLES

Standard

PVC and XLPE cables: To AS/NZS 5000.1.

Cable

General: Select multi-stranded copper cable generally, except for mineral insulated metal sheathed (MIMS).

Minimum size: 2.5 mm^2.

Voltage drop: Select final subcircuit cables within the voltage drop parameters dictated by the route length and load.

Fault loop impedance: Select final subcircuit cables selected to satisfy the requirements for automatic disconnection under short circuit and earth fault/touch voltage conditions.

Distribution cables: To AS/NZS 4961.

Conductor colours

General: For fixed wiring, provide coloured conductor insulation. If this is not practicable, slide at least 150 mm of close fitting coloured sleeving on to each conductor at the termination points.

Active conductors in single phase circuits: Red.

Active conductors in polyphase circuits:

- A phase: Red.
- B phase: White.
- C phase: Blue.

DC Cabling Sizing

DC cables must be sized to maximise system performance. The voltage drop of the photovoltaic system between the photovoltaic array and inverter must be lower than 3% of the total PV array D.C. voltage.

AC Cabling Sizing

The Contractor must allow the shortest possible A.C. cable runs with a secure cable installation and while providing cable access without obstructing any walkways, passages or windows, and must have the capacity to handle the PV system AC output.

The A.C. cable must be sized such that the voltage drop between the inverter station and the distribution board is less than 2% of the total PV inverter A.C. voltage.

5 ELECTRICAL INSTALLATION REQUIREMENTS

5.1 AUSTRALIAN STANDARDS

In addition to the standards listed elsewhere, grid protection devices must be installed in accordance with AS4777.

The photovoltaic system must also be installed in accordance with AS/NZS 5033:2005.

The installation must also comply with AS/NZS 3000.

5.2 INVERTER STATION LOCATION

The inverter station shall be located such that:

- There is minimal exposure to excessive heat, dust and weather elements such as rain
- The inverter station is located indoors unless there are exceptional circumstances
- There is provision for adequate ventilation
- The inverter station is safeguarded from theft and vandalism and installed in a lockable location with restricted public access
- There is easy access for periodic maintenance and inspection from maintenance staff
- There are minimal DC cable losses by locating the inverter station as close as possible to the PV array and DC switchgear
- There are minimal AC cable losses by locating the inverter station as close as possible to the nearest electrical distribution board

5.3 DC CABLING INSTALLATION

The DC cabling from the array to the DC combiner box / DC switchboard will be laid out together into a single run across the roof, and within a Colorbond box system with clip down cover or UV protective conduit.

The DC cables shall not be positioned in locations of water drainage or in locations that are likely to prevent the egress of rainwater.

DC cables shall not dangle or hang from PV modules and shall be firmly tied against the rear of the PV module.

Provide a D.C. isolator directly adjacent to the PV array as per AS3000. If the D.C. isolator is exposed to the environment, provide an IP56 rated D.C. isolator.

Wherever possible the DC conduit and cable will enter the building through the end wall gable rather than through the roof. Waterproof and seal all penetrations such that they provide a 20 year barrier against the ingress of water or moisture. The Contractor shall provide a 20 year guarantee for waterproofing all roof and wall penetrations and is liable for any damage caused by water ingress through roof and wall penetrations for the first 20 years of operation

The Contractor must allow for the shortest possible DC cable run with facilitated cable installation and cable access without obstructing any walkways, passages or windows.

5.4 AC CABLING INSTALLATION

Connect the A.C. cable from the inverter station to the nearest existing electrical Distribution Board. Provide new circuit breaker protection to AS3000 within the existing electrical Distribution Board and ensure the nominated switchboard and new circuit breaker(s) are adequately rated to safely withstand the additional load of the nominated PV system. The new circuit breakers(s) shall be of similar make and model to the existing circuit breakers located within the electrical existing electrical Distribution Board.

Connect the photovoltaic solar power system to the non-essential side of the nominated electrical Distribution Board.

The Contractor must allow for the shortest possible AC cable run with facilitated cable installation and cable access without obstructing any walkways, passages or windows.

5.5 WIRING

Conceal cables and conduits wherever practicable.

5.6 CONDUITS

Type: Rigid.

Conduit size: ≥ 20 mm.

5.7 COLOUR CODE

The following colour code must be used throughout the installation:

Busbars and cabling within switchboards, and all submains cores and polyphase subcircuits must be coloured red, white and blue in accordance with the Electricity Distributor's phase rotation and consistent throughout the site. Wrong phase rotation and consequences shall be rectified at the Contractor's expense.

Single-phase subcircuits for lighting and power must be coloured as follows:

Active conductors	Three Phase	red, white, blue
	Single Phase	red
Neutral conductors	black	
Switchwires	white	
Earth conductors	green/yellow	

5.8 MARKING AND LABELLING

General: Provide labels including control and circuit equipment ratings, functional units, notices for operational and maintenance personnel, incoming and outgoing circuit rating, sizes and origin of supply.

ADDITIONAL MARKINGS: Provide marking as follows in addition to that required by AS 3000.

Labelling of switchboards must be in accordance with AS 4777.1. Signs shall be installed in prominent positions on the Main Switchboard and all immediate distribution boards. The warning label wording must be identical to the SIGN EXAMPLES given in APPENDIX A of AS 4777.1.

Lettering heights: Include the following requirements:

- Isolating switches: ≥ 5 mm
- Switchboards, main assembly designation: ≥ 25 mm
- Switchboards, outgoing functional units: ≥ 8 mm
- Switchboards, sub assembly designations: ≥ 15 mm
- Warning notices: ≥ 4mm

5.9 SINGLE-LINE DIAGRAMS

Provide a single-line diagram of the photovoltaic solar power generator on the inside door of the DC combiner box.

Format: Non-fading print, at least A3 size, showing the situation as installed.

5.10 ELECTRICITY DISTRIBUTOR NOTIFICATION

Notify the local Electricity Distributor and comply with the Electricity Distributor’s service and installation rules which includes, but is not limited to:

- Lodging a Application for Connection form and Supplementary Application for Connection form;
- Providing Notice of Electrical Work;
- Undertaking a mandatory site inspection by the Electricity Distributor.

Make all necessary applications and pay any fees in relation to connecting the photovoltaic solar power system to the local Electricity Distributor's network.

6 SITE REQUIREMENTS

6.1 WORK METHOD STATEMENT AND SAFETY PROCEDURE

The Contractor must ensure the provision and maintenance of WorkCover approved stable and securely fenced work platform, secure perimeter screens, fencing, handrails or other forms of physical barriers that are capable of preventing the fall of a person, or tools and equipment.

All anchorage points must be inspected by a competent person before their first use and then on a regular basis so they are capable of supporting the design loads.

6.2 OTHER REQUIREMENTS

The Contractor is responsible for keeping the works area and adjacent surroundings clean and tidy at all times. At the completion of each days work, the work areas must be left clean and secure to the satisfaction of the School Principal.

Any damage to school infrastructure, including roof material or other equipment is to be repaired to the satisfaction of the School Principal.

7 METERING REQUIREMENTS

The service provider will arrange all metering requirements for the connection and export of electricity for all photovoltaic solar power systems ≥ 5 kilowatts peak nominal capacity to the grid for billing purposes. This includes the provision of appropriate meters, which meet the requirements of the local distribution network service provider, and the physical connection of the Photovoltaic system to the electricity grid.

The metering equipment and metering installation must comply with the following:

- NSW Service and Installation Rules;
- Electricity Distributor's service and installation rules
- AS/NZS 3000 Wiring Rules;
- The National Electricity Rules.

8 TESTING AND COMMISSIONING

8.1 TESTS

Commissioning tests as listed below must be performed in accordance with AS/NZS 5033:2005 Appendix I.

In addition to the commissioning tests outlined below all photovoltaic equipment must be tested that they are operating correctly including the photovoltaic modules, modules strings, inverter(s), meter, data-logger and electrical protection devices.

- Open Circuit Voltage Measurements
- Short Circuit Current Measurements
- Earth Fault Protection Test (if relevant)

Before completion, provide one copy of each Ready for Test certificate, now called Certificate of Compliance Electrical Work, as submitted to the Electricity Distributor and as required by the Electricity Distributor and the Department of Fair Trading.

9 COMPLETION

9.1 ON-SITE TRAINING

On completion of the installation, the Contractor will provide instructions to the School Principal and nominated staff on the main components of the system (including cabling, wiring and shut-down procedure) and instruct them in basic maintenance and trouble shooting (for a minimum of one hour).

9.2 WARRANTEES OR GUARANTEES

The Contractor shall obtain, and ensure the School Principal will have the benefit of all warranties or guarantees on all new equipment and materials installed by the Contractor.

Copies of any warranty documents must be forwarded to the School Principal and Department of Education and Training Regional Asset Management Unit.

9.3 OTHER REQUIREMENTS

Fully clear the Site and clean the works of this contract on completion. Cleaning must include the removal of all cement, paint droppings, plaster and other foreign matter from conduit and pipework, plant equipment and fittings. All damaged finishes must be made good.

10 MAINTENANCE

The Customer will have the option of of obtaining maintenance and servicing from either the Contractor or may use the services of another provider. Using the services of another provider will not invalidate any warranties offered by the Contractor

Maintenance and servicing is to be provided as a costed option for the PV system for a 12 year period. A suggested Maintenance Schedule is detailed below. Tenderers are to provide details of their maintenance schedules and costs associated with maintenance at Part C.

In the event that a Customer selects the Contractor to provide maintenance the Contractor is required to record and log all maintenance inspections and provide the completed maintenance logbook at the conclusion of the 12 year maintenance period.

Call out: Respond to call outs for breakdowns or other faults requiring corrective maintenance. Attend on site within 1 calendar week of notification if required. Rectify faults and replace faulty materials and equipment as agreed with the School Principal.

Maintenance Schedule

SYSTEM OR COMPONENT	MAINTENANCE ACTION	FREQUENCY	REMARKS
PV modules	Check for visual defects including: a) Fractures b) Browning or discolouration c) Moisture penetration d) Frame corrosion	Every 3 Years	Modules with visual defects should be further inspected for performance and safety to determine the need for replacement
	Inspect junction boxes for: a) Tightness of connections b) Water accumulation / build up c) Integrity of lid seals d) Integrity of cable entrance, glands and/or conduit sealing e) Integrity of clamping devices Verify by-pass diodes	Every 3 Years	Any defective seals, clamps and by-pass diodes should be replaced
Wiring installation	Verify mechanical integrity of conduits	Every 6 years	Any damaged conduit should be replaced
	Verify insulation integrity of cables installed without conduit	Every 6 years	Any damaged cable should be replaced
	Check junction boxes for: a) Tightness of connections b) Water accumulation / build up c) Integrity of lid seals d) Integrity of cable entrance, glands and/or conduit sealing e) Integrity of clamping devices Verify: i. Blocking diodes ii. Surge arresters for degradation	Every 3 Years	Any defective seals, clamps, blocking diodes and surge arresters should be replaced
	Check earthing connections (if applicable): a) Tightness of connections b) Corrosion	Every 3 Years	Replace if necessary
Electrical characteristics	Measure open circuit voltages	Every 3 Years	Record results in maintenance logbook
	Measure short circuit currents	Every 3 Years	

SYSTEM OR COMPONENT	MAINTENANCE ACTION	FREQUENCY	REMARKS
	Check PV array electrical output is consistent with prevailing weather conditions	Every 3 Years	
	Check inverter station operation is correct	Every 3 Years	
Protective devices	Verify operation of circuit breaker(s)	Every 3 Years	
	Verify operation of earth fault current protection system	Every 3 Years	
	Verify operation of solar array isolation device(s)	Every 3 Years	
Mounting structures	Verify tightness and integrity of bolts and other fastening devices	Every 3 Years	
	Check array mounting security	Every 3 Years	
	Check damage to mechanical cable protection	Every 3 years	
	Inspect for corrosion	Every 6 years	

11 OTHER REQUIREMENTS

11.1 PLANNING APPROVAL

The Contractor must make all arrangements and must pay all necessary fees to obtain planning approval to install photovoltaic solar power systems at every site.

Under no circumstances should construction and installation proceed without the proper planning approval.

The following advice is offered:

State Environmental Planning Policy (Infrastructure) 2007

Photovoltaic systems come generally under Clause 39 of the State Environmental Planning Policy (Infrastructure) 2007 as 'Exempt development' if they are undertaken by or on behalf of Public Authorities and:

- Comply with Clause 20 of the SEPP (Infrastructure) 2007 i.e.
    - Must not cause the building to contravene the Building Code of Australia
    - Must involve no more than minimal impact on the environment or amenity of the surrounding area

  - If the building / school is a State or local heritage item or within a heritage conservation area, the PV system must involve no more than minimal impacts on the heritage significance of the item or area
- The system is integrated into the building or is flush or parallel with the surface of its roof
- The development does not:
  - Reduce the structural integrity of, or involve structural alterations to the building
  - Necessitate the removal of trees from near the building to ensure that solar energy is available for the system
- On average, over any 5 year period, at least 75% of the electricity generated by the system in a 12 month period is used in or for the building
- The system is not located on a building that is a State or local heritage item or is in a heritage conservation area.

If the requirements for Clause 39 'Exempt development' are not met, the photovoltaic system may fall under Clause 37 'Complying development' if:

- It does not necessitate the removal of trees from near the building to ensure solar energy is available
- It does not create excessive glare or reflection onto any adjacent building
- It does not block views or otherwise adversely affect any adjacent property
- It is not located on a building that is a State or local heritage item or is in a heritage conservation area.

Complying development requires a Complying Development certificate to be obtained from an accredited authority (normally the local council) and submitted to the local consent authority.

All other types of photovoltaic systems that neither meet Clause 37 or 39 of the SEPP (Infrastructure) 2007 will require development consent from the local consent authority.

SEPP (Infrastructure) 2007 is available at: http://www.legislation.nsw.gov.au/

11.2 INSPECTION AND PUBLICATION OF PV SYSTEM INFORMATION

Parties chosen at the School Principal's discretion will be allowed to visually inspect all parts of the photovoltaic system after practical completion, at the School Principal's own risk. This does not include physical intervention with any part of the system, other then simple operation of the data logger or inverter, or for physical intervention during emergency situations.

In addition, pictures of any part of the photovoltaic installation, or documents regarding the photovoltaic system, and any other information obtained by the system's data-logger, are the property of the NSW Department of Education and Training.

The Contractor must obtain the approval of the NSW Department of Education and Training before the project can be used in any marketing or advertising material. If no approval is provided, then marketing or advertising is prohibited.

11.3 WORKING HOURS AND WORKING DAYS

The Contractor is to contact the School Principal to arrange a suitable time to carry out the Work.

11.4 REMOVAL OF TREES

Under no circumstances should trees be removed to improve solar generation. Photovoltaic systems should be located in areas away from trees wherever possible.

END OF SECTION –TECHNICAL SPECIFICATION

Australian Government

Department of the Environment, Water, Heritage and the Arts

National Solar Schools Program – solar power system installation report

Part A – to be completed by school authorised person

1 Project ID

School name

2 Installation details

Date the photovoltaic system installation was completed / /

Name of electrician who carried out 240V AC wiring

Licence number of electrician who carried out 240V AC wiring

3 Checklist – before signing and returning this form please ensure you have included all items on the following list:

Part B and C of this form have been completed and signed by **either** the system installer **or** the installing electrician and the system designer that supervised the installation. ☐

A diagram from your installer of the electrical layout of the solar power system, including as a minimum:
- all new and all existing equipment items
- fuses and earths
- an indication of how the panels are wired

☐

Photographs clearly showing:
- the position of the solar panel array including the building on which it is mounted
- mounting and external cabling
- the inverter and control system layout
- smart meter and display
- on the back of one of the photos a signed statement to certify that the system has been installed at the school address

☐

A copy of a Certificate of Electrical Safety, Notice of Completion, or equivalent as required in your state ☐

4 School's authorised person's certification

I hereby certify that:

- to best of my knowledge the information contained in this report is current, truthful and correct
- the photovoltaic system was installed, or the installation was supervised, by a person who has current accreditation with the Clean Energy Council

Signed

Date / /

Name

Position at organisation

Part B – Installer's certification (to be completed by the system installer)

I hereby certify that:

- I have installed the photovoltaic system at the following address:

	Postcode

- I am **EITHER** an installer accredited by the Clean Energy Council **OR** a licensed electrician who has been supervised by a designer accredited by the Clean Energy Council
- I have installed the photovoltaic system to meet all relevant standards, building codes and local council requirements and in such a way that no manufacturer's warranty on any piece of equipment is invalidated
- All information contained in this report is current, truthful, and correct
- I understand that the Department of the Environment, Water, Heritage and the Arts or their approved representative may, with reasonable notice, inspect this system at any time and that any faults found will be reported to the Clean Energy Council or any subsequent accreditation body
- The performance, maintenance and design of the photovoltaic system has been explained in full and I have provided a diagram of the system electrical layout to the school
- I have given the school a 12 month warranty on my workmanship
- I have arranged for the photovoltaic system to be connected to the grid

Supplier name			
AND			
Designer name		Accreditation number	
Signed		Date	/ /
AND			
Installer/supervisor name		Accreditation number	
Signed		Date	/ /
AND			
Electrician name		Licence number	
Signed		Date	/ /

Part C – to be completed by the system installer

The installed solar power system is:

☐ New **OR** ☐ Extension to existing system

PV panels installed:

Manufacturer	
Model number	
Capacity (watts per panel)	
Quantity	
Total capacity installed (watts)	

Existing PV panels (if applicable):

Capacity (watts)	

Inverter installed:

Manufacturer	
Model number	
Capacity (watts)	

Existing inverter included in system (if applicable):

Capacity (watts)	

NATSPEC REFERENCE

ELECTRICAL SERVICES

APRIL 2008

NATSPEC//

© Construction Information Systems Limited, 2008

Apart from any fair dealing for the purposes of private study, review, criticism or research as permitted under the Copyright Act, no part of this publication may be reproduced or copied by any means whatsoever without the prior written permission of Construction Information Systems Limited.

Published by
NATSPEC//Construction Information
Level 4
217 Clarence Street
SYDNEY NSW 2000
AUSTRALIA
phone 1300 797 142
fax 1300 797 143
mail@natspec.com.au
www.natspec.com.au

Construction Information Systems Limited expressly disclaims all and any liability and responsibility to any persons whether a purchaser or reader of this publication or not, in respect of anything, and of any consequence of anything, done or omitted to be done by any such person in reliance, whether wholly or partially, upon the whole or any part of the contents of this publication. The contents of this publication are an assistance to purchasers and readers, but it is the purchasers' and readers' responsibility to determine the appropriateness of such contents. Therefore Construction Information Systems will not be liable in respect of any use of application of such contents.

INTRODUCTION

PREFACE

This Introduction does not form part of the contract

NATSPEC *Reference – Electrical Services* is for use with a specification written for a specific project (the project specification). NATSPEC Reference – *Electrical Services* IS NOT A STAND-ALONE DOCUMENT and is only useable in conjunction with a project specification.

Refer to the NATSPEC Schedules – Electrical for guidance on how to incorporate this document into a specification in a legally binding way. NATSPEC Schedules – Electrical are supplied to NATSPEC subscribers.

COPYRIGHT

NATSPEC is a not-for-profit company owned by key industry stakeholders.

This document and all other NATSPEC material is copyright. To reference it in your specification you must be a current NATSPEC subscriber. If you use it in a specification without being a current NATSPEC subscriber you not only infringe NATSPEC's copyright but you diminish your industry.

Contractors and others may use it only as part of contract documents prepared by a current NATSPEC subscriber for an individual project.

0171 General requirements 1
0172 General requirements (interior and alterations) 6
0175 General requirements (Electrical) 12
0181 Adhesives, sealants and fasteners 23
0182 Fire-stopping 27
0183 Metals and prefinishes 29
0186 Building IT components 31
0201 Demolition 33
0223 Service trenching 35
0501 Demolition (interior and alterations) 37
0901 Electrical general requirements 39
0902 Electrical design and install 46
0911 Cable support and duct systems 53
0921 Low voltage power systems 57
0931 Power generation – diesel 61
0933 Power generation – photovoltaic 67
0937 Uninterruptible power supply 70
0941 Switchboards – proprietary 71
0942 Switchboards – custom-built 72
0943 Switchboard components 78
0947 Power factor correction 86
0951 Lighting 88
0952 Luminaires – custom-built 91
0961 Telecommunications cabling 92
0962 Television distribution systems 95
0971 Emergency evacuation lighting 98
0972 Fire detection and alarms 100
0973 Emergency warning and intercommunication 102
0979 Lightning protection 103
0981 Electronic security 104
Referenced documents 108

This page is blank.

0171 GENERAL REQUIREMENTS

1 GENERAL

1.1 PRECEDENCE

Precedence
General: Requirements of subsequent worksections of the specification override conflicting requirements in this worksection.

1.2 CROSS REFERENCES

Common requirements
Associated worksections: Conform to the following:
- *Adhesives, seals and fasteners*.
- *Fire-stopping*.
- *Metals and prefinishes*.
- *Termite management*.
- *Timber finishes and treatment*.
- *Building IT components.*

Cross referencing
Within the text:
- Worksection titles are indicated by *Italicised* text.
- Clause titles are indicated by **Bold** text.

1.3 REFERENCED DOCUMENTS

Contractual relationships
General: Responsibilities and duties of the principal, contractor and contract administrator are not altered by requirements in the documents referenced in this specification.

Current editions
General: Use referenced documents which are the editions, with amendments, current 3 months before the closing date for tenders, except where other editions or amendments are required by statutory authorities.

1.4 INTERPRETATION

Abbreviations
General: For the purposes of this contract the abbreviations given below apply.
- AS: Australian Standard.
- BCA: Building Code of Australia.
- CFC: Compressed fibre cement.
- CSIRO CMSE: ActivFire Register of Fire Protection Equipment.
- DPC: Damp proof course.
- MS: Mild steel.
- MSDS: Material safety data sheets.
- NATA: National Association of Testing Authorities.
- NZS: New Zealand Standard.
- PCA: Plumbing Code of Australia.
- SS: Stainless steel.
- VOC: Volatile organic compound.

Definitions
General: For the purposes of this contract the definitions given below apply.
- Attendance: ‘Attendance’, ‘provide attendance’ and similar expressions mean ‘give assistance for examination and testing’.
- Contract administrator: ‘Contract administrator’ has the same meaning as ‘architect’ or ‘superintendent’ and is the person appointed by the ‘owner’ or ‘principal’ under the contract.
- Default: Specified value, product or installation method which is to be provided unless otherwise documented.
- Design life: The period of time for which it is assumed, in the design, that an asset will be able to perform its intended purpose with only anticipated maintenance but no major repair or replacement being necessary.
- Documented: ‘Documented’, ‘as documented’ and similar terms mean contained in the contract documents.
- Economic life: The period of time from the acquisition of an asset to when the asset, while still physically capable of fulfilling its function and with only anticipated maintenance, ceases to be the lowest cost alternative for satisfying that function.
- Geotechnical site investigation: The process of evaluating the geotechnical characteristics of the site in the context of existing or proposed construction.
- Give notice: ‘Give notice’, ‘submit’, ‘advise’, ‘inform’ and similar expressions mean ‘give notice (submit, advise, inform) in writing to the contract administrator’.
- Hold point: The activity cannot proceed without the approval of the contract administrator.
- IP: ‘IP’, ‘IP code’, ‘IP rating’ and similar expression have the same meaning as ‘IP Code’ in AS 60529.
- Maintenance period: Synonymous with ‘Defects liability period’.
- Obtain: ‘Obtain’, ‘seek’ and similar expressions mean ‘obtain (seek) in writing from the contract administrator’.
- Metallic-coated: Steel coated with zinc or aluminium-zinc alloy as follows:
  . Metallic-coated steel sheet: To AS 1397. Metal thicknesses specified are base metal thicknesses.
  . Ferrous open sections zinc coated by an in-line process: To AS/NZS 4791.
  . Ferrous hollow sections zinc coated by a continuous or specialised process: To AS/NZS 4792.
- Pipe: Includes pipe and tube.
- Principal: ‘Principal’ has the same meaning as ‘owner’, ‘client’ and ‘proprietor’ and is the party to whom the Contractor is legally bound to construct the works.
- Professional engineer: A person who is listed on the National Professional Engineers Register

(NPER) in the relevant discipline at the relevant time.

- Proprietary: 'Proprietary' means identifiable by naming manufacturer, supplier, installer, trade name, brand name, catalogue or reference number.
- Provide: 'Provide' and similar expressions mean 'supply and install' and include development of the design beyond that documented.
- Registered testing authority:
  . An organisation registered by the National Association of Testing Authorities (NATA) to test in the relevant field; or
  . An organisation outside Australia registered by an authority recognised by NATA through a mutual recognition agreement; or
  . An organisation recognised as being a Registered Testing Authority under legislation at the time the test was undertaken.
- Required: Means required by the documents, the local council or statutory authorities.
- If required: A conditional specification term for work which may be shown in the documents or be a legislative requirement.
- Samples: Includes samples, prototypes and sample panels.
- Supply: 'Supply', 'furnish' and similar expressions mean 'supply only'.
- Tests:
  . Pre-completion tests: Tests carried out before completion tests.
    * Type tests: Tests carried out on an item identical with a production item, before delivery to the site.
    * Production tests: Tests carried out on a purchased item, before delivery to the site.
    * Site tests: Tests carried out on site.
  . Completion tests: Tests carried out on completed installations or systems before the date for practical completion, to demonstrate that the installation or system, including components, controls and equipment, operates correctly, safely and efficiently, and meets performance and other requirements. The superintendent may direct that completion tests be carried out after the date for practical completion.
- Tolerance: The permitted difference between the upper limit and the lower limit of dimension, value or quantity.
- Verification: Provision of evidence or proof that a performance requirement has been met or a default exists.
- Witness points: Provides an opportunity to attend an activity but does not involve an obligation. The activity can proceed without approval from the contract administrator.

1.5 CONTRACT DOCUMENTS

Services diagrammatic layouts

General: Layouts of service lines, plant and equipment shown on the drawings are diagrammatic only, except where figured dimensions are provided or calculable.

Before commencing work:

- Obtain measurements and other necessary information.
- Coordinate the design and installation in conjunction with all trades.

Levels

General: Spot levels take precedence over contour lines and ground profile lines.

1.6 PERFORMANCE

General

General: If required, provide structures, installations and components as follows:

- Fixed access ways: To AS 1657.
- Structural design actions: To AS/NZS 1170.0 and the **Structural design actions schedule**.

1.7 NOTICE

Inspection

Concealment: If notice of inspection is required in respect of parts of the works that are to be concealed, advise when the inspection can be made before concealment.

Minimum notice for inspections to be made: Conform to the **Notices schedule.**

Light level requirements: to AS 1680.2.4.

Submissions

Proposed products schedules: If major products are not specified as proprietary items, submit a schedule of those proposed for use within 3 weeks of site possession.

Tests

General: Give notice of the time and place of nominated tests.

Minimum notice for witnessing of tests to be made: Conform to the **Notices schedule.**

Attendance

General: Provide attendance for inspection and tests.

1.8 SUBMISSIONS

General

Default timing: Make submissions at least 5 working days before ordering products for, or starting installation of, the respective portion of the works.

Authorities

Authorities' approvals: Submit documents showing approval by the authorities whose requirements apply to the work.

Correspondence: Submit copies of correspondence and notes of meetings with authorities whose requirements apply to the work.

Hard copy submissions

Quantity:

- Loose documents larger than A3: One transparency on heavyweight plastic film the same size as the standard contract drawings.
- Loose documents up to and including A3: One copy.

Errors

General: If a submission contains errors, make a new or amended submission as appropriate, indicating changes made since the previous submission.

Identification

General: Identify the project, contractor, subcontractor or supplier, manufacturer, applicable product, model number and options, as appropriate and include pertinent contract document references. Include service connection requirements and product certification. Identify proposals for non-compliance with project requirements, and characteristics which may be detrimental to successful performance of the completed work.

Inspection and testing plan

General: Submit an inspection and testing plan which is consistent with the construction program. Include particulars of test stages and procedures.

Test reports: Submit written reports on nominated tests.

Materials and components

Product certification: If products must conform to product certification schemes, submit evidence of conformance.

Product data: For proprietary equipment, submit the manufacturer's product data as follows:

- Technical specifications and drawings.
- Type-test reports.
- Performance and rating tables.
- Recommendations for installation and maintenance.
- Additional product data for services equipment:
  . Model name, designation and number.
  . Country of origin and manufacture.
  . Capacity of all system elements.
  . Size, including required clearances for installation.
  . Materials used in the construction.

Substitution

Identified proprietary items: Identification of a proprietary item does not necessarily imply exclusive preference for the item so identified, but indicates the necessary properties of the item.

Performance: Equal to or greater than that specified.

Alternatives: If alternatives to the documented products, methods or systems are proposed, submit sufficient information to permit evaluation of the proposed alternatives, including the following:

- Evidence of conformity to a cited standard.
- Samples.
- Essential technical information, in English.
- Reasons for the proposed substitutions.
- Statement of the extent of revisions to the contract documents.
- Statement of the extent of revisions to the construction program.
- Statement of cost implications including costs outside the contract.
- Statement of consequent alterations to other parts of the works.

Evidence: If the documented products or systems are unavailable within the time constraints of the construction program.

Criteria: If the substitution is for any reason other than unavailability, that the substitution:

- Is of net enhanced value to the principal.
- Is consistent with the contract documents and is as effectual as the identified proprietary item.

Samples

Submission: Submit nominated samples.

Incorporation of samples: If it is intended to incorporate samples into the works, submit proposals. Incorporate samples in the works which have been endorsed for incorporation. Do not incorporate other samples.

Retention of samples: Keep endorsed samples in good condition on site, until practical completion.

Shop drawings

General: If required, submit dimensioned drawings showing details of the fabrication and installation of services and equipment, including relationship to building structure and other services, cable type and size, and marking details.

Diagrammatic layouts: Coordinate work shown diagrammatically in the contract documents, and submit dimensioned set-out drawings.

Checking: Ensure that the drawings have been checked before submission.

1.9 DESIGN

General

Design by contractor: If the contractor provides design, use only appropriately qualified persons and comply with all statutory requirements.

Conflict with the documents: If it is believed that a conflict exists between statutory requirements and the documents, notify the contract administrator immediately and provide a recommendation to resolve the conflict.

2 PRODUCTS

2.1 GENERAL

Manufacturers' or suppliers' recommendations

Provide, including select, if no selection is given, transport, deliver, store, handle, protect, finish, adjust and prepare for use, manufactured items in accordance with the current written recommendations and instructions of the manufacturer or supplier.

Proprietary items/systems/assemblies: Assemble, install or fix to substrate in accordance with the

current written recommendations and instructions of the manufacturer or supplier.

Project modifications: Advise of activities that supplement, or are contrary to, manufacturer's or suppliers' written recommendations and instructions.

Sealed containers

General: If materials or products are supplied by the manufacturer in closed or sealed containers or packages, bring the materials or products to point of use in the original containers or packages.

2.2 TESTS

Attendance

General: Provide attendance on tests.

Testing authorities

General: Except for site tests, have tests carried out by a Registered testing authority and submit test reports.

- Reports: Submit copies of test reports, including certificates for type tests, showing the observations and results of tests and conformance or non-conformance with requirements.
- Site tests: Use instruments calibrated by authorities accredited by a Registered testing authority.

2.3 MATERIALS AND COMPONENTS

Consistency

General: For each material or product use the same manufacturer or source and provide consistent type, size, quality and appearance.

Corrosion resistance

General: Conform to the following corrosivity category with regard to worksection corrosion resistance tables.

Situation

The following classification of situation applies to tables in the worksection corrosion resistance tables.

- Internal:
  . Building fabric protected from salt and moisture by vapour barriers, sarking, sheathing and building wraps.
- External:
  . Includes external leaf and air spaces behind external leaf brickwork or blockwork walls.

Galvanizing

Severe conditions: Galvanize mild steel components (including fasteners) to AS 1214 or AS/NZS 4680 as appropriate, if:

- Exposed to weather.
- Embedded in masonry.
- Exposed to or in air spaces behind external leaf of masonry walls.
- In contact with chemically treated timber, other than CCA.

3 EXECUTION

3.1 WALL CHASING

Holes and chases

General: If holes and chases are required in masonry walls, provide proposals to demonstrate that the structural integrity of the wall is maintained. Do not chase walls nominated as fire rated or acoustic. Parallel chases or recesses on opposite faces of a wall shall not be closer than 600 mm to each other.

Chasing of blockwork: Only in core-filled hollow blocks or in solid blocks which are not designated as structural and shall be to the **Concrete blockwork chasing table**.

Concrete blockwork chasing table

Block thickness (mm)	Depth of chase (maximum mm)
190	35
140	25
90	20

3.2 FIXING

General

Suitability: If equipment and services are not suitable for fixing to non-structural building elements, fix directly to structure and trim around penetrations in non-structural elements.

Fasteners

Use proprietary fasteners capable of transmitting the loads imposed, and sufficient to ensure the rigidity of the assembly.

3.3 COMPLETION

Samples

General: Remove unincorporated samples on completion.

Warranties

General: If a warranty is documented or if a manufacturer's standard warranty extends beyond the end of the defects liability period, name the principal as warrantee . Register with manufacturers as necessary. Retain copies delivered with components and equipment.

Commencement: Commence warranty periods at practical completion or at acceptance of installation, if acceptance is not concurrent with practical completion.

Approval of installer: If installation is not by manufacturer, and product warranty is conditional on the manufacturer's approval of the installer, submit the manufacturer's written approval of the installing firm.

3.4 RECORD DRAWINGS

General

General: Submit record drawings. Show the 'as installed' locations of building elements, plant and equipment. Include 'as installed' amendments to shop drawings. Show off-the-grid dimensions where applicable.

Date for submission: Within 2 weeks after practical completion.

Accuracy

Documents: Incorporate all modifications made during the progress of the work and testing period. Show any provisions for the future.

Endorsement: Sign and date all record drawings. Keep one set of shop drawings on site at all times expressly for the purpose of marking changes made during the progress of the works.

Drawing layout

General: Use the same borders and title block as the contract drawings.

Quantity and format

General: Refer to **Submissions**.

3.5 OPERATION AND MAINTENANCE MANUALS

General

General: Submit operation and maintenance manuals for installations.

Authors and compilers: Personnel experienced in the maintenance and operation of equipment and systems installed, and with editorial ability.

Referenced documents: If referenced documents or technical worksections require that manuals be submitted, include corresponding material in the operation and maintenance manuals.

Subdivision: By installation or system, depending on project size.

Date for draft submission: 2 weeks prior to commencement of training.

Date for final submission: Within 2 weeks after practical completion.

Contents

General: Include the following:

- Certificates:
  . Certificates from authorities.
  . Copies of manufacturers' warranties.
  . Product certification.
- Directory: Names, addresses, and telephone and facsimile numbers of principal consultant, subconsultants, contractor, subcontractors and names of responsible parties.
- Drawings:
  . Record drawings, full size.
- Drawings and technical data: As necessary for the efficient operation and maintenance of the installation.
- Equipment descriptions:
  . Name, address and telephone and facsimile numbers of the manufacturer and supplier of items of equipment installed, together with catalogue list numbers.
  . Schedules (system by system) of equipment, stating locations, duties, performance figures and dates of manufacture. Provide a unique code number cross-referenced to the record and diagrammatic drawings and schedules, including spare parts schedule, for each item of equipment installed.
- Maintenance procedures:
  . Detailed recommendations for preventative maintenance frequency and procedures.
  . Manufacturer's technical literature as appropriate. Register with manufacturer as necessary. Retain copies delivered with equipment.
  . Safe trouble-shooting, disassembly, repair and reassembly, cleaning, alignment and adjustment, balancing and checking procedures. Provide logical step-by-step sequence of instructions for each procedure.
  . Schedule of spares recommended to be held on site, being those items subject to wear or deterioration and which may involve the principal in extended deliveries when replacements are required. Include complete nomenclature and model numbers, and local sources of supply.
- Maintenance records:
  . Documentation to AS 1851 clause 18.2.5.
- Operation procedures:
  . Manufacturers' technical literature as appropriate.
- Table of contents: For each volume. Title to match cover.

Format – electronic copies

Printing: Provide material that can be legibly printed on A4 size paper.

Scope: Provide the same material as specified for hardcopy in electronic format.

Quantity and format: Refer to **Electronic submissions.**

Format – hard copy

General: A4 size loose leaf, in commercial quality, 4 ring binders with hard covers, each indexed, divided and titled. Include the following features:

- Cover: Identify each binder with typed or printed title '*OPERATION AND MAINTENANCE MANUAL*', to spine. Identify title of project, volume number, volume subject matter, and date of issue.
- Dividers: Durable divider for each separate element, with typed description of system and major equipment components. Clearly print short titles under laminated plastic tabs.
- Drawings: Fold drawings to A4 size and accommodate them in the binders so that they may be unfolded without being detached from the rings. Provide with reinforced punched binder tabs.
- Pagination: Number pages.
- Ring size: 50 mm maximum, with compressor bars.
- Text: Manufacturers' printed data, including associated diagrams, or typewritten, single-sided on bond paper, in clear concise English.

Number of copies: 3.

3.6 CLEANING

Final cleaning

General: Before practical completion, clean throughout, including all exterior and interior surfaces except those totally and permanently concealed from view.

Labels: Remove all labels not required for maintenance.

3.7 POST-CONSTRUCTION MANDATORY INSPECTIONS AND MAINTENANCE

General

General: For the duration of the defects liability period, provide inspections and maintenance of safety measures required by the following:

- The Building Code of Australia.
- AS 1851.
- Other statutory requirements applicable to the work.

Records: Provide mandatory records.

Certification: Certify that mandatory inspections and maintenance have been carried out and that the respective items comply with statutory requirements. Submit certification.

Annual inspection: Provide an annual inspection and maintenance immediately prior to the end of the defects liability period.

0172 GENERAL REQUIREMENTS (INTERIOR AND ALTERATIONS)

1 GENERAL

1.1 PRECEDENCE

Precedence

General: Requirements of subsequent worksections of the specification override conflicting requirements in this worksection.

1.2 CROSS REFERENCES

Common requirements

General: Conform to associated worksections as follows:

- *Adhesives, sealants and fasteners*.
- *Fire-stopping*.
- *Metals and prefinishes*.
- *Building IT components*.

Cross referencing

Within the text:

- Worksection titles are indicated by *Italicised* text.
- Clause titles are indicated by **Bold** text.

Precedence

General: Requirements of subsequent worksections of the specification override conflicting requirements in this worksection.

1.3 REFERENCED DOCUMENTS

Contractual relationships

General: Responsibilities and duties of the principal, contractor and contract administrator are not altered by requirements in the documents referenced in this specification.

Current editions

General: Use referenced documents which are the editions, with amendments, current 3 months before the closing date for tenders, except where other editions or amendments are required by statutory authorities.

1.4 INTERPRETATION

Abbreviations

General: For the purposes of this contract the abbreviations given below apply.

- AS: Australian Standard.
- BCA: Building Code of Australia.
- CFC: Compressed fibre cement.
- CSIRO CMSE: ActivFire Register or Fire Protection Equipment.
- DPC: Damp proof course.
- MS: Mild steel.
- MSDS: Materials Safety data sheets.
- NATA: National Association of Testing Authorities.
- NZS: New Zealand Standard.

- PCA: Plumbing Code of Australia.
- SS: Stainless steel.
- VOC: Volatile organic compound.

Definitions

General: For the purposes of this contract the definitions given below apply.

- Attendance: 'Attendance', 'provide attendance' and similar expressions mean 'give assistance for examination and testing'.
- Contract administrator: 'Contract administrator' has the same meaning as 'architect' or 'superintendent' and is the person appointed by the 'owner' or 'principal' under the contract.
- Default: Specified value, product or installation method which is to be provided unless otherwise documented.
- Design life: The period of time for which it as assumed, in the design, that an asset will be able to perform its intended purpose with only anticipated maintenance but no major repair or replacement being necessary.
- Documented: 'Documented', 'as documented' and similar terms mean contained in the contract documents.
- Economic life: The period of time from the acquisition of an asset to when the asset, while still physically capable of fulfilling its function and with only anticipated maintenance, ceases to be the lowest cost alternative for satisfying that function.
- Geotechnical site investigation: The process of evaluating the geotechnical characteristics of the site in the context of existing or proposed construction.
- Give notice: 'Give notice', 'submit', 'advise', 'inform' and similar expressions mean 'give notice (submit, advise, inform) in writing to the contract administrator'.
- Hold point: The activity cannot proceed without the approval of the contract administrator.
- IP: 'IP', 'IP code', 'IP rating' and similar expression have the same meaning as 'IP Code' in AS 60529.
- Maintenance period: Synonymous with 'Defects liability period'.
- Metallic-coated: Steel coated with zinc or aluminium-zinc alloy as follows:
  . Metallic-coated steel sheet: To AS 1397. Metal thicknesses specified are base metal thicknesses.
  . Ferrous open sections zinc coated by an in-line process: To AS/NZS 4791.
  . Ferrous hollow sections zinc coated by a continuous or specialised process: To AS/NZS 4792.
- Obtain: 'Obtain', 'seek' and similar expressions mean 'obtain (seek) in writing from the contract administrator'.
- Principal: 'Principal' has the same meaning as 'owner', 'client' and 'proprietor' and is the party to whom the Contractor is legally bound to construct the works.
- Professional engineer: A person who is listed on the National Professional Engineers Register (NPER) in the relevant discipline at the relevant time.
- Proprietary: 'Proprietary' mean identifiable by naming manufacturer, supplier, installer, trade name, brand name, catalogue or reference number.
- Provide: 'Provide' and similar expressions mean 'supply and install' and include development of the design beyond that documented.
- Registered testing authority:
  . An organisation registered by the National Association of Testing Authorities (NATA) to test in the relevant field; or
  . An organisation outside Australia registered by an authority recognised by NATA through a mutual recognition agreement; or
  . An organisation recognised as being a Registered Testing Authority under legislation at the time the test was undertaken.
- Required: Means required by the documents, the local council or statutory authorities.
- Samples: Includes samples, prototypes and sample panels.
- Supply: 'Supply', 'furnish' and similar expressions mean 'supply only'.
- Tests:
  . Pre-completion tests: Tests carried out before completion tests.
    * Type tests: Tests carried out on an item identical with a production item, before delivery to the site.
    * Production tests: Tests carried out on a purchased item, before delivery to the site.
    * Site tests: Tests carried out on site.
  . Completion tests: Tests carried out on completed installations or systems before the date for practical completion, to demonstrate that the installation or system, including components, controls and equipment, operates correctly, safely and efficiently, and meets performance and other requirements. The superintendent may direct that completion tests be carried out after the date for practical completion.
- Tolerance: The permitted difference between the upper limit and the lower limit of dimension, value or quantity.
- Verification: Provision of evidence or proof that a performance requirement has been met or a default exists.
- Witness points: Provides an opportunity to attend an activity but does not involve an obligation. The activity can proceed without approval from the contract administrator.

1.5 CONTRACT DOCUMENTS

Services diagrammatic layouts

General: Layouts of service lines, plant and equipment shown on the drawings are diagrammatic

only, except where figured dimensions are provided or calculable.

Before commencing work:

- Obtain measurements and other necessary information.
- Coordinate the design and installation in conjunction with all trades.

1.6 NOTICE

Inspection

Concealment: If notice of inspection is required in respect of parts of the works that are to be concealed, advise when the inspection can be made before concealment.

Minimum notice for inspections to be made: Conform to the **Notices schedule.**

Light level requirements: to AS/NZS 1680.2.4.

Submissions

Proposed products schedules: If major products are not specified as proprietary items, submit a schedule of those proposed for use within 3 weeks of site possession.

Tests

General: Give notice of the time and place of nominated tests.

Minimum notice for witnessing of tests to be made: Conform to the **Notices schedule.**

Attendance

General: Provide attendance for inspection and tests.

1.7 SUBMISSIONS

Default timing: Make submissions at least 5 working days before ordering products for, or starting installation of, the respective portion of the works.

Authorities

Authorities' approvals: If required, submit documents showing approval by the authorities whose requirements apply to the work.

Correspondence: Submit copies of correspondence and notes of meetings with authorities whose requirements apply to the work.

Hard copy submissions

Quantity:

- Loose documents larger than A3: One transparency on heavyweight plastic film the same size as the standard contract drawings.
- Loose documents up to and including A3: One copy.

Errors

General: If a submission contains errors, make a new or amended submission as appropriate, indicating changes made since the previous submission.

Identification

General: Identify the project, contractor, subcontractor or supplier, manufacturer, applicable product, model number and options, as appropriate and include pertinent contract document references. Include service connection requirements and product certification. Identify proposals for non-compliance with project requirements, and characteristics which may be detrimental to successful performance of the completed work.

Inspection and testing plan

General: Submit an inspection and testing plan which is consistent with the construction program. Include particulars of test stages and procedures.

Test reports: Submit written reports on nominated tests.

Materials and components

Product certification: If products must conform to product certification schemes, submit evidence of conformance.

Product data: For proprietary equipment, submit the manufacturer's product data as follows:

- Technical specifications and drawings.
- Type-test reports.
- Performance and rating tables.
- Recommendations for installation and maintenance.
- Additional product data for services equipment:
  - Model name, designation and number.
  - Country of origin and manufacture.
  - Capacity of all system elements.
  - Size, including required clearances for installation.
  - Materials used in the construction.

Proposed products schedules: If major products are not specified as proprietary items, submit a schedule of those proposed for use within 3 weeks of site possession.

Substitution

Identified proprietary items: Identification of a proprietary item does not necessarily imply exclusive preference for the item so identified, but indicates the necessary properties of the item.

Performance: Equal to or greater than that specified.

Alternatives: If alternatives to the documented products, methods or systems are proposed, submit sufficient information to permit evaluation of the proposed alternatives including the following:

- Evidence of conformity to a cited standard.
- Samples.
- Essential technical information, in English.
- Reasons for the proposed substitutions.
- Statement of the extent of revisions to the contract documents.
- Statement of the extent of revisions to the construction program.
- Statement of cost implications including costs outside the contract.
- Statement of consequent alterations to other parts of the works.

Evidence: If the documented products or systems are unavailable within the time constraints of the construction programme.

Criteria: If the substitution is for any reason other than unavailability, that the substitution:

- Is of net enhanced value to the principal.
- Is consistent with the contract documents and is as effectual as the identified proprietary item.

Samples

Submission: Submit nominated samples.

Incorporation of samples: If it is intended to incorporate samples into the works, submit proposals. Incorporate samples in the works which have been endorsed for incorporation. Do not incorporate other samples.

Retention of samples: Keep endorsed samples in good condition on site, until practical completion.

Shop drawings

General: If required, submit dimensioned drawings showing details of the fabrication and installation of services and equipment, including relationship to building structure and other services, cable type and size, and marking details.

Diagrammatic layouts: Coordinate work shown diagrammatically in the contract documents, and submit dimensioned set-out drawings.

Checking: Ensure that the drawings have been checked before submission.

1.8 DESIGN

General

Design by contractor: If the contractor provides design, use only appropriately qualified persons and comply with all statutory requirements.

Conflict with the documents: If it is believed that a conflict exists between statutory requirements and the documents, notify the contract administrator immediately and provide a recommendation to resolve the conflict.

2 PRODUCTS

2.1 GENERAL

Manufacturers' or suppliers' recommendations

Provide, including select, if no selection is given, transport, deliver, store, handle, protect, finish, adjust and prepare for use, manufactured items in accordance with the current written recommendations and instructions of the manufacturer or supplier.

Proprietary items/systems/assemblies: Assemble, install or fix to substrate in accordance with the current written recommendations and instructions of the manufacturer or supplier.

Project modifications: Advise of activities that supplement, or are contrary to, manufacturer's or suppliers' written recommendations and instructions.

Sealed containers

General: If materials or products are supplied by the manufacturer in closed or sealed containers or packages, bring the materials or products to point of use in the original containers or packages.

2.2 TESTS

Attendance

General: Provide attendance on tests where nominated in worksections.

Testing authorities

General: Except for site tests, have tests carried out by a Registered testing authority and submit test reports.

- Reports: Submit copies of test reports, including certificates for type tests, showing the observations and results of tests and conformance or non-conformance with requirements.
- Site tests: Use instruments calibrated by authorities accredited by a Registered testing authority.

2.3 MATERIALS AND COMPONENTS

Consistency

General: For of each material or product use the same manufacturer or source and provide consistent type, size, quality and appearance.

Corrosion resistance

General: Conform to the following corrosivity category with regard to worksection corrosion resistance tables.

Situation

The following classification of situation applies to tables in the worksection corrosion resistance tables.

- Internal:
  - building fabric protected from salt and moisture by vapour barriers, sarking, sheathing and building wraps.
- External:
  - includes external leaf and air spaces behind external leaf brickwork or blockwork walls.

Galvanizing

Severe conditions: Galvanize mild steel components (including fasteners) to AS 1214 or AS/NZS 4680 as appropriate, if:

- Exposed to weather.
- Embedded in masonry.
- Exposed to or in air spaces behind external leaf of masonry walls.
- In contact with chemically treated timber, other than CCA.

2.4 BASE BUILDING SUBSTITUTIONS

Ownership

General: If any base building items are removed for replacement by the tenant they remain the property of the building owner. Arrange storage for future reinstallation.

3 EXECUTION

3.1 WALL CHASING

Holes and chases

General: If holes and chases are required in masonry walls, provide proposals to demonstrate that the structural integrity of the wall is maintained. Do not chase walls nominated as fire rated or acoustic. Parallel chases or recesses on opposite faces of a wall shall not be closer than 600 mm to each other.

Chasing of blockwork: Only in core-filled hollow blocks or in solid blocks which are not designated as structural and shall be to the **Concrete blockwork chasing table**.

Concrete blockwork chasing table

Block thickness (mm)	Depth of chase (maximum mm)
190	35
140	25
90	20

3.2 FIXING

General

Suitability: If equipment and services are not suitable for fixing to non-structural building elements, fix directly to structure and trim around penetrations in non-structural elements.

Fasteners

Use proprietary fasteners capable or transmitting the loads imposed, and sufficient to ensure the rigidity of the assembly.

3.3 COMPLETION

Samples

General: Remove unincorporated samples on completion.

Warranties

General: If a warranty is documented or if a manufacturer's standard warranty extends beyond the end of the defects liability period, name the principal as warrantee. Register with manufacturers as necessary. Retain copies delivered with components and equipment.

Commencement: Commence warranty periods at practical completion or at acceptance of installation, if acceptance is not concurrent with practical completion.

Approval of installer: If installation is not by manufacturer, and product warranty is conditional on the manufacturer's approval of the installer, submit the manufacturer's written approval of the installing firm.

3.4 RECORD DRAWINGS

General

General: Submit record drawings. Show the 'as installed' locations of building elements, plant and equipment. Include 'as installed' amendments to shop drawings. Show off-the-grid dimensions where applicable.

Extensions and/or changes to existing: If a drawing shows extensions and/or alterations to existing installations, include sufficient of the existing installation to make the drawing comprehensible without reference to drawings of the original installation.

Date for submission: Within 2 weeks after practical completion.

Accuracy

Documents: Incorporate all modifications made during the progress of the work and testing period. Show any provisions for the future.

Endorsement: Sign and date all record drawings. Keep one set of shop drawings on site at all times expressly for the purpose of marking changes made during the progress of the works.

Drawing layout

General: Use the same borders and title block as the contract drawings.

Quantity and format

General: Refer to **SUBMISSIONS**.

3.5 OPERATION AND MAINTENANCE MANUALS

General

General: Submit operation and maintenance manuals for installations.

Authors and compilers: Personnel experienced in the maintenance and operation of equipment and systems installed, and with editorial ability.

Referenced documents: If referenced documents or technical worksections require that manuals be submitted, include corresponding material in the operation and maintenance manuals.

Subdivision: By installation or system, depending on project size.

Date for draft submission: 2 weeks prior to commencement of training.

Date for submission: Within 2 weeks after practical completion.

Contents

General: Include the following:

- Certificates:
  - . Certificates from authorities.
  - . Copies of manufacturers' warranties.
  - . Product certification.
- Directory: Names, addresses, and telephone and facsimile numbers of principal consultant, subconsultants, contractor, subcontractors and names of responsible parties.
- Drawings:
  - . Record drawings, full size.
- Drawings and technical data: As necessary for the efficient operation and maintenance of the installation.
- Equipment descriptions:
  - . Name, address and telephone and facsimile numbers of the manufacturer and supplier of items of equipment installed, together with catalogue list numbers.

. Schedules (system by system) of equipment, stating locations, duties, performance figures and dates of manufacture. Provide a unique code number cross-referenced to the record and diagrammatic drawings and schedules, including spare parts schedule, for each item of equipment installed.

- Maintenance procedures:
  . Detailed recommendations for preventative maintenance frequency and procedures.
  . Manufacturer's technical literature as appropriate. Register with manufacturer as necessary. Retain copies delivered with equipment.
  . Safe trouble-shooting, disassembly, repair and reassembly, cleaning, alignment and adjustment, balancing and checking procedures. Provide logical step-by-step sequence of instructions for each procedure.
  . Schedule of spares recommended to be held on site, being those items subject to wear or deterioration and which may involve the principal in extended deliveries when replacements are required. Include complete nomenclature and model numbers, and local sources of supply.
- Maintenance records:
  . Documentation to AS 1851 clause 18.2.5.
- Operation procedures:
  . Manufacturers' technical literature as appropriate.
- Table of contents: For each volume. Title to match cover.

Format – electronic copies

Printing: Except for drawings required in the **Record drawings** clause provide material that can be legibly printed on A4 size paper.

Scope: Provide the same material as specified for hardcopy in electronic format.

Quantity and format: Refer to **Electronic submissions.**

Format – hard copy

General: A4 size loose leaf, in commercial quality, 4 ring binders with hard covers, each indexed, divided and titled. Include the following features:

- Cover: Identify each binder with typed or printed title '*OPERATION AND MAINTENANCE MANUAL*', to spine. Identify title of project, volume number, volume subject matter, and date of issue.
- Dividers: Durable divider for each separate element, with typed description of system and major equipment components. Clearly print short titles under laminated plastic tabs.
- Drawings: Fold drawings to A4 size and accommodate them in the binders so that they may be unfolded without being detached from the rings. Provide with reinforced punched binder tabs.
- Pagination: Number pages.
- Ring size: 50 mm maximum, with compressor bars.
- Text: Manufacturers' printed data, including associated diagrams, or typewritten, single-sided on bond paper, in clear concise English.

Number of copies: 3.

3.6 POST-CONSTRUCTION MANDATORY INSPECTIONS AND MAINTENANCE

General

General: For the duration of the defects liability period, provide inspections and maintenance of safety measures required by the following:

- The Building Code of Australia.
- AS 1851.
- Other statutory requirements applicable to the work.

Records: Provide mandatory records.

Certification: Certify that mandatory inspections and maintenance have been carried out and that the respective items comply with statutory requirements. Submit certification.

Annual inspection: Provide an annual inspection and maintenance immediately prior to the end of the defects liability period.

0175 GENERAL REQUIREMENTS (ELECTRICAL)

1 GENERAL

1.1 AIMS

Responsibilities
General: Provide electrical systems.

Selections: As scheduled

1.2 PRECEDENCE

Precedence
General: Requirements of subsequent worksections of the specification override conflicting requirements in this worksection.

1.3 CROSS REFERENCES

Associated worksections
Associated worksections: Conform to the following:
- *Adhesives, sealants and fasteners*.
- *Fire-stopping*.
- *Metals and prefinishes*.
- *Termite management*.
- *Timber finishes and treatment*.
- *Building IT components.*
- *Demolition.*
- *Service trenching*.

Cross referencing
Within the text:
- Worksection titles are indicated by *Italicised* text.
- Clause titles are indicated by **Bold** text.

1.4 STANDARDS

General
General: To AS/NZS 3000 Part 2 unless otherwise documented.

Electrical systems: To AS/NZS 3008.1.1 and SAA HB 301.

Degrees of protection (IP code): To AS/NZS 60529.

EMC: To AS/NZS 61000.

Telecommunications systems: To AS/ACIF S008, AS/ACIF S009, AS/NZS 3080, SAA HB 243 and SAA HB 29.

1.5 REFERENCED DOCUMENTS

Contractual relationships
General: Responsibilities and duties of the principal, contractor and contract administrator are not altered by requirements in the documents referenced in this specification.

Current editions
General: Use referenced documents which are the editions, with amendments, current 3 months before the closing date for tenders, except where other editions or amendments are required by statutory authorities.

1.6 INTERPRETATION

Abbreviations
General: For the purposes of this contract the abbreviations given below apply.
- AS: Australian Standard.
- BCA: Building Code of Australia.
- CFC: Compressed fibre cement.
- CSIRO CMSE: ActivFire Register or Fire Protection Equipment.
- DPC: Damp proof course.
- EMC: Electromagnetic compatibility.
- EMI: Electromagnetic interference.
- MS: Mild steel.
- MSDS: Material safety data sheets
- NATA: National Association of Testing Authorities.
- NZS: New Zealand Standard.
- PCA: Plumbing Code of Australia.
- SS: Stainless steel.
- .

Definitions
General: For the purposes of this contract the definitions given below apply.
- Accessible: Readily accessible to AS/NZS 3000.
- Attendance: ‘Attendance’, ‘provide attendance’ and similar expressions mean ‘give assistance for examination and testing’.
- Contract administrator: ‘Contract administrator’ has the same meaning as ‘architect’ or ‘superintendent’ and is the person appointed by the ‘owner’ or ‘principal’ under the contract.
- Default: Specified value, product or installation method which is to be provided unless otherwise documented.
- Design life: The period of time for which it is assumed, in the design, that an asset will be able to perform its intended purpose with only anticipated maintenance but no major repair or replacement being necessary.
- Documented: ‘Documented’, ‘as documented’ and similar terms mean contained in the contract documents.
- Economic life: The period of time from the acquisition of an asset to when the asset, while still physically capable of fulfilling its function and with only anticipated maintenance, ceases to be the lowest cost alternative for satisfying that function.
- Geotechnical site investigation: The process of evaluating the geotechnical characteristics of the site in the context of existing or proposed construction.
- Give notice: ‘Give notice’, ‘submit’, ‘advise’, ‘inform’ and similar expressions mean ‘give notice (submit, advise, inform) in writing to the contract administrator’.
- High level interface: Systems transfer information in a digital format using an open system interface.
- Hold point: The activity cannot proceed without the approval of the contract administrator.

- Hot-dip galvanized: Zinc coated to AS/NZS 4680 after fabrication with coating thickness and mass to AS/NZS 4680 Table 1.
- If required: A conditional specification term for work which may be shown in the documents or be a legislative requirement.
- Industrial: IP56 to AS/NZS 60529.
- IP: 'IP', 'IP code', 'IP rating' and similar expression have the same meaning as 'IP Code' in AS 60529.
- Low level interface: Systems transfer information via terminals and voltage free contacts.
- Maintenance period: Synonymous with 'Defects liability period'.
- Obtain: 'Obtain', 'seek' and similar expressions mean 'obtain (seek) in writing from the contract administrator'.
- Professional engineer: A person who is listed on the National Professional Engineers Register (NPER) in the relevant discipline at the relevant time.
- Metallic-coated: Steel coated with zinc or aluminium-zinc alloy as follows:
  . Metallic-coated steel sheet: To AS 1397. Metal thicknesses specified are base metal thicknesses.
  . Ferrous open sections zinc coated by an in-line process: To AS/NZS 4791.
  . Ferrous hollow sections zinc coated by a continuous or specialised process: To AS/NZS 4792.
- Pipe: Includes pipe and tube.
- Principal: 'Principal' has the same meaning as 'owner', 'client' and 'proprietor' and is the party to whom the Contractor is legally bound to construct the works.
- Proprietary: 'Proprietary' mean identifiable by naming manufacturer, supplier, installer, trade name, brand name, catalogue or reference number.
- Provide: 'Provide' and similar expressions mean 'supply and install' and include development of the design beyond that documented.
- Readily accessible: As defined in AS/NZS 3000.
- Registered testing authority:
  . An organisation registered by the National Association of Testing Authorities (NATA) to test in the relevant field; or
  . An organisation outside Australia registered by an authority recognised by NATA through a mutual recognition agreement; or
  . An organisation recognised as being a Registered Testing Authority under legislation at the time the test was undertaken.
- Required: Means required by the documents, the local council or statutory authorities.
- Samples: Includes samples, prototypes and sample panels.
- Supply: 'Supply', 'furnish' and similar expressions mean 'supply only'.
- Tests:
  . Pre-completion tests: Tests carried out before completion tests.
    * Type tests: Tests carried out on an item identical with a production item, before delivery to the site.
    * Production tests: Tests carried out on a purchased item, before delivery to the site.
    * Site tests: Tests carried out on site.
  . Completion tests: Tests carried out on completed installations or systems before the date for practical completion, to demonstrate that the installation or system, including components, controls and equipment, operates correctly, safely and efficiently, and meets performance and other requirements. The superintendent may direct that completion tests be carried out after the date for practical completion.
- Tolerance: The permitted difference between the upper limit and the lower limit of dimension, value or quantity.
- Verification: Provision of evidence or proof that a performance requirement has been met or a default exists.
- Weatherproof: IPX6 to AS/NZS 60529.
- Witness points: Provides an opportunity to attend an activity but does not involve an obligation. The activity can proceed without approval from the contract administrator.

1.7 CONTRACT DOCUMENTS

Services diagrammatic layouts

General: Layouts of service lines, plant and equipment shown on the drawings are diagrammatic only, except where figured dimensions are provided or calculable.

Before commencing work:

- Obtain measurements and other necessary information.
- Coordinate the design and installation in conjunction with all trades.

Levels

General: Spot levels take precedence over contour lines and ground profile lines.

1.8 DRAWINGS AND MANUALS FOR EXISTING SERVICES

General

General: No warranty is given as to the completeness or accuracy of drawings and/or manuals of existing services.

1.9 PERFORMANCE

General

General: If required, provide structures, installations and components as follows:

- Fixed access ways: To AS 1657.
- Structural design actions: To AS/NZS 1170.0 and the **Structural design actions schedule**.

Light level requirements: to AS 1680.2.4.

1.10 NOTICE

Inspection

Concealment: If notice of inspection is required in respect of parts of the works that are to be concealed, advise when the inspection can be made before concealment.

Minimum notice for inspections to be made: Conform to the **Notices schedule**.

Submissions

Proposed products schedules: If major products are not specified as proprietary items, submit a schedule of those proposed for use within 3 weeks of site possession.

Tests

General: Give notice of the time and place of nominated tests.

Minimum notice for witnessing of tests to be made: Conform to the **Notices schedule**.

1.11 INSPECTION

Attendance

General: Provide attendance for inspection and tests.

1.12 SUBMISSIONS

General

Default timing: Make submissions ≥ 5 business days prior to the ordering of products for, or starting the installation of, the respective portions of the works.

Authorities

Authorities' approvals: Submit documents showing approval by the authorities whose requirements apply to the work.

Correspondence: Submit copies of correspondence and notes of meetings with authorities whose requirements apply to the work.

Hard copy submissions

Quantity:

- Loose documents larger than A3: One transparency on heavyweight plastic film the same size as the standard contract drawings.
- Loose documents up to and including A3: One copy.

Errors

General: If a submission contains errors, make a new or amended submission as appropriate, indicating changes made since the previous submission.

Identification

General: Identify the project, contractor, subcontractor or supplier, manufacturer, applicable product, model number and options, as appropriate and include pertinent contract document references. Include service connection requirements and product certification. Identify proposals for non-compliance with project requirements, and characteristics which may be detrimental to successful performance of the completed work.

Inspection and testing plan

General: Submit an inspection and testing plan which is consistent with the construction program. Include particulars of test stages and procedures.

Test reports: Submit written reports on nominated tests.

Materials and components

Product certification: If products must conform to product certification schemes, submit evidence of conformance.

Product data: For proprietary equipment, submit the manufacturer's product data as follows:

- Technical specifications and drawings.
- Type-test reports.
- Performance and rating tables.
- Recommendations for installation and maintenance.
- Additional product data for services equipment:
  - . Model name, designation and number.
  - . Country of origin and manufacture.
  - . Capacity of all system elements.
  - . Size, including required clearances for installation.
  - . Materials used in the construction.

Substitution

Identified proprietary items: Identification of a proprietary item does not necessarily imply exclusive preference for the item so identified, but indicates the necessary properties of the item.

Performance: Equal to or greater than that specified.

Alternatives: If alternatives to the documented products, methods or systems are proposed, submit sufficient information to permit evaluation of the proposed alternatives including the following:

- Evidence of conformity to a cited standard.
- Samples.
- Essential technical information, in English.
- Reasons for the proposed substitutions.
- Statement of the extent of revisions to the contract documents.
- Statement of the extent of revisions to the construction program.
- Statement of cost implications including costs outside the contract.
- Statement of consequent alterations to other parts of the works.

Evidence: If the documented products or systems are unavailable within the time constraints of the construction program.

Criteria: If the substitution is for any reason other than unavailability, that the substitution:

- Is of net enhanced value to the principal.
- Is consistent with the contract documents and is as effectual as the identified proprietary item.

Samples

Submission: Submit nominated samples.

Incorporation of samples: If it is intended to incorporate samples into the works, submit proposals. Incorporate samples in the works which have been endorsed for incorporation. Do not incorporate other samples.

Retention of samples: Keep endorsed samples in good condition on site, until practical completion.

Shop drawings

General: If required, submit dimensioned drawings showing details of the fabrication and installation of services and equipment, including relationship to building structure and other services, cable type and size, and marking details.

Diagrammatic layouts: Coordinate work shown diagrammatically in the contract documents, and submit dimensioned set-out drawings.

Drawings

General: Minimum A1 drawing size.

Standard: To AS 1100 Parts 101 and 301, AS 1102 Parts 101, 102, 103, 106, 107, 108, and 111, and AS/NZS 3085.1 as applicable.

Building work drawings: Submit detailed dimensioned drawings showing all:

- Access doors and panels.
- Conduits to be cast in slabs.
- Holding down bolts and other anchorage and/or fixings required complete with loads to be imposed on the structure during installation and operation.
- Openings, penetrations and block-outs.
- Pipe sleeves.
- Plinths, kerbs and bases.
- Required external openings.

Services coordination: Ensure coordination with other building and service elements. Show adjusted positions on the shop and record drawings.

Space requirements: Check space requirements of equipment and services indicated diagrammatically in the contract documents and submit a report on consequent variations to the design.

Execution details

General: Before starting the respective portions of the installation, submit the following:

- Embedded services: Proposed method for embedding services in concrete walls or floors or chasing into concrete or masonry walls.
- Fixing of services: Typical details of locations, types and methods of fixing of services to structure.
- Inaccessible services: If services will be enclosed and not accessible after completion, submit proposals for location of service runs and fittings.

Marking and labelling

General: Before marking and labelling submit:

- Samples of the proposed labels.
- A schedule showing, for each item or type of item:
  - A description of the item or type of item sufficient to identify it.
  - The proposed text of the marking or label.
  - The proposed location of the marking or label.

Building penetrations

General: If it is proposed to penetrate or fix to the following, submit details of the methods proposed to maintain the required structural, fire and other properties:

- Structural building elements including external walls, fire walls, fire doors and access panels, other tested and rated assemblies or elements, floor slabs and beams.
- Membrane elements including damp-proof courses, waterproofing membranes and roof coverings. If penetrating membranes, provide a waterproof seal between the membrane and the penetrating component.

Technical data

Data to be submitted: Include at least the following information in technical submissions:

- Assumptions.
- Calculations.
- Certification of compliance with the applicable code or standard.
- Design basis and performance parameters.
- Drawings.
- Installation and maintenance requirements.
- Manufacturers' technical literature.
- Risk assessment.
- Samples where relevant.
- Sketch, single line diagram, flowchart.
- Technical data schedules corresponding to the equipment schedules in the contract documents. If there is a discrepancy between the two, substantiate the change.

Certification

Submit certification that the plant and equipment submitted meets all requirements and capacities of the contract documents except for departures that are identified in the submission.

1.13 DESIGN

General

Design by contractor: If the contractor provides design, use only appropriately qualified persons and comply with all statutory requirements.

Conflict with the documents: If it is believed that a conflict exists between statutory requirements and the documents, notify the contract administrator immediately and provide a recommendation to resolve the conflict.

2 PRODUCTS

2.1 PROPRIETARY ITEMS

Manufacturers' or suppliers' recommendations

Proprietary items: Provide, including select, if no selection is given, transport, deliver, store, handle, protect, finish, adjust and prepare for use, manufactured items in accordance with the current written recommendations and instructions of the manufacturer or supplier.

Proprietary systems/assemblies: Assemble, install or fix to substrate in accordance with the current written recommendations and instructions of the manufacturer or supplier.

Project modifications: Advise of activities that supplement, or are contrary to, manufacturer's or

suppliers' written recommendations and instructions.

Product certification: If products must comply with product certification schemes, provide them in accordance with the certification requirements.

Identified proprietary items

Implication: Identification of a proprietary item does not necessarily imply exclusive preference for the item so identified, but indicates the necessary properties of the item.

Sealed containers

General: If materials or products are supplied by the manufacturer in closed or sealed containers or packages, bring the materials or products to point of use in the original containers or packages.

2.2 TESTS

Attendance

General: Provide attendance on tests.

Testing authorities

General: Except for site tests, have tests carried out by a Registered testing authority and submit test reports.

- Reports: Submit copies of test reports, including certificates for type tests, showing the observations and results of tests and conformance or non-conformance with requirements.
- Site tests: Use instruments calibrated by authorities accredited by a Registered testing authority.

2.3 MATERIALS AND COMPONENTS

Consistency

General: For each material or product use the same manufacturer or source and provide consistent type, size, quality and appearance.

Accessories: All accessories and outlets located in close proximity are to be of the same manufacture, size and material and, unless otherwise detailed, of the same colour.

Corrosion resistance

General: Conform to the following corrosivity category with regard to worksection corrosion resistance tables.

3 EXECUTION

3.1 PERFORMANCE

General

Performance criteria: Meet the performance criteria as specified in the relevant worksections.

3.2 FIXING

General

Suitability: If equipment and services are not suitable for fixing to non-structural building elements, fix directly to structure and trim around penetrations in non-structural elements.

Fasteners

Use proprietary fasteners capable or transmitting the loads imposed, and sufficient to ensure the rigidity of the assembly.

3.3 DEMOLITION

General

General: Decommission, isolate, demolish and remove from the site all existing redundant cables and equipment including minor associated components that become redundant as a result of the demolition.

Breaking down: Disassemble or cut up equipment where necessary to allow removal.

Recovered materials: Recover all components associated with the listed items. Minimise damage during removal and deliver to the locations scheduled.

Demolished materials

Demolished materials classes

Ownership and implementation: Comply with the **Demolished materials classes table.**

Demolished materials classes table

Class	Requirement	Ownership
Recovered items for re-use in the works	Recover without damage items identified in the **Recovered items for re-use in the works schedule**	Principal/Proprietor
Recovered items for delivery to the principal	Recover items identified in the **Recovered items for delivery to the** principal schedule	Principal/Proprietor
Demolished for removal	Remove from the site demolished materials identified in the **Demolish for removal schedule**. Do not burn or bury on site Transit: Prevent spillage of demolishing materials in transit	Contractor

Re-used components

General: Clean re-used components and test for compliance with current Australian Standards before returning to service. Provide results of compliance tests.

3.4 WORK ON EXISTING SYSTEMS

General

General: Before starting work on existing systems, measure existing conditions. Submit the results for information.

- If the existing conditions are less than necessary to meet the requirements in the contract documents, submit proposals to rectify the deficiencies with related costing, time and other impacts.

- Subject to the results from the preceding work on existing systems, achieve the performance in the contract documents.

3.5 SERVICES CONNECTIONS

Connections

General: Connect to statutory authorities' services or service points. Excavate to locate and expose connection points. On completion reinstate the surfaces and facilities that have been disturbed.

Statutory authorities' requirements

General: If the authorities elect to perform or supply part of the works, make the necessary arrangements. Install equipment supplied, but not installed, by the authorities.

3.6 INSTALLATION

General

Fixing: If non-structural building elements are not suitable for fixing equipment and services to, fix directly to structure and trim around holes or penetrations in non-structural elements.

Installation: Install equipment and services plumb, fix securely and organise reticulated services neatly. Allow for movement in both structure and services.

Concealment: Conceal all cables, ducts, trays, pipes etc unless installed in plant spaces, ceilings, riser cupboards, etc or unless otherwise detailed. If possible, do not locate on external walls.

Lifting: Provide heavy items of equipment with permanent fixtures for lifting as recommended by the manufacturer.

Suspended ground floors: Keep all parts of services under suspended ground floors > 150 mm clear of the ground surface. Make sure services do not impede access.

Arrangement: Arrange services so that services running together are parallel with each other and with adjacent building elements.

Cable systems

Systems: Provide the following:

- Accessible concealed spaces: Thermoplastic insulated and sheathed cables.
- Inaccessible concealed spaces: Cable in PVC-U conduit.
- Plant rooms: Cable in heavy duty PVC-U conduit, or on tray or in duct.
- Plastered or rendered surfaces: Cable in PVC-U conduit.
- Stud walls without bulk insulation: Thermoplastic insulated and sheathed cables.
- Walls filled with bulk thermal insulation: Cables in PVC conduit.

Installation of accessories

General: Install accessories in conformance with the **Installation of accessories table**.

Location: Final location of all outlets and equipment to be confirmed on site prior to installation.

Default mounting heights to centre of accessory plate:

Outlets	300 mm
Switches and controls	1100 mm

Flush mounting: Provide flush mounted accessories except in plant rooms.

Common face plates: Mount adjacent flush mounted accessories under a common faceplate.

Restricted location: Do not install wall boxes across junctions of wall finishes.

Surface mounting: Proprietary mounting blocks.

Installation of accessories table

Wall construction	Installation and concealed cabling facilities
Rendered masonry partition	Flush wall box with conduit chased into wall
Double sided face brick partition	Vertically mounted flush wall box with conduit concealed in cut bricks
Face brick external cavity wall	Flush wall box with thermoplastic insulated cables in conduit run in cavity and tied against inner brick surface, or thermoplastic sheathed cables run in cavity
Stud partition	Rewirable

Installation of ceiling mounted appliances

Connections: Appliances: Provide flush mounted outlets on the ceiling next to support brackets.

Connections: Fixed equipment: Provide concealed permanent connections.

Fixing: For equipment and appliances heavier than 30 kg provide support through the suspended ceiling to the building structure. Brace appliances that have excessive bending moments, are heavy or vibrate, to prevent horizontal movement.

Differential movement

General: If the geotechnical site investigation report predicts differential movements between buildings and the ground in which conduits are buried, provide movement control joints in the conduits.

- Location: Adjacent to the conduit supports which are closest to the perimeter of the building.
- Arrangement: Arrange conduits to minimise the number of movement control joints.
- Magnitude: Accommodate the predicted movements.

Holes and chases

General: If holes and chases are required in masonry walls, provide proposals to demonstrate that the structural integrity of the wall is maintained. Do not chase walls nominated as fire rated or acoustic. Parallel chases or recesses on opposite faces of a wall shall not be closer than 600 mm to each other.

Chasing of blockwork: Only in core-filled hollow blocks or in solid blocks which are not designated as structural and shall be to the **Concrete blockwork chasing table**.

Concrete blockwork chasing table

Block thickness (mm)	Depth of chase (maximum mm)
190	35
140	25

Block thickness (mm)	Depth of chase (maximum mm)
90	20

Penetrations

Fire rated building elements: Seal penetrations with a system conforming to AS 4072.1.

Non-fire rated building elements: Seal penetrations around conduits and sleeves. Seal around cables within sleeves. If the building element is acoustically rated, maintain the rating.

Sleeves

General: If piping or conduit penetrates building elements, provide metal or PVC-U sleeves formed from pipe sections as follows:

- Movement: Arrange to permit normal pipe or conduit movement.
- Diameter (for non fire-rated building elements): Sufficient to provide an annular space around the pipe or pipe insulation of at least 12 mm.
- Prime paint ferrous surfaces.
- Terminations:
  . If cover plates are fitted: Flush with the finished building surface.
  . In fire-rated and acoustic-rated building elements: 50 mm beyond finished building surface.
  . In floors draining to floor wastes: 50 mm above finished floor.
  . Elsewhere: 5 mm beyond finished building surface.
- Termite management: To AS 3660.1.
- Thickness:
  . Metal: ≥ 1 mm.
  . PVC-U: ≥ 3 mm.

Sleeves for cables

General: For penetrations of cables not enclosed in conduit through ground floor slabs, beams and external walls provide sleeves formed from PVC-U pipe sections.

- MIMS cables: Provide sleeves for penetrations through masonry.

3.7 CONCRETE PLINTHS

Construction

General: Provide plinths conforming to the **Concrete plinths schedule**

- Concrete: Grade N20.
- Finish: Steel float flush with the surround.
- Reinforcement: Single layer of F62 fabric.
- Surround: Provide galvanized steel surround at least 75 mm high and 1.6 mm thick. Fix to the floor with masonry anchors. Fill with concrete.

3.8 PLANT AND EQUIPMENT ACCESS

General

Services and equipment: Locate and arrange all services and equipment so that:

- Failure of plant and equipment (including leaks) does not create a hazard for the building occupants.
- Failure of plant and equipment (including leaks) cause a minimum or no damage to the building, its finishes and contents.
- Inspection and maintenance operations can be arranged to minimise inconvenience and disruption to building occupants or damage to the building structure or finishes.
- Services and equipment are readily accessible for inspection and maintenance and arranged so that inspection and maintenance can be carried out in a safe and efficient manner. Include the following:
  . Conform to the relevant requirements of AS 1470, AS 1657, AS/NZS 1892.1 and AS/NZS 2865.
  . If parts of the plant require regular inspection and maintenance either locate plant so it is safely accessible from floor level or provide permanent access platforms and ladders.
  . In false ceilings locate items of equipment that require inspection and maintenance above tiled parts where possible. If this is not possible (for example if above set plaster or other inaccessible ceilings) provide access panels. Arrange services and plant locations to reduce the number of access panels. Coordinate with other trades to use common access panels where feasible.
  . Modify manufacturer's standard equipment when necessary to provide the plant access in the contract documents.

3.9 SEISMIC RESTRAINT

Provisions

General: Arrange all components, other than service items exempted in AS 1170.4, to resist seismic loads determined in accordance with AS 1170.4. Securely fix all plant and equipment to the building structure. Do not rely on gravity and/or friction to resist seismic forces.

Anti-vibration mounts: Use horizontally restrained type.

Components: Do not use components that will be damaged by earthquake conditions. Protect systems against the adverse effects of components such as mercury switches that, although not damaged by earthquake, may malfunction.

3.10 PAINTING AND FINISHES

General

General: If exposed to view (including in plant rooms) paint new services and equipment.

Surfaces painted or finished off-site: Conform to *Metals and prefinishes.*

Exceptions: Do not paint chromium or nickel plating, anodised aluminium, GRP, stainless steel, non-metallic flexible materials and normally lubricated machined surfaces. Surfaces with finishes applied off-site need not be re-painted on-site provided the corrosion resistance of the finish is not less than that of the respective finish in this clause.

Standard

General: Conform to the recommendations of AS/NZS 2311 Sections 3, 6 and 7 or AS/NZS 2312 Sections 5, 8 and 10, as applicable.

Low VOC emitting paints

Provide the following low odour/low environmental impact paint types with the following VOC limits:

- Primers and undercoats: < 5 g/litre.
- Low gloss white or light coloured latex paints for broadwall areas: < 5 g/litre.
- Coloured low gloss latex paints: < 85 g/litre.
- Gloss latex paints: < 90 g/litre.

Painting systems

New unpainted interior surfaces: To AS/NZS 2311 Table 5.1.

New unpainted exterior surfaces: To AS/NZS 2311 Table 5.2.

Paint application

Coats: Apply the first coat immediately after substrate preparation and before contamination of the substrate can occur. Ensure each coat of paint or clear finish is uniform in colour, gloss, thickness and texture and free of runs, sags, blisters or other discontinuities.

Combinations: Do not combine paints from different manufacturers in a paint system.

Protection: Remove fixtures before starting to paint and refix in position undamaged on completion.

3.11 MARKING AND LABELLING

General

General: Mark services and equipment to provide a ready means of identification.

- Locations exposed to weather: Provide durable materials.
- Pipes, conduits and ducts: Identify and label to AS 1345.
- Cables: Label at each end to indicate the origin and destination of the cable.

Consistency: Label and mark equipment using a consistent scheme across all services elements of the project.

Operating and maintenance manuals: Provide marking an labelling text identical to the text and terminology used in operating and maintenance manuals.

Accessories

Label isolating switches and outlets to identify circuit origin.

Labels and notices

General: Select from the following materials:

- Cast metal.
- For indoor applications only, engraved two-colour laminated plastic.
- Proprietary pre-printed self-adhesive flexible plastic labels.
- Stainless steel or brass ≥ 1 mm thick with black filled engraved lettering.

Emergency functions: To AS 1319.

Colours: Generally in conformance with AS 1345 as appropriate, otherwise black lettering on white background except as follows.

- Danger, warning labels: White lettering on red background.
- Main switch and caution labels: Red lettering on white background.

Edges: If labels exceed 1.5 mm thickness, radius or bevel the edges.

Fixing: Fix labels securely using screws, rivets, proprietary self-adhesive labels or double-sided adhesive tape.

- If labels are mounted in extruded aluminium sections, use rivets or countersunk screws to fix the extrusions.
- Use aluminium or monel rivets for aluminium labels.

Label locations: Locate labels so that they are easily seen and are either attached to, below or next to the item being marked.

Label text: To correspond to terminology and identifying number of the respective item as shown on the record drawings and documents.

Lettering heights:

- Danger, warning and caution notices: ≥ 10 mm for main heading, ≥ 5 mm for remainder.
- Equipment labels within cabinets: ≥ 3.5 mm.
- Identifying labels on outside of cabinets: ≥ 5 mm.
- Isolating switches: ≥ 5 mm.
- Switchboards, main assembly designation: ≥ 25 mm.
- Switchboards, outgoing functional units: ≥ 8 mm.
- Switchboards, sub assembly designations: ≥ 15 mm.
- Other locations: ≥ 3 mm.

Operable devices: Mark to provide a ready means of identification. Include the following:

- Controls.
- Indicators, gauges, meters and the like.
- Isolating switches.
- Outlets.

Underground cable routes

Survey: Accurately record the routes of underground cables before backfilling. Include on the record drawings.

Location marking: Accurately mark the location of underground cables with route markers consisting of a marker plate set flush in a concrete base.

Markers: Place markers at each joint, route junction, change of direction, termination and building entry point and in straight runs at intervals of not more than 100 m.

Marker bases: 200 mm diameter x 200 mm deep, minimum concrete.

Direction marking: Show the direction of the cable run by means of direction arrows on the marker plate. Indicate distance to the next marker.

Plates: Brass, minimum size 75 x 75 x 1 mm thick.

Plate fixing: Waterproof adhesive and 4 brass or stainless steel countersunk screws.

Marker height: Set the marker plate flush with paved surfaces, and 25 mm above other surfaces.

Marker tape: Where electric bricks or covers are not provided over underground wiring, provide a 150 mm wide yellow or orange marker tape bearing the words '*WARNING – electric cable buried below*', laid in the trench 150 mm below ground level.

3.12 POST-CONSTRUCTION MANDATORY INSPECTIONS AND MAINTENANCE

General

General: For the duration of the defects liability period, provide inspections and maintenance of safety measures required by the following:

- The Building Code of Australia.
- AS 1851.
- Other statutory requirements applicable to the work.

Records: Provide mandatory records.

Certification: Certify that mandatory inspections and maintenance have been carried out and that the respective items comply with statutory requirements. Submit certification.

Annual inspection: Provide an annual inspection and maintenance immediately prior to the end of the defects liability period.

3.13 OPERATION AND MAINTENANCE MANUALS

General

General: Submit operation and maintenance manuals for installations.

Authors and compilers: Personnel experienced in the maintenance and operation of equipment and systems installed, and with editorial ability.

Referenced documents: If referenced documents or technical worksections require that manuals be submitted, include corresponding material in the operation and maintenance manuals.

Subdivision: By installation or system, depending on project size.

Date for draft submission: 2 weeks prior to commencement of training.

Date for final submission: Within 2 weeks after practical completion.

Contents

General: Include the following:

- Certificates:
  . Certificates from authorities.
  . Copies of manufacturers' warranties.
  . Product certification.
- Directory: Names, addresses, and telephone and facsimile numbers of principal consultant, subconsultants, contractor, subcontractors and names of responsible parties.
- Drawings:
  . Record drawings, full size.
- Drawings and technical data: As necessary for the efficient operation and maintenance of the installation.
- Equipment descriptions:
  . Name, address and telephone and facsimile numbers of the manufacturer and supplier of items of equipment installed, together with catalogue list numbers.
  . Schedules (system by system) of equipment, stating locations, duties, performance figures and dates of manufacture. Provide a unique code number cross-referenced to the record and diagrammatic drawings and schedules, including spare parts schedule, for each item of equipment installed.
- Maintenance procedures:
  . Detailed recommendations for preventative maintenance frequency and procedures.
  . Manufacturer's technical literature as appropriate. Register with manufacturer as necessary. Retain copies delivered with equipment.
  . Safe trouble-shooting, disassembly, repair and reassembly, cleaning, alignment and adjustment, balancing and checking procedures. Provide logical step-by-step sequence of instructions for each procedure.
  . Schedule of spares recommended to be held on site, being those items subject to wear or deterioration and which may involve the principal in extended deliveries when replacements are required. Include complete nomenclature and model numbers, and local sources of supply.
- Operation procedures:
  . Manufacturers' technical literature as appropriate.
- Table of contents: For each volume. Title to match cover.
- Installation description: General description of the installation.
- Systems descriptions: Technical description of the systems installed, written to ensure that the principal's staff fully understand the scope and facilities provided. Identify function, normal operating characteristics, and limiting conditions.
- Systems performance: Technical description of the mode of operation of the systems installed.
- Equipment descriptions:
  . Manufacturers' technical literature for equipment installed, assembled specifically for the project, excluding irrelevant matter. Mark each product data sheet to clearly identify specific products and component parts used in the installation, and data applicable to the installation.
  . Supplements to product data to illustrate relations of component parts. Include typed text as necessary.
- Operation procedures:
  . Safe starting up, running in, operating and shutting down procedures for systems installed. Include logical step-by-step sequence of instructions for each procedure.

. Control sequences and flow diagrams for systems installed.
. Legend for colour-coded services.
. Schedules of fixed and variable equipment settings established during commissioning and maintenance.

- Maintenance procedures:
  . Schedule of normal consumable items, local sources of supply, and expected replacement intervals up to a running time of 40 000 hours. Include lubricant and lubrication schedules for equipment.
  . Instructions for use of tools and testing equipment.
  . Emergency procedures, including telephone numbers for emergency services, and procedures for fault finding.
  . Material safety data sheets (MSDS).
- Maintenance records:
  . Documentation to AS 1851 clause 18.2.5.
- Certificates:
  . Copies of test certificates for the installation and equipment used in the installation.
  . Test reports.
- Drawings:
  . Single line diagrams.
  . Service route layouts.
  . Switchgear and controlgear assembly circuit schedules including electrical service characteristics, controls and communications.

Format – electronic copies

Printing: Provide material that can be legibly printed on A4 size paper.

Scope: Provide the same material as documented for hardcopy in electronic format.

Quantity and format: Refer to **Electronic submissions.**

Format – hard copy

General: A4 size loose leaf, in commercial quality, 4 ring binders with hard covers, each indexed, divided and titled. Include the following features:

- Cover: Identify each binder with typed or printed title '*OPERATION AND MAINTENANCE MANUAL*', to spine. Identify title of project, volume number, volume subject matter, and date of issue.
- Dividers: Durable divider for each separate element, with typed description of system and major equipment components. Clearly print short titles under laminated plastic tabs.
- Drawings: Fold drawings to A4 size and accommodate them in the binders so that they may be unfolded without being detached from the rings. Provide with reinforced punched binder tabs.
- Pagination: Number pages.
- Ring size: 50 mm maximum, with compressor bars.
- Text: Manufacturers' printed data, including associated diagrams, or typewritten, single-sided on bond paper, in clear concise English.

Number of copies: 3.

3.14 RECORD DRAWINGS

General

General: Submit record drawings. Show the 'as installed' locations of building elements, plant and equipment. Include 'as installed' amendments to shop drawings. Show off-the-grid dimensions where applicable.

Date for submission: Within 2 weeks after practical completion.

Content: Show dimensions, types and location of the services in relation to permanent site features and other underground services. Show the spatial relationship to building structure and other services. Include all changes made during commissioning and the maintenance period.

Drawings: Include all documented shop drawings.

Extensions and/or changes to existing: If a drawing shows extensions and/or alterations to existing installations, include sufficient of the existing installation to make the drawing comprehensible without reference to drawings of the original installation.

Accuracy

Documents: Incorporate all modifications made during the progress of the work and testing period. Show any provisions for the future.

Endorsement: Sign and date all record drawings. Keep one set of shop drawings on site at all times expressly for the purpose of marking changes made during the progress of the works.

Drawing layout

General: Use the same borders and title block as the contract drawings.

Quantity and format

General: Refer to **Submissions**.

3.15 TOOLS AND SPARE PARTS

Tools and spare parts schedule

General: At least 8 weeks before the date for practical completion, submit a schedule of tools, portable instruments and spare parts necessary for maintenance of the installation. For each item state the recommended quantity and the manufacturer's current price. Include the following in the prices:

- Checking receipt, marking and numbering in accordance with the spare parts schedule.
- Packaging and delivery to site.
- Painting, greasing and packing to prevent deterioration during storage.
- Referencing equipment schedules in the operation and maintenance manuals.
- Suitable means of identifying, storing and securing the tools and instruments. Include instructions for use.

Spares

General: Provide spare parts listed in the appropriate worksections.

Replacement: Replace spare parts consumed during the maintenance period.

3.16 COMMISSIONING

Circuit protection

General: Confirm that circuit protective devices are sized and adjusted to protect installed circuits.

Controls

General: Calibrate, set and adjust control instruments, control systems and safety controls.

Notice

General: Give notice for inspection to be made of the commissioning of the installation.

Reports

General: Submit reports indicating observations and results of tests and compliance or non-compliance with requirements.

3.17 CLEANING

General

General: Before practical completion, clean throughout, including all exterior and interior surfaces except those totally and permanently concealed from view.

Practical completion: At practical completion, clean the following:

- Insides of switchgear and controlgear assemblies.
- Luminaires.
- Switchgear and contactors, and other electrical contacts. Adjust as necessary.

Labels: Remove all labels not required for maintenance.

3.18 COMPLETION

Samples

General: Remove unincorporated samples on completion.

Warranties

General: If a warranty is documented or if a manufacturer's standard warranty extends beyond the end of the defects liability period, name the principal as warrantee. Register with manufacturers as necessary. Retain copies delivered with components and equipment.

Commencement: Commence warranty periods at practical completion or at acceptance of installation, if acceptance is not concurrent with practical completion.

Approval of installer: If installation is not by manufacturer, and product warranty is conditional on the manufacturer's approval of the installer, submit the manufacturer's written approval of the installing firm.

3.19 COMPLETION TESTS

General

General: Test the works under the contract to demonstrate compliance with the specified performance requirements.

Functional checks

General: Carry out functional and operational checks on energised equipment and circuits and make adjustments for the correct operation of safety devices.

Proprietary equipment

General: Submit type test reports confirming compliance of proprietary equipment.

Sound pressure level measurements

Correction for background noise: To AS/NZS 2107 Table B1.

External: To AS 1055.1.

Internal: To AS/NZS 2107.

Measurement positions: If a test position is designated only by reference to a room or space, do not take measurements less than 1 m from the floor, ground or walls.

Sound pressure level analysis: Measure the sound pressure level and the background sound pressure level over the full range of octave band centre frequencies from 31.5 Hz to 8 kHz at the designated positions.

Sound pressure levels: Measure the A-weighted sound pressure levels and the A-weighted background sound pressure levels at the designated positions.

Test instruments

General: Use instruments calibrated by a registered testing authority.

3.20 TRAINING

General

Duration: Instruction to be available for the whole of the commissioning and running-in periods.

Format: Conduct training at agreed times, at system or equipment location. Also provide seminar instruction to cover all major components.

Operation and maintenance manuals: Use items and procedures listed in the final draft operation and maintenance manuals as the basis for instruction. Review contents in detail with the principal's staff.

Certification: Provide written certification of attendance and participation in training for each attendee. Provide register of certificates issued.

Demonstrators

General: Use only qualified manufacturer's representatives who are knowledgeable about the installations.

Maintenance

General: Explain and demonstrate to the principal's staff the purpose, function and maintenance of the installations.

Operation

General: Explain and demonstrate to the principal's staff the purpose, function and operation of the installations.

3.21 MAINTENANCE

General

General: During the maintenance and defects liability periods, carry out periodic inspections and maintenance work as recommended by manufacturers of supplied equipment, and promptly rectify faults.

Emergencies: Attend emergency calls promptly.

Maintenance program
General: Submit details of maintenance procedures and program, relating to installed plant and equipment, 6 weeks before the date for practical completion. Indicate dates of service visits. State contact telephone numbers of service operators and describe arrangements for emergency calls.

Maintenance records
General: Submit, in binders which match the manuals, loose leaf log book pages designed for recording completion activities including operational and maintenance procedures, materials used, test results, comments for future maintenance actions and notes covering the condition of the installation. Include completed log book pages recording the operational and maintenance activities performed up to the time of practical completion.

Certificates: Include test and approval certificates.

Certification: On satisfactory completion of the installation, submit certificates stating that each installation is operating correctly.

Number of pages: The greater of 100 pages or enough pages for the maintenance period and a further 12 months.

Referenced documents: If referenced documents or technical worksection s require that log books or records be submitted, include this material in the maintenance records.

Service visits: Record comments on the functioning of the systems, work carried out, items requiring corrective action, adjustments made and name of service operator. Obtain the signature of the principal's designated representative.

Site control
General: Report to the principal's designated representative on arriving at and before leaving the site.

0181 ADHESIVES, SEALANTS AND FASTENERS

1 GENERAL

1.1 CROSS REFERENCES

General
General: Conform to the *General requirements* worksection.

1.2 SUBMISSIONS

Installed sealant tests
Sampling: For each sealant test take 3 samples of installed and cured sealant, each at least 50 mm long, from completed joints.

Testing: Submit the results of tests to the **Installed sealant tests schedule**.

Reinstatement: Make good the joints from which the samples were taken.

Sealants
Samples: Submit colour samples of visible joint sealants.

Documents: Submit technical data sheets.

1.3 INSPECTION

Notice
Inspection: Give notice so that inspection may be made of joints and penetrations prepared for the application of sealants to the **Installed sealant tests schedule**.

1.4 PERFORMANCE

Adhesives and sealants
General: Provide adhesives and sealants capable of transmitting imposed loads, sufficient to ensure the rigidity of the assembly, or integrity of the joint and which will not cause discolouration of finished surfaces.

Compatibility: Do not use sealants or adhesives that are incompatible with the products to which they are applied.

Movement: Where an adhered or sealed joint may be subject to movement, select a system accredited to accommodate the projected movement under the conditions of service.

Refurbishment: Use sealants that can be safely removed and prepared for refurbishment.

Fasteners
Provide fasteners accredited for the particular use, capable of transmitting imposed loads and maintaining the rigidity of the assembly.

2 PRODUCTS

2.1 ADHESIVES

Standards
Mastic adhesive: To AS 2329.

Polymer emulsion adhesive for timber: To AS 2754.2, not inferior to Type 3.

High strength adhesive tape

General description: A foam of cross linked polyethylene or closed cell acrylic coated both sides with a high performance acrylic adhesive system, encased in release liners of paper or polyester.

Product classification: Ensure product suitability for the following substrates:

- Firm high strength foam tapes for high energy surfaces including most bare metals such as stainless steel and aluminium.
- Conformable high strength foam for medium energy surfaces including many plastics and paints, and bare metals.
- Conformable high strength foam for lower energy surfaces including many plastics, most paints and powder coatings, and bare metals.

Thickness: Select the tape to ensure a mismatch between surfaces does not exceed half the tape thickness under the applied lamination pressure.

2.2 SEALANTS

Standards

General: To ISO 11600.

External masonry joints

General: Provide sealant and bond breaking backing materials compatible with each other and the substrate and which are non-staining to masonry. Do not use bituminous materials with absorbent masonry units.

Bond breaking backing:

- Bond breaking materials: Non-adhesive to sealant, or faced with a non-adhering material.
- Foamed materials: Closed-cell or impregnated, not water-absorbing.

Fire rated control joints

General: Provide sealant materials that maintain the nominated fire resistant rating.

- Fire stopping: To AS 4072.1.

Pointing and bedding

General: Provide sealants for fast moving joints in light weight building elements that are compatible with the contact materials.

Bond breaking backing:

- Bond breaking materials: Non-adhesive to sealant, or faced with a non-adhering material.
- Foamed materials: Closed-cell or impregnated, not water-absorbing.

Floor movement joints

General: Provide trafficable sealants for that are compatible with the contact materials.

Bond breaking backing:

- Bond breaking materials: Non-adhesive to sealant, or faced with a non-adhering material.
- Foamed materials: Closed-cell or impregnated, not water-absorbing.

2.3 FASTENERS

General

Masonry anchors: Proprietary expansion or chemical type.

Plain washers: To AS 1237.1.

- Provide washers to the heads and nuts of bolts, and the nuts of coach bolts.

Plugs: Proprietary purpose-made plastic.

Powder-actuated fasteners: To AS/NZS 1873.4.

Stainless steel fasteners: To ASTM A240/240M.

Steel nails: To AS 2334.

- Length: At least 2.5 x the thickness of the member being secured, and at least 4 x the thickness if the member is plywood or building board < 10 mm thick.

Unified hexagon bolts, screws and nuts: To AS/NZS 2465.

Fasteners in CCA treated timber: Epoxy coated or stainless steel.

Bolts

Coach bolts: To AS/NZS 1390.

Hexagon bolts Grades A and B: To AS 1110.1.

Hexagon bolts Grade C: To AS 1111.1.

Corrosion resistance

Corrosivity category: To the *General requirements* worksection.

Steel products: Conform to the **Corrosion resistance table** or provide proprietary products with metallic and/or organic coatings of equivalent corrosion resistance.

Corrosion resistance table – low corrosivity category

Situation	Self drilling screws to AS 3566.2Class	Threaded fasteners and anchors		Powder actuated fasteners	
		Material	Minimum local metallic coating thickness (μm)	Material grade	Minimum local metallic coating thickness (μm)
Internal	1	Electroplated zinc	4	Electroplated zinc	4
External	3	Electroplated zinc or Hot-dip galvanized	30	Stainless steel 316	

Corrosion resistance table – medium corrosivity category

Situation	Self drilling screws to AS 3566.2 Class	Threaded fasteners and anchors		Powder actuated fasteners	
		Material	Minimum local metallic coating thickness (μm)	Material grade	Minimum local metallic coating thickness (μm)

Situation	Self drilling screws to AS 3566.2 Class	Threaded fasteners and anchors		Powder actuated fasteners	
		Material	Minimum local metallic coating thickness (μm)	Material grade	Minimum local metallic coating thickness (μm)
Internal	2	Electroplated zinc	12	Electroplated zinc	12
External	4	Hot-dip galvanized	50	Stainless steel 316	

Corrosion resistance table – high corrosivity category

Situation	Self drilling screws to AS 3566.2 Class	Threaded fasteners and anchors		Powder actuated fasteners	
		Material	Minimum local metallic coating thickness (μm)	Material grade	Minimum local metallic coating thickness (μm)
Internal	3	Electroplated zinc or Hot-dip galvanized	30	Stainless steel 316	
External	Stainless steel 316	Stainless steel 316		Stainless steel 316	

Finishes

Electroplating:

- Metric thread: To AS 1897.
- Imperial thread: To AS 4397.

Galvanizing:

- Threaded fasteners: To AS 1214.
- Other fasteners: To AS/NZS 4680.

Mild steel fasteners: Galvanize if:

- Embedded in masonry.
- In external timbers.
- In contact with chemically treated timber, other than CCA treated timber.

Epoxy coated:

- CCA Treated timber.

Nuts

Hexagon chamfered thin nuts Grades A and B: To AS 1112.4.

Hexagon nuts Grade C: To AS 1112.3.

Hexagon nuts Style 1 Grades A and B: To AS 1112.1.

Hexagon nuts Style 2 Grades A and B: To AS 1112.2.

Screws

Coach screws: To AS/NZS 1393.

Hexagon screws Grades A and B: To AS 1110.2.

Hexagon screws: Grade C To AS 1111.2.

Hexagon socket screws: To AS 1420 and AS/NZS 1421.

Machine screws: To AS/NZS 1427.

Self-drilling screws: To AS 3566.1 and AS 3566.2.

Self-tapping screws:

- Crossed recessed countersunk (flat – common head style): To AS/NZS 4407.
- Crossed recessed pan: To AS/NZS 4406.
- Crossed recessed raised countersunk (oval): To AS/NZS 4408.
- Hexagon: To AS/NZS 4402.
- Hexagon flange: To AS/NZS 4410.
- Hexagon washer: To AS/NZS 4409.
- Slotted countersunk (flat – common head style): To AS/NZS 4404.
- Slotted pan: To AS/NZS 4403.
- Slotted raised countersunk (oval – common head style): To AS/NZS 4405.

Blind rivets

Description: Expanding end type with snap mandril.

Type: Closed end for external application, open end for internal application.

End material:

- Aluminium base alloy for metallic coated or colourbond coated steel.
- Stainless steel for stainless steel sheet.
- Copper for copper sheet.

Size:

- For sheet metal to sheet metal: 3 mm.
- For sheet metal to supports, brackets and rolled steel angles: 4.8 mm.

Performance

Loads: Provide fasteners capable of transmitting the loads imposed, and sufficient to ensure the rigidity of the assembly.

3 EXECUTION

3.1 ADHESIVES

Preparation

Substrates: Ensure substrates are:

- Clean and free of any deposit or finish which may impair adhesion.
- If framed or discontinuous, support members are in full lengths without splicing.
- If solid or continuous, excessive projections are removed.
- If previously painted, cracked or flaking paint is removed and the surface lightly sanded.

Contact adhesive

Precautions: Do not use if:

- A substrate is polystyrene foam.
- A PVC substrate may allow plasticiser migration.
- The adhesive solvent can discolour the finished surface.

- Dispersal of the adhesive solvent is impaired.

Two way method: Immediately after application press firmly to transfer adhesive and then pull both surfaces apart. Allow to tack off and then reposition and press firmly together. Tap areas in contact with a hammer and padded block.

One way method: Immediately after application bring substrates together and maintain maximum surface contact for 24 hours by clamps, nails or screws as appropriate. If highly stressed employ permanent mechanical fasteners.

High strength adhesive tape

Preparation:

- Non-porous surfaces: Clean with surface cleaning solvents such as isopropyl alcohol / water, wash down and allow to dry.
- Porous surfaces: Prime the surface with a contact adhesive compatible with the tape adhesive system.

Follow the recommendations of the manufacturer for application to the following: Copper, brass, plasticized vinyl and hydrophilic surfaces such as glass and ceramics in a high humidity environment.

Applied lamination pressure: Ensure the tape experiences 100 kPa.

Application temperature: Generally above 10°C, consult the manufacturer.

Completion: Do not apply loads to the assembly for 72 hours at 21°C.

3.2 SEALANT JOINTING

Preparation for jointing

Cleaning: Cut flush joint surface protrusions and make good. Mechanically clean joint surfaces free of any deposit or finish which may impair adhesion of the sealant. Immediately before jointing remove loose particles from the joint, using oil-free compressed air.

Bond breaking: Install bond breaking backing material.

Taping: Protect the surface on each side of the joint using 50 mm wide masking tape or equivalent means. On completion of pointing remove the tape and remove any stains or marks from the surface.

Primer: Apply the recommended primer to the surfaces in contact with sealant materials.

Sealant joint proportions

General weatherproofing joints (width:depth):

- 1:1 for joint widths < 12 mm.
- 2:1 for joint widths > 12 mm.

Sealant application

General: Apply the sealant to dry joint surfaces using a pneumatic applicator gun. Ensure the sealant completely fills the joint to the required depth; that it is in good contact with the full depth of the sides and that there is no air trapped in the joint. Do not apply the sealant outside the recommended working time for the material or the primer.

Weather conditions

Two pack polyurethanes: Do not apply the sealant if ambient conditions are outside the following:

- Temperature: < 5°C or > 40°C.
- Humidity: To the manufacturer's recommendations.

Joint finish

General: Force the sealant into the joint and finish with a smooth, slightly concave surface using a tool designed for the purpose.

Protection

General: Protect the joint from inclement weather during the setting or curing period of the material.

0182 FIRE-STOPPING

1 GENERAL

1.1 CROSS REFERENCES

General
General: Conform to the General requirements worksection.

1.2 GENERAL STANDARDS

General
Service penetration fire-stopping systems: To BCA clause C3.15.

Control joint fire-stopping systems: To AS 4072.1.

1.3 INSPECTION

Notice
Inspection: Give sufficient notice so that inspection may be made of the following:

- Service penetrations completed and ready for fire-stopping.
- Finished fire-stopping, before being concealed.

1.4 TESTS

Service penetration fire-stopping systems
Insulation measurements: Required.

Multiple penetration fire-stopping systems
Insulation measurements: Required.

1.5 SAMPLES

Sample panels
General: Supply a sample panel of each fire-stopping assembly, on representative substrates. If built into the works, mark them.

Size: 500 mm run for junction seals and 500 x 500 mm area for penetration seals.

1.6 SUBMISSIONS

Manufacturers' information
Type tests: Submit type test certificates for each combination of fire-stopping system, application, type of service, substrate and penetration orientation. Include drawings of tested details.

- Physical performance: Submit report to AS 4072.1 Appendix C.

Product data: Submit evidence that systems specified without reference to brand conform to specified requirements.

Instructions: Submit copies of relevant manufacturers' instructions, for systems specified without reference to brand.

Material safety data sheets (MSDS): Submit MSDS for systems specified without reference to brand.

Notice
General: Give notice if substrates or penetrants or both are not suitable for fire-stopping.

2 PRODUCTS

2.1 MATERIALS

General
Shelf life: Ensure materials used have not exceeded their shelf life.

Toxic materials: Free of asbestos and lead and free of, nor requiring the use of, toxic solvents.

Toxicity in fire: Non-toxic.

Fire-stop mortars
Type: Re-enterable cement-based compound, mixed with water. Non-shrinking, moisture resistant. Insoluble in water after setting.

Formulated compound of incombustible fibres
Material: Formulated compound mixed with mineral fibres, non-shrinking, moisture resistant. Insoluble in water after setting.

Fibre stuffing
Material: Mineral fibre stuffing insulation, dry and free of other contaminants.

Standard: AS/NZS 4859.1 Section 8.

Fire-stop sealants
Material: Elastomeric sealant. Soft, permanently flexible, non-sag, non-shrinking, moisture resistant. Capable of providing a smoke-tight, gas-tight and waterproof seal when properly installed. Insoluble in water after setting.

Fire-stop foams
Material: Single component compound of reactive foam ingredients, non-shrinking, moisture resistant. Insoluble in water after setting.

Fire-stop putty
Material: Single component, mouldable, permanently flexible, non-shrinking, moisture resistant, intumescent compound which expands on exposure to surface heat gain, forming a high-volume thermally insulating char that closes gaps and voids, resists the turbulence of a severe fire. Capable of being placed by hand to form an immediate fire seal. Insoluble in water after setting.

2.2 COMPONENTS

Fire-stop collars
Material: Mechanical device with incombustible intumescent fillers covered with sheet steel jacket. Airtight and watertight.

Fire-stop pillows
Material: Formed self-contained compressible flexible mineral fibre in cloth bags, rated to permit frequent changes in service.

3 EXECUTION

3.1 EXECUTION GENERALLY

General
Extent: Fire-stop and smoke-stop interruptions to fire-rated assemblies, materials and components, including penetrations through fire-rated elements, breaks within fire-rated elements (e.g. expansion joints), and junctions between fire-rated elements.

The **Fire-stopping systems schedule** is not necessarily comprehensive.

Sequence: Fire-stop after services have been installed through penetrations and properly spaced and supported, after sleeving where appropriate, and after removal of temporary lines, but before restricting access to the penetrations, including before dry lining.

Ventilation: Supply ventilation for non-aqueous solvent-cured materials.

Density: Apply fire-stopping material to uniform density.

Fire-stopping exposed to view: Finish surfaces to a uniform and level condition.

Cable separation: Maintain.

Protection: Protect adjacent surfaces from damage arising through installation of fire-stopping. Protect completed fire-stopping from damage arising from other work.

Loose or damaged fire-stopping material: Remove and replace.

Penetrations by pipes and ducts: Allow for thermal movement of the pipes and ducts.

Preventing displacement: Reinforce or support fire-stopping materials with non-combustible materials when:

- The unsupported span of the fire-stopping materials > 100 mm.
- The fire-stopping materials are non-rigid (unless shown to be satisfactory by test).

Large openings: Provide fire-stopping capable of supporting the same loads as the surrounding element or provide similar structural support around the opening.

Preparation

Cleaning: Clean substrates of dirt, dust, grease, oil, loose material, and other matter which may affect bond of fire-stop material.

Primer: Clean and dry substrates for primers and sealants.

Restraint: Install backing and/or damming materials to arrest liquid material leakage. Remove temporary dams after material has cured.

3.2 SYSTEMS

Fire-stop mortars

Ambient conditions: Do not install below 5°C.

Fibre stuffing

Installation: Compress to 40% of its uncompressed volume.

Fire-stop sealants

Ambient conditions: Do not store above 32°C. Do not install outside the temperature range recommended by the sealant manufacturer. Do not install when humidity exceeds that recommended by the sealant manufacturer for safe installation.

Fire-stop foams

Ambient conditions: Do not store above 32°C. Do not install below 15°C or above 32°C. Do not apply when temperature of substrate and air is below 15°C. Maintain this minimum temperature before, during and for 3 days after installation.

Installation: Test substrates for adhesion and prime if necessary. Place in layers to ensure homogenous density, filling cavities and spaces. Place sealant to completely seal junctions with adjacent dissimilar materials.

Fire-stop pillows

Ambient conditions: Do not install in conditions outside of the manufacturer's recommendations.

Labelling

Label each fire-stopping installation with a permanently fixed tag or sticker containing the following information:

- Manufacturer's name.
- Name and address of installer.
- Date of installation.

3.3 COMPLETION SUBMISSIONS

Certification

General: Submit evidence of compliance, in accordance with the recommendations of AS 4072.1 Appendix B.

Certification: Submit a completed certification document for installed fire-stopped penetrations and control joints.

- Form: To Figure B1 of AS 4072.1.

Schedule: Submit a schedule of installed fire-stopped penetrations and control joints.

- Form: To Figure B2 of AS 4072.1.

User manual

For fire-stopping systems which are intended to be modified in service, submit user manual.

3.4 MAINTENANCE

Cleaning

Remove spilled and excess fire-stopping materials without damaging other work.

0183 METALS AND PREFINISHES

1 GENERAL

1.1 CROSS REFERENCES

General
General: Conform to the *General requirements* worksection.

2 PRODUCTS

2.1 METALS

Aluminium and aluminium alloys
Drawn pipe: To AS/NZS 1867.

Drawn rod, bar and strip: To AS/NZS 1865.

Extrusions: To AS/NZS 1866.

Plate and sheets: To AS/NZS 1734.

Coated steel
Electrogalvanizing ferrous hollow and open sections: To AS 4750.

Metallic-coated steel:

- Ferrous open sections zinc coated by an in-line process: To AS/NZS 4791.
- Ferrous hollow sections zinc coated by a continuous or specialised process: To AS/NZS 4792.

Metallic-coated steel sheet: To AS 1397. Metal thicknesses specified are base metal thicknesses.

Steel wire: To AS/NZS 4534.

Copper and copper alloys
Casting: To AS 1565.

Plate, sheet and strip: To AS 1566.

Rods, bars and sections: To AS/NZS 1567.

Stainless steel
Bars: To ASTM A276.

Plate, sheet and strip: To ASTM A240/A240M.

Welded pipe (round): To AS 1769.

Welded pipe (square): To ASTM A554.

Steel
Sheet: To AS/NZS 1595.

Structural bars and sections: To AS/NZS 3679.1.

Structural hollow section: To AS 1163.

Steel for prefinishes
Cold rolled bar: To AS 1443 ‘bright’.

Cold rolled sheet: To AS/NZS 1595.

- Designation: CA2S-E.

Electric resistance welded pipe: To AS 1450.

3 EXECUTION

3.1 GENERAL

Metal separation
Incompatible sheet metals: Provide separation by one of the following:

- Apply an anti-corrosion low moisture transmission coating such as alkyd zinc phosphate primer or aluminium pigmented bituminous paint to contact surfaces.
- Insert a concealed separation layer such as polyethylene film, adhesive tape, or bituminous felt.

Incompatible fixings: Do not use.

Incompatible service pipes: Install lagging or grommets. Do not use absorbent, fibrous of paper products.

Brazing
General: Ensure brazed joints have sufficient lap to provide a mechanically sound joint.

Butt joints: Do not use butt jointing for joints subject to load. If butt joints are used, do not rely on the filler metal fillet only.

Filler metal: To AS/NZS 1167.1.

Finishing
Visible joints: Finish visible joints made by welding, brazing or soldering using methods appropriate to the class of work (including grinding or buffing) before further treatment such as painting, galvanizing or electroplating. Ensure self-finished metals are without surface colour variations after jointing.

Preparation
General: Before applying decorative or protective prefinishes to metal components, complete welding, cutting, drilling and other fabrication, and prepare the surface using a suitable method.

Standard: To AS 1627.

Priming steel surfaces: If site painting is specified to otherwise uncoated mild steel or similar surfaces:

- Prime after fabrication and before delivery to the works.
- After installation, repair damaged priming and complete the coverage to unprimed surfaces.

Welding
Aluminium: To AS 1665.

Stainless steel: To AS/NZS 1554.6.

Steel: To AS/NZS 1554.1.

3.2 SELF FINISHING

Mechanical finishes
Bright finished copper alloy surfaces: For indoor applications, apply a clear lacquer protecting coating.

3.3 ELECTROPLATING

Electroplated coatings
Chromium on metals: To AS 1192.

Nickel on metals: To AS 1192.

Service condition number: At least 2.

Zinc on iron or steel: To AS 1789.

3.4 ANODISING

Anodising

Standard: To AS 1231.

Thickness grade:

- Indoor applications: At least AA 10.
- Outdoor applications: AA 15 to AA 20.

3.5 METAL SPRAYING

Metal spray

Standard: To ISO 2063.

Minimum thicknesses:

- Indoor applications: 125 μm.
- Outdoor applications: 175 μm.

Process: Electric arc.

Seal coat: Cover the metal spray finish with two coats of vinyl seal to a total dry film thickness of 80 μm.

3.6 POWDER COATING

Standards

Application to aluminium and aluminium alloy substrates: AS 3715.

Application to substrates other than aluminium: AS 4506.

Preparation

General: Use chemical pretreatments. If recommended, provide conversion coatings.

Aluminium: Pretreat to AS 3715 Appendix G.

Galvanized and metallic-coated steel: Clean by immersing in a suitable alkaline or acidic solution, apply a zinc phosphate chemical conversion coating, rinse and degas.

Unprotected steel: Remove rust to the recommendations of AS 1627.4 to grade Sa 2½ of AS 1627.9. Clean by immersing in trichloroethylene or an alkaline solution, and apply a coat of iron phosphate.

Thermoset powder coating generally

Pre-clean: If surface contamination has occurred or is suspected, clean surface with a proprietary pre-cleaning solvent/detergent prior to powder application.

Thermoset fluopolymer coating: Provide chemical conversion of the surface to amorphous chromium phosphate to ASTM 1730D Type B, Method 5 (Amorphous chromium phosphate treatment). Delete if fluoropolymer is not applicable.

Application: Use an electrostatic spray gun or fluidised bed and ensure no dust particles or other impurities blemish the final product.

Baking: After application, bake the film in an oven accurately controlled to the temperature and for the period recommended by the coating system manufacturer. Check for correct paint cure by solvent testing. Adjust pre-heat and line speed to ensure full cure.

Damage: Protect the coatings from damage during coating operations, fabrication shipping, storage and installation.

Minor damage: Touch up as recommended by coating system manufacturer.

Thermoset polyester powder coating

Standards:

- Aluminium and aluminium alloy substrates: To AS 3715.
- Metal substrates other than aluminium: To AS 4506.

Thermoset fluoropolymer coating

Description: Factory applied spray coatings on aluminium products, including PVF_2 and PFTE coatings.

Standard: To AS 3715.

Quality control: Submit an ongoing application and performance quality control report. Include production methods and tests to the **Quality control table** using actual substrates for this project:

3.7 PREPAINTING

Air-drying enamel

Application: Spray or brush.

Finish: Full gloss.

General use:

- Primer: Two-pack epoxy primer to AS/NZS 3750.13.
- Top coats: 2 coats to AS 3730.6.

Oil resistant use:

- Primer: Two-pack epoxy primer to AS/NZS 3750.13.
- Top coats: 2 coats to AS 4025.1.

Equipment paint system

Description: Brush or spray application using paint as follows:

- Full gloss enamel finish coats, oil and petrol resistant: AS 4025.1, two coats.
- Prime coat to metal surfaces generally: AS 4089 or AS 4025.4.
- Prime coat to zinc-coated steel: AS 3730.15.
- Undercoat: AS 4025.2.

Prepainted metal products

Product type as noted in AS/NZS 2728: Not lower than the type appropriate to the field of application.

Two-pack liquid coating

Application: Spray.

Finish: Full gloss.

Primer: Two pack epoxy primer to AS/NZS 3750.13.

Topcoat:

- Internal use: Proprietary polyurethane or epoxy acrylic system.
- External use: Proprietary polyurethane system.

3.8 COMPLETION

Damage

General: If prefinishes are damaged, including damage caused by unauthorised site cutting or drilling, remove and replace the damaged item.

Repair

General: If a repair is required to metallic coated sheet or electrogalvanized on inline galvanized steel products, clean the affected area and apply a two-pack organic primer to AS/NZS 3750.9.

0186 BUILDING IT COMPONENTS

1 GENERAL

1.1 AIMS

Responsibilities

General: Provide IT components and systems as follows.

Selections: As documented.

1.2 CROSS REFERENCES

General

General: Conform to the *General requirements* worksection.

1.3 SUBMISSIONS

Technical data

General: Submit technical data for all components including the following:

- Hardware and software manufacturer's technical literature.

2 PRODUCTS

2.1 ACTIVE COMPUTER HARDWARE

Computer hardware

Conform to the **Computer hardware schedule**.

Network hub/switch

Type: Managed Gigabit ethernet Layer 2.

Mounting: Rack mounting.

Network router

Type: Gigabit ethernet.

Functions: Static IP, dynamic IP, integrated DHCP, PPPoE, and device name support.

Mounting: Rack mounting.

Wireless access point

Compatibility: IEEE 802.11b and IEEE 802.11g.

Modes: Wireless access point, point-to-point bridge, point-to-multi-point wireless bridge, wireless client and wireless repeater.

ADSL modem

Graphical User Interface (GUI): Required to permit modification of settings to connect to Internet Service Provider (ISP).

Functions: Static IP, Dynamic IP, PPPoE/PPPoA and Bridge connections.

Coaxial cable modem

Graphical User Interface (GUI): Required to permit modification of settings to connect to Internet Service Provider (ISP).

Functions: Static IP, Dynamic IP, PPPoE/PPPoA and Bridge connections.

Backup/archive facilities

Type: Tape.

Mounting: Rack mounting.

Printers

General: Conform to the **Printers schedule**.

2.2 SOFTWARE

General

General: Provide the software required for the operation and management of the building IT systems and equipment including the following:

- All passwords, access codes and other means used to limit or control access to, or modification (including extension) of, the software.
- All software and manuals necessary to modify or extend the software.
- Back-up copies of software in electronic format.
- Installation of all software updates issued before the end of the defects liability period.

Compatibility: Provide software systems that are planned to have upgrades backward compatible, so that each upgrade does not require user input or changes to base data or to the site specific installation.

Licence: Provide fully licensed versions of all software and licenses for all users defined in the documents.

OSI model: Provide software that operates on the open system interconnection (OSI) model.

System software

Conform to the **System software schedule**.

Application software

Provide the software required for the operation and management of building services systems and equipment including the following:

- Absolute right and all necessary facilities for the principal to modify extend or reduce any or all functions, hardware and software that form part of the system.
- Full listings of all software supplied which has been developed, modified or adapted to meet the requirements of this project.

Function: Provide software that delivers accurate and reliable results.

Modular construction: Software programs must be constructed in modules to facilitate ease of maintenance and to reduce the delays in program execution.

Pre delivery tests

General: Verify that the software has been assembled and tested for operational performance prior to installation on site.

High level interface test: Where a high level interface to other systems is specified, test and verify software performance with the specified systems prior to installation on site.

3 EXECUTION

3.1 INSTALLATION

Network integration

General: Integrate the equipment into the network operating system.

Software integration

General: Integrate the software into the system and applications software.

3.2 COMPLETION

Completion tests

Completion: Verify the functional and operational performance of the software prior to completion.

Disaster recovery: Verify that the software recovers from disaster events without loss of data and without loss of reliability.

Reliability: Verify that the software system provides reliable reporting and results through alternative measurement methods.

0201 DEMOLITION

1 GENERAL

1.1 CROSS REFERENCES

General
General: Conform to the *General requirements* worksection.

1.2 STANDARD

General
Demolition: To AS 2601.

1.3 INTERPRETATION

Definitions
For the purposes of this worksection, the following definitions apply:

- Demolition: The complete or partial dismantling of a building or structure, by pre-planned and controlled methods or procedures.
- Dilapidation record: The photographic or video and written record made before commencement of demolition work of the condition of the portion of the existing building being retained, adjacent buildings, and other relevant structures or facilities.
- Dismantle: The reduction of an item to its components in a manner to allow re-assembly.
- Recover: The disconnection and removal of an item in a manner to allow re-installation.

1.4 INSPECTION

Notice
Inspection: Give notice so that inspection may be made of the following:

- Adjacent structures before commencement of demolition.
- Services before disconnection or diversion.
- Trees as documented to be retained, before commencement of demolition.
- Contents of building before commencement of demolition.
- Structure after stripping and removal of roof coverings and external cladding.
- Underground structures after demolition above them.
- Excavations remaining after removal of underground work.
- Site after removal of demolished materials.
- Services after reconnection or diversion.

1.5 SUBMISSIONS

Authorities
Evidence of compliance: Before commencing demolition, submit evidence of the following:

- Requirements of authorities relating to the work under the contract have been ascertained.
- A permit to demolish has been obtained from the appropriate authority.
- A scaffold permit has been obtained from the appropriate authority (if scaffolding is proposed to be used).
- Precautions necessary for protection of persons and property have been taken and suitable protective and safety devices have been provided to the approval of the relevant authority.
- Treatment for rodent infestation has been carried out and a certificate has been obtained from the appropriate authority.
- Fees and other costs have been paid.

Investigation and work plan
Work plan: Submit the work plan before demolition or stripping work. Include the following information:

- The method of protection and support for adjacent property.
- Locations and details of necessary service deviations and terminations.
- If removal of asbestos or of material containing asbestos is required, the information specified in NOHSC 2002 Code of Practice for the Safe Removal of Asbestos. Include information to be supplied to the removalist in clause 7.2.4, and information to be supplied by the removalist in clause 7.3.
- Confirmation of the sequence of work in **Demolition** below.
- Requirements of AS 2601 Section 2 Planning and execution.

Records
Dilapidation record: Submit a copy of the dilapidation record for inspection. Submit to each owner of each adjacent property a copy of the part of the record relating to that property, and obtain their written agreement to the contents of the record, prior to commencement of demolition.

Stockpiles
Location: Submit the locations for on-site stockpiles to be used for demolished materials for recycling in the works. Coordinate with the locations of storage for other waste streams and prevent mixing or pollution.

Recycling
Delivery location: Submit the name and address of the proposed recycling facility.

Certification: Provide evidence of delivery to the nominated recycling facility.

2 PRODUCTS

2.1 DEMOLISHED MATERIALS

Demolished materials classes
Ownership and implementation: Comply with the **Demolished materials classes table.**

Demolished materials classes table

Class	Requirement	Ownership

Class	Requirement	Ownership
Recovered items for re-use in the works	Recover without damage items identified in the **Recovered items for re-use in the works schedule**	Principal/proprietor
Recovered items for delivery to the principal	Recover without damage items identified in the **Recovered items for delivery to the principal schedule**	Principal/proprietor
Demolished material for recycling in the works	Stockpile material identified in the **Demolished material for recycling in the works schedule**	Contractor
Demolished material for recycling off site	Demolish and deliver for recycling material identified in the **Demolished material for recycling off-site schedule**	Contractor
Dismantle for relocation as part of the works	Dismantle without damage and store items identified in the **Dismantle for relocation schedule**	Principal/proprietor
Demolished for removal	Remove from the site demolished materials identified in the **Demolish for removal schedule**. Do not burn or bury on site Transit: Prevent spillage of demolishing materials in transit	Contractor

3 EXECUTION

3.1 SUPPORT

Temporary support

General: If temporary support is required, certification for its design and installation is required from a professional engineer engaged by the contractor.

Existing buildings: Until permanent support is provided, provide temporary support for sections of existing buildings which are to be altered and which normally rely for support on work to be demolished.

Ground support: Support excavations for demolition of underground structures.

Adjacent structures: Provide supports to adjacent structures where necessary, sufficient to prevent damage resulting from the works.

- Lateral supports: Provide lateral support equal to that given by the structure to be demolished.
- Vertical supports: Provide vertical support equal to that given by the structure to be demolished.

Permanent supports

General: If permanent supports for adjacent structures are necessary and are not documented, give notice and obtain instructions.

3.2 PROTECTION

Encroachment

General: Prevent the encroachment of demolished materials onto adjoining property, including public places.

Weather protection

General: If walls or roofs are opened for alterations and additions or the surfaces of adjoining buildings are exposed, provide temporary covers to prevent water penetration. Provide covers to protect existing plant, equipment and materials intended for re-use.

Dust protection

General: Provide dust-proof screens, bulkheads and covers to protect existing finishes and the immediate environment from dust and debris.

Security

General: If a wall or roof is opened for alterations and additions, provide security against unauthorised entry to the building.

Temporary screens

General: Fill the whole of designated temporary openings or other spaces using dust and weatherproof temporary screens, fixed securely to the existing structure, and install to ensure appropriate shedding of water to avoid damage to retained existing elements or adjacent structures and contents.

Type: Timber framed screens sheeted with 12 mm plywood and painted. Seal the junctions between the screens and the openings.

Temporary access

General: Provide a substantial temporary doorset fitted with a rim deadlock, and remove on completion of demolition.

Exposed surfaces

General: Where necessary protect and weatherproof the surfaces of adjacent structures exposed by demolition.

Recovered items

General: Recover all components associated with the listed items that are essential for their re-use. Minimise damage during removal.

3.3 DEMOLITION

Dilapidation record

Purpose: Use the dilapidation record to assess the damage and making good arising out of demolition work.

Availability: Keep the records of the investigations on site and available for inspection until practical completion of the contract.

Encroachment

General: If encroachments from adjacent structures are encountered and are not documented, give notice and obtain instructions.

Concrete slabs

General: Using a diamond saw, neatly cut back or trim to new alignment with a clean true face existing concrete slabs to be partially demolished or penetrated.

Recycling: If concrete crushing is proposed on site, submit details of plant and environmental controls.

Refrigeration systems
General: Undertake demolition work on refrigeration systems in conformance with:
- AS/NZS 1677.2.
- The recommendations of SAA HB 40.1 and SAA HB 40.2.

Explosives
General: Do not use explosives.

3.4 HAZARDOUS MATERIALS

General
General: Hazardous materials that have already been identified are set out in the **Identified hazardous materials schedule**.

Hazardous materials
General: Give notice immediately hazardous materials or conditions are found, including the following:
- Asbestos or material containing asbestos.
- Flammable or explosive liquids or gases.
- Toxic, infective or contaminated materials.
- Radiation or radioactive materials.
- Noxious or explosive chemicals.
- Tanks or other containers which have been used for storage of explosive, toxic, infective or contaminated substances.

3.5 COMPLETION

Notice of completion
General: Give at least 7 working days' notice of completion of demolition so that adjacent structures may be inspected following completion of demolition.

Making good: Make good any damage arising out of demolition work. Obtain written acceptance from the owner of each adjoining property of completeness and standard of making good.

Temporary support
General: Clear away at completion of demolition.

0223 SERVICE TRENCHING

1 GENERAL

1.1 CROSS REFERENCES

General
General: Conform to the *General requirements* worksection.

1.2 DESIGN

Shoring and lining systems
Steel shoring and trench lining systems: To AS 4744.1.

Hydraulic shoring and trench lining equipment: To AS 5047.

1.3 INSPECTION

Notice
Inspection: Give notice so that inspection may be made at the following stages:
- Service trenches excavated before laying the service.
- Services laid in trenches and ready for backfilling.

1.4 TESTS

Density tests
Testing authority: Have density tests of pipe bedding and backfilling carried out by a Registered testing authority.

Test methods:
- Field dry density: AS 1289.5.3.2 or AS 1289.5.3.5.
- Standard maximum dry density: AS 1289.5.1.1.
- Dry density ratio: AS 1289.5.4.1.
- Density index: AS 1289.5.6.1.

1.5 SUBMISSIONS

Safety and stability
General: If shuttering and/or bracing of the sides of a trench is required for safety and stability, provide proposals.

2 EXECUTION

2.1 EXCAVATING

Existing surfaces
General: Before excavating trenches, saw-cut existing concrete and bituminous surfaces on each side of the trench to provide a straight even joint. Lift and store unit paving for later reinstatement.

Excavation
General: Excavate for underground services:
- To required lines and levels, with uniform grades.
- Straight between personnel access ways, inspection points and junctions.
- With stable sides.

Trench widths
General: Keep trench widths to the minimum consistent with the laying and bedding of the relevant service and construction of personnel access ways and pits.

Trench depths
General: As required by the relevant service and its bedding method.

Adjacent to footings: If excavation is necessary below the zone of influence of the underside of adjacent footings, give notice, and provide support for the footings as instructed.

Obstructions
General: Clear trenches of sharp projections. Cut back roots encountered in trenches to at least 600 mm clear of services. Remove other obstructions including stumps and boulders which may interfere with services or bedding.

Dewatering
General: Keep trenches free of water. Place bedding material, services and backfilling on firm ground free of surface water.

Excess excavation
General: If trench excavation exceeds the correct depth, reinstate to the correct depth and bearing value using compacted bedding material or sand stabilised with 1 part of cement to 20 parts of sand by volume.

2.2 BORING

Subcontractor
General: If under road boring is required in lieu of trenches, engage a suitably qualified subcontractor to do the work.

Process
General: Ensure a tight fit to the service pipes. If voids are encountered, fill by pressure grouting.

2.3 BACKFILLING

General
General: Backfill service trenches as soon as possible after the service has been laid and bedded, if possible on the same working day. Place the backfill in layers ≤ 150 mm thick and compact to the nominated density which applies to the location of the trenches as shown on the drawings or in conformance with the **Backfill density schedule**.

Marking services
Underground marking tape: To AS/NZS 2648.1.

Backfill material
General: General fill with no stones greater than 25 mm occurring within 150 mm of the service, or other materials as required for particular services or locations. Well graded, inorganic, non-perishable material, maximum size 75 mm, plasticity index ≤ 55 %.

Under roads and paved areas and within 4 m of structures: Coarse sand, controlled low strength material or fine crushed rock.

In topsoil areas: Complete the backfilling with topsoil for at least the top 100 mm.

In reactive clay: In sites classified M, M-D, H, H-D or E to AS 2870, re-use excavated site material at a moisture content within ± 1% of that of the adjoining in situ clay.

2.4 REINSTATEMENT OF SURFACES

General
General: Reinstate existing surfaces removed or disturbed by trench excavations to match existing and adjacent work.

Lawn areas
General: Provide 150 mm of loam and resow the lawn over the trench and other disturbed areas.

Concrete surfaces
General: Provide crushed rock base and subbase to match the existing pavement. Prime coat the cut edges of the existing surfaces with cement slurry. Lay and compact concrete so that the edges are flush and the centre is cambered 10 mm above the adjoining existing surfaces.

Minimum thickness: 75 mm or the adjacent pavement thickness, whichever is thicker.

Reinforcement and dowels: If required, provide steel reinforcement with dowels into the adjacent concrete.

Joints: Provide joints in locations to coincide with and detail to match joints in existing pavements.

Concrete strength: 25 MPa.

Curing: Cure by keeping continuously wet for 7 days.

Bituminous surfaces
General: Provide crushed rock base and subbase to match the existing pavement. Prime coat the edges of the existing surfacing with bitumen. Lay and compact hot-mix asphalt so that the edges are flush and the centre is cambered 10 mm above the existing pavement. If hot pre-mix is not available, cold pre-mix may be used.

Minimum asphalt thickness: 50 mm or the adjacent pavement thickness, whichever is thicker.

Segmental paving
General: Provide sand bedding and compacted crushed rock base, if required to match the existing construction. Reinstate the paving units.

0501 DEMOLITION (INTERIOR AND ALTERATIONS)

1 GENERAL

1.1 CROSS REFERENCES

General

General: Conform to the *General requirements* worksection.

1.2 STANDARD

General

Demolition: To AS 2601.

1.3 INTERPRETATION

Definitions

For the purposes of this worksection, the following definitions apply:

- Demolition: The complete or partial dismantling of a building or structure, by pre-planned and controlled methods or procedures.
- Dilapidation record: The photographic or video and written record made before commencement of demolition work of the condition of the portion of the existing building being retained, adjacent buildings, and other relevant structures or facilities.
- Dismantle: The reduction of an item to its components in a manner to allow re-assembly.
- Recover: The disconnection and removal of an item in a manner to allow re-installation.

1.4 INSPECTION

Notice

Inspection: Give notice so that inspection may be made of the following:

- Services before disconnection or diversion.
- Contents of building before commencement of demolition.
- Site after removal of demolished materials.
- Services after reconnection or diversion.

1.5 SUBMISSIONS

Authorities

Evidence of compliance: Before commencing demolition, submit evidence of the following:

- Requirements of authorities relating to the work under the contract have been ascertained.
- A permit to demolish has been obtained from the appropriate authority.
- Precautions necessary for protection of persons and property have been taken and suitable protective and safety devices provided to the approval of the relevant authority.
- Treatment for rodent infestation has been carried out and a certificate has been obtained from the appropriate authority.
- Fees and other costs have been paid.

Investigation and work plan

Work plan: Submit the work plan before demolition or stripping work. Include the following information:

- Locations and details of necessary service deviations and terminations.
- If removal of asbestos or of material containing asbestos is required, the information specified in NOHSC 2002 Code of Practice for the Safe Removal of Asbestos. Include information to be supplied to the removalist clause 7.2.4, and information to be supplied by the removalist clause 7.3.
- To AS 2601 Section 2.

Records

Dilapidation record: Submit a copy of the dilapidation record for inspection.

Recycling

Delivery location: Submit the name and address of the proposed recycling facility.

2 PRODUCTS

2.1 DEMOLISHED MATERIALS

Demolished materials

Ownership: Ownership of demolished materials is described in the **Demolished materials classes table**.

Demolished materials classes

Ownership and implementation: Comply with the **Demolished materials classes table.**

Demolished materials classes table

Class	Requirement	Ownership
Recovered items for re-use in the works	Recover without damage items identified in the **Recovered items for re-use in the works schedule**	Principal/proprietor
Demolished material for recycling off site	Demolish and deliver for recycling material identified in the **Demolished material for recycling off-site schedule**	Contractor
Demolished for removal	Remove from the site demolished materials identified in the **Demolish for removal schedule**. Do not burn or bury on site Transit: Prevent spillage of demolishing materials in transit	Contractor

3 EXECUTION

3.1 SUPPORT

Temporary support

General: If temporary support is required, certification for its design and installation is required from a professional engineer engaged by the contractor.

Existing buildings: Until permanent support is provided, provide temporary support for sections of existing buildings which are to be altered and which normally rely for support on work to be demolished.

3.2 PROTECTION

Encroachment

General: Prevent the encroachment of demolished materials onto adjoining property, including public places.

Dust protection

General: Provide dust-proof screens, bulkheads and covers to protect existing finishes and the immediate environment from dust and debris.

Security

General: If a wall or roof is opened for alterations and additions, provide security against unauthorised entry to the building.

Temporary screens

General: Fill the whole of designated temporary openings or other spaces using dust and weatherproof temporary screens, fixed securely to the existing structure, and install to ensure appropriate shedding of water to avoid damage to retained existing elements or adjacent structures and contents.

Type: Timber framed screens sheeted with fibre cement and painted. Seal the junctions between the screens and the openings.

Temporary access

General: Provide a substantial temporary doorset fitted with a rim deadlock, and remove on completion of demolition.

3.3 DEMOLITION

Dilapidation record

Purpose: Use the dilapidation record to assess the damage and making good arising out of demolition work.

Availability: Keep the records of the investigations on site and available for inspection until practical completion of the contract.

Concrete slabs

General: Using a diamond saw, neatly cut back or trim to new alignment with a clean true face existing concrete slabs to be partially demolished or penetrated.

Explosives

General: Do not use explosives.

3.4 HAZARDOUS MATERIALS

General

General: Hazardous materials that have already been identified are set out in the **Identified hazardous materials schedule**.

Hazardous materials

General: Give notice immediately hazardous materials or conditions are found, including the following:

- Asbestos or material containing asbestos.
- Flammable or explosive liquids or gases.
- Toxic, infective or contaminated materials.
- Radiation or radioactive materials.
- Noxious or explosive chemicals.
- Tanks or other containers which have been used for storage of explosive, toxic, infective or contaminated substances.

Asbestos removal

Method: Use wet removal methods as recommended in the Code of Practice for the Removal of Asbestos (NOHSC 2002), including Part 4 for insulation and lagging, and Part 9 for asbestos cement.

Monitoring: Have dust monitoring performed by an independent testing authority.

3.5 COMPLETION

Notice of completion

General: Give at least 7 working days' notice of completion of demolition so that adjacent structures may be inspected following completion of demolition.

Making good: Make good any damage arising out of demolition work. Obtain written acceptance from the owner of each adjoining property of completeness and standard of making good.

Temporary support

General: Clear away at completion of demolition.

0901 ELECTRICAL GENERAL REQUIREMENTS

1 GENERAL

1.1 AIMS

Responsibilities
General: Provide electrical systems as documented.

1.2 CROSS REFERENCES

General
General: Conform to the *General requirements* worksection.

Associated worksections
Associated worksections: Conform to the following:

- *Adhesives, sealants and fasteners*.
- *Fire-stopping*.
- *Metals and prefinishes* for off-site painting and electroplated or in-line galvanized finishes.
- *Demolition*.
- *Service trenching*.

Precedence
Technical worksections: The requirements of subsequent electrical services worksections of the specification override conflicting requirements in this worksection.

1.3 STANDARDS

General
General: To AS/NZS 3000 Part 2 unless otherwise documented.

Electrical systems: To AS/NZS 3008.1.1 and SAA HB 301.

Degrees of protection (IP code): To AS/NZS 60529.

EMC: To AS/NZS 61000.

Telecommunications systems: To AS/ACIF S008, AS/ACIF S009, AS/NZS 3080, SAA HB 243 and SAA HB 29.

1.4 INTERPRETATIONS

Abbreviations
General: For the purposes of this contract the abbreviations given below apply.

- EMC: Electromagnetic compatibility.
- EMI: Electromagnetic interference.

Definitions
General: For the purposes of this contract the definitions given below apply:

- Accessible: Readily accessible to AS/NZS 3000.
- High level interface: Systems transfer information in a digital format using an open system interface.
- Hot-dip galvanized: Zinc coated to AS/NZS 4680 after fabrication with coating thickness and mass to AS/NZS 4680 Table 1.
  . Metallic-coated: Steel coated with zinc or aluminium-zinc alloy as follows:
  . Metallic-coated steel sheet: To AS 1397. Metal thicknesses specified are base metal thicknesses.
- Ferrous open sections coated by an in-line process: To AS/NZS 4791.
- Ferrous hollow sections coated by a continuous or specialised process: To AS/NZS 4792.
- Industrial: IP56 to AS/NZS 60529.
- Low level interface: Systems transfer information via terminals and voltage free contacts.
- Weatherproof: IPX6 to AS/NZS 60529.

1.5 DRAWINGS AND MANUALS FOR EXISTING SERVICES

General
General: No warranty is given as to the completeness or accuracy of drawings and/or manuals of existing services.

1.6 SUBMISSIONS

General
Default timing: Make submissions ≥ 5 business days prior to the ordering of products for, or starting the installation of, the respective portions of the works.

Drawings
General: Minimum A1 drawing size.

Standard: To AS 1100 Parts 101 and 301, AS 1102 Parts 101, 102, 103, 106, 107, 108, and 111, and AS/NZS 3085.1 as applicable.

Building work drawings: Submit detailed dimensioned drawings showing all:

- Access doors and panels.
- Conduits to be cast in slabs.
- Holding down bolts and other anchorage and/or fixings required complete with loads to be imposed on the structure during installation and operation.
- Openings, penetrations and block-outs.
- Pipe sleeves.
- Plinths, kerbs and bases.
- Required external openings.

Services coordination: Coordinate with other building and service elements. Show adjusted positions on the shop and record drawings.

Space requirements: Check space requirements of equipment and services indicated diagrammatically in the contract documents.

Execution details
General: Before starting the respective portions of the installation, submit the following:

- Embedded services: Proposed method for embedding services in concrete walls or floors or chasing into concrete or masonry walls.
- Fixing of services: Typical details of locations, types and methods of fixing of services to structure.
- Inaccessible services: If services will be enclosed and not accessible after completion, submit proposals for location of service runs and fittings.

Marking and labelling
General: Before marking and labelling submit:

- Samples of the proposed labels.
- A schedule showing, for each item or type of item:
  . A description of the item or type of item sufficient to identify it.
  . The proposed text of the marking or label
  . The proposed location of the marking or label.

Building penetrations

General: If it is proposed to penetrate or fix to the following, submit details of the methods proposed to maintain the required structural, fire and other properties:

- Structural building elements including external walls, fire walls, fire doors and access panels, other tested and rated assemblies or elements, floor slabs and beams.
- Membrane elements including damp-proof courses, waterproofing membranes and roof coverings. If penetrating membranes, provide a waterproof seal between the membrane and the penetrating component.

Technical data

Data to be submitted: Include at least the following information in technical submissions:

- Assumptions.
- Calculations.
- Certification of compliance with the applicable code or standard.
- Design basis and performance parameters.
- Drawings.
- Installation and maintenance requirements.
- Manufacturers' technical literature.
- Risk assessment.
- Samples where relevant.
- Sketch, single line diagram, flowchart.
- Technical data schedules corresponding to the equipment schedules in the contract documents. If there is a discrepancy between the two, substantiate the change.

Certification

Submit certification that the plant and equipment submitted meets all requirements and capacities of the contract documents except for departures that are identified in the submission.

2 PRODUCTS

2.1 ACCESSORIES

General

Responsibilities: Provide accessories as documented.

Proprietary equipment: The requirements of this specification over-ride the specifications inherent in the selection of a particular make and model of accessory.

Uniformity: All accessories and outlets located in close proximity are to be the same manufacture, size, finish and material.

Default finish: To be selected from the manufacturers standard range.

3 EXECUTION

3.1 PERFORMANCE

General

Performance criteria: Meet the performance criteria as documented.

3.2 DEMOLITION

General

General: Decommission, isolate, demolish and remove from the site all existing redundant cables and equipment including minor associated components that become redundant as a result of the demolition.

Breaking down: Disassemble or cut up equipment where necessary to allow removal.

Recovered materials: Recover all components associated with the listed items. Minimise damage during removal and deliver to the locations scheduled.

Demolished materials

Demolished materials classes

Ownership and implementation: Comply with the **Demolished materials classes table**.

Demolished materials classes table

Class	Requirement	Ownership
Recovered items for re-use in the works	Recover without damage items identified in the **Recovered items for re-use in the works schedule**	Principal/Proprietor
Recovered items for delivery to the principal	Recover items identified in the **Recovered items for delivery to the** *principal schedule*	Principal/Proprietor
Demolished for removal	Remove from the site demolished materials identified in the **Demolish for removal schedule**. Do not burn or bury on site Transit: Prevent spillage of demolishing materials in transit	Contractor

Re-used components

General: Clean re-used components and test for compliance with current Australian Standards before returning to service. Provide results of compliance tests.

3.3 WORK ON EXISTING SYSTEMS

General

General: Before starting work on existing systems, measure existing conditions. Submit the results for information.

- If the existing conditions are less than necessary to meet the requirements in the contract

documents, submit proposals to rectify the deficiencies with related costing, time and other impacts.

- Subject to the results from the preceding work on existing systems, achieve the performance in the contract documents.

3.4 SERVICES CONNECTIONS

Connections

General: Connect to network distributor services or service points. Excavate to locate and expose connection points. On completion reinstate the surfaces and facilities that have been disturbed.

Network distributors' requirements

General: If the network distributor elects to perform or supply part of the works, make the necessary arrangements. Install equipment supplied, but not installed, by the authorities.

3.5 INSTALLATION

General

Fixing: If non-structural building elements are not suitable for fixing equipment and services to, fix directly to structure and trim around holes or penetrations in non-structural elements.

Installation: Install equipment and services plumb, fix securely and organise reticulated services neatly. Allow for movement in both structure and services.

Concealment: Conceal all cables, ducts, trays, pipes etc. unless installed in plant spaces, ceilings, riser cupboards, etc. or unless otherwise documented. If possible, do not locate on external walls.

Lifting: Provide heavy items of equipment with permanent fixtures for lifting as recommended by the manufacturer.

Suspended ground floors: Keep all parts of services under suspended ground floors > 150 mm clear of the ground surface. Make sure services do not impede access.

Arrangement: Arrange services so that services running together are parallel with each other and with adjacent building elements.

Cable systems

Systems: Provide the following:

- Inaccessible concealed spaces: Cable in UPVC conduit.
- Face, plastered or rendered masonry surfaces: Cable in UPVC conduit.
- Walls filled with bulk thermal insulation: Cables in PVC conduit.
- Plant rooms: Cable in heavy duty UPVC conduit, or on tray or in duct.

Installation of accessories

General: Unless installed on purpose built ductwork. Install accessories in conformance with the **Installation of accessories table**.

Location: Final location of all outlets and equipment to be confirmed on site prior to installation.

Spacing from adjacent horizontal surface: ≥ 75 mm to the centre of accessory socket.

Default mounting heights to centre of accessory plate:

Outlets	300 mm
Switches and controls	1100 mm

Flush mounting: Provide flush mounted accessories except in plant rooms.

Common face plates: Mount adjacent flush mounted accessories under a common faceplate.

Restricted location: Do not install wall boxes across junctions of wall finishes.

Surface mounting: Proprietary mounting blocks.

Installation of accessories table

Wall construction	Installation and concealed cabling facilities
Rendered masonry partition	Flush wall box with conduit chased into wall
Double sided face brick partition	Vertically mounted flush wall box with conduit concealed in cut bricks
Face brick external cavity wall	Flush wall box with thermoplastic insulated cables in conduit run in cavity and tied against inner brick surface, or thermoplastic sheathed cables run in cavity
Stud partition	Flush plate secured to proprietary support bracket or wall box

Installation of ceiling mounted appliances

Connections: Appliances: Provide flush mounted outlets on the ceiling next to support brackets.

Mounting: Mount appliances independent of ceiling tiles and suspended ceiling material.

Connections: Fixed equipment: Provide concealed permanent connections.

Fixing: For equipment and appliances heavier than 30 kg provide support through the suspended ceiling to the building structure. Brace appliances that have excessive bending moments, are heavy or vibrate, to prevent horizontal movement.

Differential movement

General: If the geotechnical site investigation report predicts differential movements between buildings and the ground in which conduits are buried, provide movement control joints in the conduits.

- Location: Adjacent to the conduit supports which are closest to the perimeter of the building.
- Arrangement: Arrange conduits to minimise the number of movement control joints.
- Magnitude: Accommodate the predicted movements.

3.6 BUILDING PENETRATIONS

Penetrations

Fire rated building elements: Seal penetrations with a system conforming to AS 4072.1.

Non-fire rated building elements: Seal penetrations around conduits and sleeves. Seal around cables within sleeves. If the building element is acoustically rated, maintain the rating.

Sleeves

General: If piping or conduit penetrates building elements, provide metal or UPVC sleeves formed from pipe sections as follows:

- Movement: Arrange to permit normal pipe or conduit movement.
- Diameter (for non fire-rated building elements): Sufficient to provide an annular space around the pipe or pipe insulation of at least 12 mm.
- Prime paint ferrous surfaces.
- Terminations:
  . If cover plates are fitted: Flush with the finished building surface.
  . In fire-rated and acoustic-rated building elements: 50 mm beyond finished building surface.
  . In floors draining to floor wastes: 50 mm above finished floor.
  . Elsewhere: 5 mm beyond finished building surface.
- Termite management: To AS 3660.1.
- Thickness:
  . Metal: ≥ 1 mm.
  . UPVC: ≥ 3 mm.

Sleeves for cables

General: For penetrations of cables not enclosed in conduit through ground floor slabs, beams and external walls provide sleeves formed from UPVC pipe sections.

- MIMS cables: Provide sleeves for penetrations through masonry.

3.7 CONCRETE PLINTHS

Construction

- Concrete: Grade N20.
- Finish: Steel float flush with the surround.
- Reinforcement: Single layer of F62 fabric.
- Surround: Provide galvanized steel surround at least 75 mm high and 1.6 mm thick. Fix to the floor with masonry anchors. Fill with concrete.

3.8 PLANT AND EQUIPMENT ACCESS

General

Services and equipment: Locate and arrange all services and equipment so that:

- They comply with the relevant requirements of the appropriate Occupational Health and Safety regulations.
- Failure of plant and equipment (including leaks) does not create a hazard for the building occupants.
- Failure of plant and equipment (including leaks) cause a minimum or no damage to the building, its finishes and contents.
- Inspection and maintenance operations can be arranged to minimise inconvenience and disruption to building occupants or damage to the building structure or finishes.
- Services and equipment are readily accessible for inspection and maintenance and arranged so that inspection and maintenance can be carried out in a safe and efficient manner. Include the following:
  . Conform to the relevant requirements of AS 1470, AS 1657, AS/NZS 1892.1 and AS/NZS 2865.
  . If parts of the plant require regular inspection and maintenance either locate plant so it is safely accessible from floor level or provide permanent access platforms and ladders.
  . In false ceilings locate items of equipment that require inspection and maintenance above tiled parts where possible. If this is not possible (for example if above set plaster or other inaccessible ceilings) provide access panels. Arrange services and plant locations to reduce the number of access panels. Coordinate with other trades to use common access panels where feasible.
  . Modify manufacturer's standard equipment when necessary to provide the plant access in the contract documents.

3.9 SEISMIC RESTRAINT

Provisions

General: Arrange all components, other than service items exempted in AS 1170.4, to resist seismic loads determined in accordance with AS 1170.4. Securely fix all plant and equipment to the building structure. Do not rely on gravity and/or friction to resist seismic forces.

Anti-vibration mounts: Use horizontally restrained type.

Components: Do not use components that will be damaged by earthquake conditions. Protect systems against the adverse effects of components such as mercury switches that, although not damaged by earthquake, may malfunction.

3.10 PAINTING AND FINISHES

General

General: If exposed to view (including in plant rooms) paint new services and equipment.

Surfaces painted or finished off-site: Conform to *Metals and prefinishes.*

Exceptions: Do not paint chromium or nickel plating, anodised aluminium, GRP, stainless steel, non-metallic flexible materials and normally lubricated machined surfaces. Surfaces with finishes applied off-site need not be re-painted on-site provided the corrosion resistance of the finish is not less than that of the respective finish in this clause.

Standard

General: Conform to the recommendations of AS/NZS 2311 Sections 3, 6 and 7 or AS/NZS 2312 Sections 5, 8 and 10, as applicable.

Low VOC emitting paints

Provide the following low odour/low environmental impact paint types with the following VOC limits:

- Primers and undercoats: < 5 g/litre.
- Low gloss white or light coloured latex paints for broadwall areas: < 5 g/litre.
- Coloured low gloss latex paints: < 85 g/litre.

- Gloss latex paints: < 90 g/litre.

Painting systems

New unpainted interior surfaces: To AS/NZS 2311 Table 5.1.

New unpainted exterior surfaces: To AS/NZS 2311 Table 5.2.

Paint application

Coats: Apply the first coat immediately after substrate preparation and before contamination of the substrate can occur. Ensure each coat of paint or clear finish is uniform in colour, gloss, thickness and texture and free of runs, sags, blisters or other discontinuities.

Combinations: Do not combine paints from different manufacturers in a paint system.

Protection: Remove fixtures before starting to paint and refix in position undamaged on completion.

3.11 MARKING AND LABELLING

General

General: Mark services and equipment to provide a ready means of identification.

- Locations exposed to weather: Provide durable materials.
- Pipes, conduits and ducts: Identify and label to AS 1345.
- Cables: Label at each end to indicate the origin and destination of the cable.

Consistency: Label and mark equipment using a consistent scheme across all services elements of the project.

Operating and maintenance manuals: Provide marking an labelling text identical to the text and terminology used in operating and maintenance manuals.

Accessories

Label isolating switches and outlets to identify circuit origin.

Labels and notices

General: Select from the following materials:

- Cast metal.
- For indoor applications only, engraved two-colour laminated plastic.
- Proprietary pre-printed self-adhesive flexible plastic labels.
- Stainless steel or brass ≥ 1 mm thick with black filled engraved lettering.

Emergency functions: To AS 1319.

Colours: Generally in conformance with AS 1345 as appropriate, otherwise black lettering on white background except as follows.

- Danger, warning labels: White lettering on red background.
- Main switch and caution labels: Red lettering on white background.

Edges: If labels exceed 1.5 mm thickness, radius or bevel the edges.

Fixing: Fix labels securely using screws, rivets, proprietary self-adhesive labels or double-sided adhesive tape.

- If labels are mounted in extruded aluminium sections, use rivets or countersunk screws to fix the extrusions.
- Use aluminium or monel rivets for aluminium labels.

Label locations: Locate labels so that they are easily seen and are either attached to, below or next to the item being marked.

Label text: To correspond to terminology and identifying number of the respective item as shown on the record drawings and documents.

Lettering heights:

- Danger, warning and caution notices: ≥ 10 mm for main heading, ≥ 5 mm for remainder.
- Equipment labels within cabinets: ≥ 3.5 mm.
- Identifying labels on outside of cabinets: ≥ 5 mm.
- Other locations: ≥ 3 mm.

Operable devices: Mark to provide a ready means of identification. Include the following:

- Controls.
- Indicators, gauges, meters and the like.
- Isolating switches.
- Outlets.

Underground cable routes

Survey: Accurately record the routes of underground cables before backfilling. Include on the record drawings.

Records: Provide digital photographic records of underground cable routes before backfilling. Include in operation and maintenance manual.

Location marking: Accurately mark the location of underground cables with route markers consisting of a marker plate set flush in a concrete base.

Markers: Place markers at each joint, route junction, change of direction, termination and building entry point and in straight runs at intervals of not more than 100 m.

Marker bases: 200 mm diameter x 200 mm deep, minimum concrete.

Direction marking: Show the direction of the cable run by means of direction arrows on the marker plate. Indicate distance to the next marker.

Plates: Brass, aluminium or mild steel hot-dipped galvanized, minimum size 75 x 75 x 1 mm thick.

Plate fixing: Waterproof adhesive and 4 brass or stainless steel countersunk screws.

Marker height: Set the marker plate flush with paved surfaces, and 25 mm above other surfaces.

Marker tape: Where electric bricks or covers are not provided over underground wiring, provide a 150 mm wide yellow or orange marker tape bearing the words '*WARNING – electric cable buried below*', laid in the trench 150 mm below ground level.

3.12 OPERATION AND MAINTENANCE MANUALS

Additional information

General: Provide maintenance manuals including the following in addition to that specified in the *General requirements* worksection:

- Installation description: General description of the installation.
- Systems descriptions: Technical description of the systems installed, written to ensure that the principal's staff fully understand the scope and facilities provided. Identify function, normal operating characteristics, and limiting conditions.
- Systems performance: Technical description of the mode of operation of the systems installed.
- Equipment descriptions:
  . Manufacturers' technical literature for equipment installed, assembled specifically for the project, excluding irrelevant matter. Mark each product data sheet to clearly identify specific products and component parts used in the installation, and data applicable to the installation.
  . Supplements to product data to illustrate relations of component parts. Include typed text as necessary.
- Operation procedures:
  . Safe starting up, running in, operating and shutting down procedures for systems installed. Include logical step-by-step sequence of instructions for each procedure.
  . Control sequences and flow diagrams for systems installed.
  . Legend for colour-coded services.
  . Schedules of fixed and variable equipment settings established during commissioning and maintenance.
- Maintenance procedures:
  . Schedule of normal consumable items, local sources of supply, and expected replacement intervals up to a running time of 40 000 hours. Include lubricant and lubrication schedules for equipment.
  . Instructions for use of tools and testing equipment.
  . Emergency procedures, including telephone numbers for emergency services, and procedures for fault finding.
  . Material safety data sheets (MSDS).
- Certificates:
  . Copies of test certificates for the installation and equipment used in the installation.
  . Test reports.
- Drawings:
  . Single line diagrams.
  . Service route layouts.
  . Switchgear and controlgear assembly circuit schedules including electrical service characteristics, controls and communications.

3.13 RECORD DRAWINGS

General

General: Show dimensions, types and location of the services in relation to permanent site features and other underground services. Show the spatial relationship to building structure and other services.

Include all changes made during commissioning and the maintenance period.

Drawings: Include all documented shop drawings.

Extensions and/or changes to existing: If a drawing shows extensions and/or alterations to existing installations, include sufficient of the existing installation to make the drawing comprehensible without reference to drawings of the original installation.

3.14 TOOLS AND SPARE PARTS

Tools and spare parts schedule

General: At least 8 weeks before the date for practical completion, submit a schedule of tools, portable instruments and spare parts necessary for maintenance of the installation. For each item state the recommended quantity and the manufacturer's current price. Include the following in the prices:

- Checking receipt, marking and numbering in accordance with the spare parts schedule.
- Packaging and delivery to site.
- Painting, greasing and packing to prevent deterioration during storage.
- Referencing equipment schedules in the operation and maintenance manuals.
- Suitable means of identifying, storing and securing the tools and instruments. Include instructions for use.

Spares

General: Provide spare parts listed in the appropriate worksections.

Replacement: Replace spare parts consumed during the maintenance period.

3.15 COMMISSIONING

Circuit protection

General: Confirm that circuit protective devices are sized and adjusted to protect installed circuits.

Controls

General: Calibrate, set and adjust control instruments, control systems and safety controls.

Notice

General: Give sufficient notice for inspection to be made of the commissioning of the installation.

Reports

General: Submit reports indicating observations and results of tests and compliance or non-compliance with requirements.

3.16 CLEANING

General

Practical completion: At practical completion, clean the following:

- Insides of switchgear and controlgear assemblies.
- Luminaires.
- Switchgear and contactors, and other electrical contacts. Adjust as necessary.

3.17 COMPLETION TESTS

General

General: Test the works under the contract to demonstrate compliance with the documented performance requirements.

Functional checks

General: Carry out functional and operational checks on energised equipment and circuits and make final adjustments for the correct operation of safety devices and control functions.

Proprietary equipment

General: Submit type test reports confirming compliance of proprietary equipment.

Sound pressure level measurements

Correction for background noise: To AS/NZS 2107 Table B1.

External: To AS 1055.1.

Internal: To AS/NZS 2107.

Measurement positions: If a test position is designated only by reference to a room or space, do not take measurements less than 1 m from the floor, ground or walls.

Sound pressure level analysis: Measure the sound pressure level and the background sound pressure level over the full range of octave band centre frequencies from 31.5 Hz to 8 kHz at the designated positions.

Sound pressure levels: Measure the A-weighted sound pressure levels and the A-weighted background sound pressure levels at the designated positions.

Test instruments

General: Use instruments calibrated by a registered testing authority.

3.18 TRAINING

General

Duration: Instruction to be available for the whole of the commissioning and running-in periods.

Format: Conduct training at agreed times, at system or equipment location. Also provide seminar instruction to cover all major components.

Operation and maintenance manuals: Use items and procedures listed in the final draft operation and maintenance manuals as the basis for instruction. Review contents in detail with the principal's staff.

Certification: Provide written certification of attendance and participation in training for each attendee. Provide register of certificates issued.

Demonstrators

General: Use only qualified manufacturer's representatives who are knowledgeable about the installations.

Maintenance

General: Explain and demonstrate to the principal's staff the purpose, function and maintenance of the installations.

Operation

General: Explain and demonstrate to the principal's staff the purpose, function and operation of the installations.

3.19 MAINTENANCE

General

General: During the maintenance and defects liability periods, carry out periodic inspections and maintenance work as recommended by manufacturers of supplied equipment, and promptly rectify faults.

Emergencies: Attend emergency calls promptly.

Maintenance program

General: Submit details of maintenance procedures and program, relating to installed plant and equipment, 6 weeks before the date for practical completion. Indicate dates of service visits. State contact telephone numbers of service operators and describe arrangements for emergency calls.

Maintenance records

General: Submit, in binders which match the manuals, loose leaf log book pages designed for recording completion activities including operational and maintenance procedures, materials used, test results, comments for future maintenance actions and notes covering the condition of the installation. Include completed log book pages recording the operational and maintenance activities performed up to the time of practical completion.

Certificates: Include test and approval certificates.

Certification: On satisfactory completion of the installation, submit certificates stating that each installation is operating correctly.

Number of pages: The greater of 100 pages or enough pages for the maintenance period and a further 12 months.

Referenced documents: If referenced documents or technical worksection s require that log books or records be submitted, include this material in the maintenance records.

Service visits: Record comments on the functioning of the systems, work carried out, items requiring corrective action, adjustments made and name of service operator. Obtain the signature of the principal's designated representative.

Site control

General: Report to the principal's designated representative on arriving at and before leaving the site.

0902 ELECTRICAL DESIGN AND INSTALL

1 GENERAL

1.1 AIMS

Responsibilities
General: Provide electrical systems as documented.

Qualification
General: Use only persons appropriately experienced and qualified to undertake the electrical design work on the systems documented.

Performance
General: Carry out verification tests and measurements to show compliance with the documentation.

1.2 CROSS REFERENCES

General
General: Conform to the *General requirements* worksection.

1.3 STANDARDS

General
General: To AS/NZS 3000 Part 2 unless otherwise documented.

Electrical systems: To AS/NZS 3008.1.1 and SAA HB 301.

Degrees of protection (IP code): To AS/NZS 60529.

EMC: To AS/NZS 61000.

Telecommunications systems: To AS/ACIF S008, AS/ACIF S009, AS/NZS 3080, SAA HB 243 and SAA HB 29.

2 EXECUTION

2.1 GENERAL

General
Arrangement: Arrange services so that services running together are parallel with each other and with adjacent building elements.

Fixing: If non-structural building elements are not suitable for fixing equipment and services to, fix directly to structure and trim around holes or penetrations in non-structural elements.

Installation: Install equipment and services plumb, fix securely and organise reticulated services neatly. Allow for movement in both structure and services.

Lifting: Provide heavy items of equipment with permanent fixtures for lifting as recommended by the manufacturer.

Suspended ground floors: Keep all parts of services under suspended ground floors > 150 mm clear of the ground surface. Make sure services do not impede access.

Submissions
Samples: Provide samples of all accessories and luminaires.

Technical data: Submit documentation to fully describe the proposed installation.

Installation of accessories
General: Unless installed on purpose built ductwork. Install accessories in conformance with the **Installation of accessories table**.

Location: Final location of all outlets and equipment to be confirmed on site prior to installation.

Spacing from adjacent horizontal surface: ≥ 75 mm to the centre of accessory socket.

Default mounting heights to centre of accessory plate:

Outlets	300 mm
Switches and controls	1100 mm

Flush mounting: Provide flush mounted accessories except in plant rooms.

Common face plates: Mount adjacent flush mounted accessories under a common faceplate.

Restricted location: Do not install wall boxes across junctions of wall finishes.

Surface mounting: Proprietary mounting blocks.

Installation of accessories table

Wall construction	Installation and concealed cabling facilities
Rendered masonry partition	Flush wall box with conduit chased into wall
Double sided face brick partition	Vertically mounted flush wall box with conduit concealed in cut bricks
Face brick external cavity wall	Flush wall box with thermoplastic insulated cables in conduit run in cavity and tied against inner brick surface, or thermoplastic sheathed cables run in cavity
Stud partition	Flush plate secured to proprietary support bracket or wall box

Installation of ceiling mounted appliances
Connections: Appliances: Provide flush mounted outlets on the ceiling next to support brackets.

Mounting: Mount appliances independent of ceiling tiles and suspended ceiling material.

Connections: Fixed equipment: Provide concealed permanent connections.

Fixing: For equipment and appliances heavier than 30 kg provide support through the suspended ceiling to the building structure. Brace appliances that have excessive bending moments, are heavy or vibrate, to prevent horizontal movement.

Manuals
General: Conform to the **Operation and maintenance manuals** clause in *General requirements*.

Certification
General: Submit certification that the plant and equipment submitted meets all requirements and

capacities of the contract documents except for departures that are identified in the submission.

2.2 LOW VOLTAGE POWER SYSTEMS

General

General: Provide a complete operational low voltage power system, comprising the following and as documented:

- Supply from network distributor.
- Metering.
- Consumers mains.
- Submains.
- Final subcircuits.

Submissions

Technical data: Submit documentation to fully describe the proposed installation. As a minimum provide:

- Single line diagram(s).
- Fault levels at switchboards.
- Maximum demand calculations.
- Cable and conductor cross sectional area and insulation type.
- Submain cable routes and support or enclosure method.
- Switchboard cupboard layouts including risers.
- Busduct systems including routes, dimensions and connection details.
- Certify compliance with AS/NZS 3000, for electrical services.

Accessories

General: Provide the following and as documented:

- General power outlets.
- Isolating switches.
- Three phase outlets.

Wiring systems

Standard: To AS/NZS 3013.

Selection: Provide wiring systems appropriate to the installation conditions and the function of the load.

Thermal insulation: In walls filled with thermal insulation, install cables in PVC conduit.

Power cables

General: Copper cable generally, multi-stranded except for MIMS.

Minimum size:

- Lighting subcircuits: 1.5 mm^2.
- Power subcircuits: 2.5 mm^2.
- Submains: 6 mm^2.

Voltage drop: Install final subcircuit cables within the voltage drop parameters dictated by the route length and load.

Fault loop impedance: Provide final subcircuit cables selected to satisfy the requirements for automatic disconnection under short-circuit and earth fault/touch voltage conditions.

Dummy load tests

General: Where electrical tests are required and the actual load is not available, provide a dummy load equal to at least 75% of the design load.

2.3 SWITCHBOARDS

General

General: Provide proprietary switchboards to the following and as documented:

- Main switchboard.
- Distribution boards.

Rated short-circuit currents: Design for the maximum prospective symmetrical r.m.s. current values at rated operational voltage, at each assembly incoming supply terminal, excluding effects of current limiting devices.

Standards

Standard: To AS/NZS 3439.1 and AS/NZS 3439.3.

Statutory authority's equipment

General: Refer to network distributor service rules to determine their requirements. Install equipment supplied by the network distributor, and provide wiring to complete the installation.

Rated short-circuit currents

General: The rated fault capacity of the assembly enclosure, busbars and outgoing protective devices is equal to the fault level of the system at the assembly.

Busbars

General: Incorporate proprietary insulated busbar systems for the interconnection of isolators, circuit breakers and other circuit protective devices.

Earthing

General: Make provision for connection of communications systems CET at switchboard earth bar to AS/ACIF S009.

Doors

General: Provide lockable doors with a circuit card holder unless enclosed in cupboards or in an area which is not readily accessible to the public.

IP rating

General: IP52 minimum.
Weatherproof: IP56 minimum.

Finishes

Interior: White.

Exterior: Manufacturers standard finish.

Supporting structure

General: Wall mounted for proprietary switchboards.
Floor mounted: Assemblies > 2 m^2.

Ventilation

General: Required to maintain design operating temperatures at full load.

2.4 SWITCHBOARD COMPONENTS

Protective devices

General: Select and adjust protective devices to grade and coordinate for overcurrent, and earth faults.

Switch-isolator and combination fuse-switch units

Standard: To AS/NZS 60947.1 and AS/NZS 3947.3.

Rated current: To suit unit installed in enclosure.

Rated fault capacity: Provide units selected for short-circuit making capacity that is at least the fault level at assembly incoming terminals.

Breaking capacity: At least the rated full load current.

Rated duty: Uninterrupted in non-ventilated enclosure.

Operation: Independent manual operation including positive *'ON/OFF'* indicator.

Locking: Provide for padlocking in the *'OFF'* position.

Handles: Removable only when switch is in open position.

Fuse links: Isolated when switch contacts are open.

Moulded case and miniature circuit breakers

Moulded case breakers: To AS/NZS 60947.1, AS 2184 and AS 60947.2.

Miniature circuit breakers: To AS/NZS 60898.1 or AS 3111.

Trip type:

- Moulded case breakers: adjustable thermal, fixed magnetic.
- Miniature circuit breakers: Fixed thermal, fixed magnetic.

Current limiting: Moulded case breakers: required.

Fault capacity ≥ 10 kA: To AS 60947.2 and AS/NZS 60947.1.

Fault capacity < 10 kA, current rating < 100 A: Miniature overcurrent circuit breakers to AS/NZS 60898.1 or AS 3111

Mounting: Mount circuit breakers so that the '*ON/OFF*' and current rating indications are clearly visible with covers or escutcheons in position. Align operating toggles of each circuit breaker in the same plane.

Clip tray chassis: For miniature overcurrent circuit breakers provide clip tray assemblies capable of accepting single, double, or triple circuit breakers, and related busbars. Provide moulded clip-on pole fillers for unused portions.

Residual current devices

Integral type: Incorporate earth leakage in circuit breaker protection operation. To AS/NZS 61009.1.

Maximum tripping current: 30 mA.

Fuses with enclosed fuse links

Standards: To AS/NZS 60269.1, AS/NZS 60269.2.0 and AS/NZS 60269.2.1.

Fault level: Provide fuses suitable for the fault level at the assembly, and which discriminate with other protective equipment.

Let-through energy and peak cut-off current: To suit protected equipment.

Utilisation category: Distribution/general purpose: gG.

Fuse-holders: Mount fuse-holders so that fuse carriers may be withdrawn directly towards the operator and away from live parts. Provide fixed insulation which shrouds live metal when the fuse carrier is withdrawn.

Barriers: Provide barriers on both sides of each fuse link, preventing inadvertent electrical contact between phases by the insertion of screwdriver.

Fuse links: Enclosed, high rupturing capacity type mounted in a fuse carrier. If necessary for safe removal and insertion of the fuse carrier, provide extraction handles. Mount on clips within the spares cabinet.

Identification: Clearly indicate Australian manufacturer or distributor.

Contactors

Standard: To AS/NZS 60947.4.1.

Rated operational current: Full load current of the load controlled.

Minimum rating: 16 A.

Contacts life: 1 million operations at AC-3 or DC-3.

Mounting: Mount with sufficient clearance to allow full access for maintenance, removal and replacement of coils and contacts, without the need to disconnect wiring or remove other equipment.

Auxiliary contacts: Provide auxiliary contacts with at least one normally-open and one normally-closed separate contacts with rating of 6 A at 230 V a.c.

Interconnection: Do not connect contactors in series or parallel to achieve ratings.

2.5 LIGHTING

General

General: Provide a complete operational lighting system, tested and commissioned.

Interior lighting standard: To AS/NZS 1680 Parts 0, 2.4 and 2.5, and AS 1680 Parts 1, 2.1, 2.2, 2.3 and 3.

Exterior lighting standard: To AS/NZS 1158 Parts 0, 1.1, 1.3 and 3.1, and AS 1158 Parts 2 and 4.

Proprietary equipment: Provide only proprietary luminaires, fittings and accessories.

Modifications and refurbishing: Carry out to the original manufacturer's standards.

Minimum energy performance standards

General: To AS/NZS 4783.2 and AS/NZS 4782.2.

Lamps

Lamps: Provide all luminaires complete with lamps and accessories.

Verify operation: Install lamps in all luminaries and verify correct operation before completion

Standards:

- Fluorescent: To AS 4782.1.
- Incandescent: To AS 2325.
- Tungsten halogen: To IEC 60357.

Low voltage lamps: Provide lamps strictly in accordance with the luminaire manufacturer's recommendation.

Dichroic lamps: Provide dichroic lamps with integral reflector.

Lighting control system

General: Provide the following as documented:

- Lighting switches.
- Dimmers.
- Automatic control systems.

Documentation: Provide complete technical and operational documentation for the lighting control system.

Installation

Supports: Mount luminaires on proprietary supports by means of battens, trims, noggings, roses or packing material to suit location.

Completion

General: Verify the operation of all luminaires. Replace lamps which have been in service for a period > 50% of the lamp life as published by the lamp manufacturer.

2.6 EMERGENCY EVACUATION LIGHTING

General

General: Provide a complete operational monitored, emergency evacuation lighting system, tested and commissioned in accordance with AS/NZS 2293 and as documented.

Single-point system luminaires

Visual indicator lights: Provide a red indicator, readily visible when the luminaire is in its operating location, which indicates that the battery is being charged.

Inverter system: Provide protection of the inverter system against damage in the event of failure, removal or replacement of the lamp, while in normal operation.

Local test switches: Provide a momentary action test switch, accessible from below the ceiling, on each luminaire to temporarily disconnect the mains supply and connect the battery to the lamp.

Common test switches: Provide a common test switch on the distribution board which disconnects main supply to the luminaries and tests for discharge performance, after testing, this switch must automatically revert to normal operating mode.

Monitored system

Data connection: Provide internal monitoring facilities and provision for the connection of data cabling to a central monitoring computer where required for this project.

Proprietary systems: Use only proprietary systems with full compatibility between the monitoring system, operating software, and the luminaries selected.

Batteries

Type: Lead-acid or nickel-cadmium batteries capable of operating each lamp at its rated output continuously at least 2 hours during completion tests and 1.5 hours during subsequent tests.

Battery life: At least 3 years when operating under normal conditions at an ambient temperature of 25ºC and subjected to charging and discharging at 6 monthly intervals.

Marking: Indelibly mark each battery with its date of manufacture.

Power supply to single-point systems

General: Provide an unswitched active supply to each luminaire and exit sign, originating from the test switch control panel.

Data monitoring for single-point systems

General: Provide a data cable system from each single-point luminaire connected to the monitoring computer.

2.7 TELECOMMUNICATIONS CABLING

General

General: Provide a complete operational telecommunications cabling system, tested and commissioned in accordance with AS/NZS 3080, AS/ACIF S009, SAA HB 29 and as appropriate SAA HB 252.

Accomodation: Provide accommodation for telecommunications cabling infrastructure complying with AS/NZS 3084 including the detailed requirements of Appendix ZA, ZB and ZC. Include the following as documented:

- Building distributor.
- Backbone cabling.
- Floor distributors.
- Consolidation points.
- Horizontal cabling.
- Telecommunications outlets.
- Fly leads.

System requirements

Application class to AS/NZS 3080 clause 6.3: E.

Balanced system to AS/NZS 3080 clause 7 (data): Category 6.

Balanced system to AS/NZS 3080 clause 7 (voice): Category 6.

Conformance: Certify the design and installation for conformance with AS/NZS 3080 in accordance with the detailed requirements of clause 4.

System warranty: Warrant the specified communications cabling performance for a minimum of 15 years.

Equipment racks

Type: 19 inch rack.

Free standing racks: Provide adjustable feet.

Modular connector patch panels

Terminations: Terminate directly to the modular connector.

Patch cords: Terminate cord ends with appropriate registered jacks.

Optical fibre termination panels

Break out trays: Provide fibre optic cable break out trays at each group of fibre optic cable terminations.

Loom cables: Neatly loom cables and lay stripped cables into the break out tray.

Secure cables: Ensure that cables are secured by the sheath and that there is no stress on the fibre optic cores.

Patch cords

General: Provide terminated patch cords for 100% of the total incoming and outgoing ports used.

Records

Record book: Provide a record book at each cross connect.

Records in pencil: Complete the records in pencil for each termination and jumper, providing origin and destination and type of service.

Location: Secure log books in each distribution frame records holder.

Identification and labelling, and record documentation: To AS/NZS 3085.1.

Cable separation

Low voltage cables: Separate telecommunications cables not enclosed in conduits or ducts from low voltage services by at least 150 mm.

Electromagnetic interference (EMI): Provide clearance to minimise the effect of EMI where communications cables are installed parallel and adjacent to power cables carrying loads in excess of 200 A.

Installation

Crossover: Install cables neatly and without crossovers between cables.

Loom size: Loom cables into groups not exceeding 50 cables, and hold looms in place using reusable cable ties at least 20 mm wide. Do not exert compressive force on the cables when installing cable straps.

Telecommunications outlets

Outlets: Provide RJ45 8 way modular jacks except where documented otherwise.

Pinouts: The pinouts vary with the application. Determine required pinouts before making cable terminations.

Fly leads

General: Provide fly leads to 50% of the outlets installed.

Earthing system

Communication earth system (CES): Provide a communications earth terminal (CET) associated with the local protective earth (PE) system adjacent to each electrical distribution board.

2.8 AUTOMATIC FIRE DETECTION

General

General: Provide a fully operational, system, tested and commissioned in accordance with the AS 1670 series and AS 7240.

General: Provide equipment listed in the CSIRO CMSE ActivFire Register of Fire Protection Equipment.

Base station monitoring system connection

Standard: To AS 7240.21.

Connection: Connect the installation to the fire alarm monitoring base station via telecommunications carrier lines.

Installation wiring

Conductor size: ≥ 1.5 mm^2 TPI 230 V rated, with red and white insulation.

Sheathing: Red.

Control and indicating equipment

General: To AS 7240.2.

Air-handling fire mode control panels: To AS 4428.7.

Alarm investigation facility (AIF): To AS 4428.10.

Alarm signalling equipment: To AS 4428.6.

Wire-free alarm zone circuits: To AS 4428.9.

Fire indicator panels

General: Provide metal cubicle-type enclosures.

Isolation

General: Provide isolating facilities on fire indicator panels to enable tests to be carried out without the transmission of alarm signals to the fire brigade.

Detectors

Duct sampling units (DSUs): To AS 1603.13.

Heat detectors: To AS 7240.5.

Integral heat detector/alarm units: To AS 1603.3.

Point type smoke detectors: To AS 1603.2.

Multi-point aspirated smoke detectors: To AS 1603.8.

Optical beam smoke detectors: To AS 1603.7.

Integral smoke detector/alarm units: To AS 12239.

Self-indicating detectors

General: Provide a light emitting diode mounted in a clearly visible position, which illuminates whenever detector operation causes an alarm condition to register on the fire indicator panel. Provide self-indicating devices which, if faulty, will not render the detector inoperative under fire conditions.

Mounting positions of light emitting diodes:

- Visible detectors: On the outside of the detector or its base.
- Detectors concealed above ceilings: On the underside of the ceiling immediately below the detector.
- Detectors in other concealed spaces: On a visible panel close to the entry to the concealed space housing the detector.

Installation

General: Install detectors so they can be easily inspected and tested in situ, and readily withdrawn for service.

Integral smoke detector/alarm units: To AS 1670.6.

Manual call points

Standard: To AS 1603.5.

External alarm indication

Circuits: To AS 4428.1.

Strobe lights: To AS 1603.11.

Magnetic door holders

Standard: To AS 4178.

Control facilities

General: Provide ancillary control device circuits and connections for automatically controlling and releasing magnetic door holders to operate the relevant doors under fire alarm conditions.

Fire fan control and indication panels

General: Provide fire detection and alarm signals for the fire fan control panel to be incorporated by mechanical services.

2.9 EMERGENCY WARNING AND INTERCOMMUNICATION SYSTEM

General

General: Provide a complete operational emergency warning and intercommunication system, tested and commissioned in accordance with AS 1670.4.

Accredited products: Provide equipment listed in the CSIRO CMSE ActivFire Register of Fire Protection Equipment.

Loudspeakers

Mounting: Securely fix to building elements. Flush mount in suspended ceilings and lift cars, and if practicable elsewhere; otherwise surface mount in an enclosure.

Wall mounting height: 150 mm below finished ceiling level.

Evacuation zones

Zones: Provide separate zones for each fire compartment, or a separate zone for each single storey.

Emergency intercommunications

Warden intercommunication points: Connect, as separate circuits, warden intercommunication point (WIP) handsets which are in the same zone.

Conferencing: Provide switching facilities which permit conference calls, between up to 5 warden intercommunication points, to be initiated from any emergency control panel.

Lift cars: Provide a terminal block outside the lift motor room. Cable from the terminal block to central control equipment. Provide a warden intercommunication point handset in each fire lift car.

Marking: Permanently mark with unique circuit or serial numbers, concealed.

2.10 ACCESS CONTROL

General

General: Provide a complete operational access control system, tested and commissioned in accordance with AS/NZS 2053 and AS/NZS 2201.1, *AS 2201.3 and AS/NZS 2201.5, as applicable.

Processors or panels

Capacity: Provide separate entry/exit control modules for each designated door.

Users: Program the system to match the number of authorised users with unique access codes.

Time zones: At least 4 per day, with provision for weekends and public holidays.

Door control devices

General: Provide electric strikes, electric locks, drop bolts, or similar devices to suit door construction and hardware.

Fail-safe: Connect door control devices in a fail-safe mode to permit egress in the event of power failure.

Authorised products: Provide equipment listed in the ActivFire Register of Fire Protection Equipment.

Glass doors: Provide tumbler, drop bolts or magnetic holders.

Double leaf doors (solid frame): Provide an electric strike or lock on the fixed leaf, connected to the door frame by concealed flexible wiring.

Activation

General: Provide keypads, card readers or other activation devices, and locate next to entry points.

External: Provide weatherproof (IP56) hoods or housings for external units.

Default mounting height: 1100 mm from floor level.

Vehicle control

Vehicle access control: Provide a vehicle access control system combining connection to vehicular doors and boom gates, and interconnection to the main access control system.

Exit Loop detection: Provide a buried loop detection system adjacent to the exit point to activate boom gates or vehicular doors on approach by a vehicle. Connect so that doors or gates close after a pre-set time.

Interlock: Provide a photo electric beam safety interlock.

Interlock function: To prevent door or gate from closing until the vehicle has cleared the exit point.

Push-buttons and readers: Where practicable, provide direct wall mounting for push-buttons or readers; otherwise provide a mounting bollard and extension arm.

Default mounting height: 1000 mm from floor level.

Reed switches: Provide heavy duty reed switches on both sides of vehicle doors, which generate a door closed indication at the control panel.

Intercom

Base station: Provide an intercom base station at each external entry point, interconnected with the individual local stations. Include speakers and microphones.

Construction: Wall mounted flush stainless steel panel.

Weatherproofing: IP56.

Dial: Digital push-button type.

Schedule: Provide a weatherproof (IP56) schedule holder and card identifying individual local stations. Locate next to the intercom panel.

Local station: Provide wall mounted intercom local stations, interconnected with the base stations and external entry points.

Type: Surface mounted, removable handset type.

Operation: Provide an audible tone device to indicate that the individual station is being called, and a press-to-talk switch so that the local station can communicate with the base station only when the switch is held down.

Door control: Provide integral momentary action door release switches to operate the door release or opening mechanisms at each external entry point.

Interconnection to other services

General: Provide card readers or other devices to allow the interconnection to other systems as required. Provide and connect wiring to the designated services.

2.11 TELEVISION DISTRIBUTION SYSTEM

General

General: Provide a complete operational analogue and digital television distribution system, tested and commissioned in accordance with AS/NZS 1367.

System design and performance: To AS/NZS 1367.

Network operators

Free-to-air bands: Provide a system suitable for the reception of all local Free-to-air services:

Cable: Arrange with the cable network operator for the connection to their cable network. Comply with the cable network operators' requirements.

Local: Provide video input sockets at the premises cabling head-end for the distribution of three in-house video channels on the Free-to-air network.

Performance criteria

General: Performance to AS/NZS 1367.

2.12 LABELLING

General

General: Provide labels including control and circuit equipment ratings, functional units, notices for operational and maintenance personnel, incoming and outgoing circuit rating, sizes and origin of supply and kW ratings of motor starters.

Identifying labels

General: Provide labels fixed to access panels, doors, covers and escutcheon panels and internal equipment, indicating the relevant worksection and component.

Single-line diagrams

Custom-built assemblies: Provide single-line diagrams.

Format: Non-fading print, at least A3 size, showing the situation as installed.

Mounting: Enclose in a non-reflective PVC frame and wall mount close to assembly.

Marking cables

General: Identify the origin of all wiring by means of legible indelible marking.

Identification labels: Provide durable labels fitted to each core and sheath, permanently marked with numbers, letters or both to suit the connection diagrams.

Identify multicore cables and trefoil groups at each end with durable non-ferrous tags clipped around each cable or trefoil group.

Telecommunications and television cabling

General: Label telecommunications cables. cross connects, outlets, in accordance with the requirements of AS/NZS 3080, and SAA HB 29 Figures 5-18.

Labels: Label cables to indicate the origin and destination of the cable. Label outlets to show the origin of the cross connect, the workstation or outlet number, and the port designation.

Location marking

General: Accurately mark the location of underground cables with route markers consisting of a marker plate set flush in a concrete base.

Location: Place markers at each joint, route junction, change of direction, termination and building entry point and in straight runs at intervals of not more than 100 m.

Concrete bases: 200 mm diameter x 200 mm deep, minimum.

Direction marking: Show the direction of the cable run by means of direction arrows on the marker plate. Indicate distance to the next marker.

Plates: Brass, aluminium or mild steel hot-dipped galvanized minimum size 75 x 75 x 1 mm thick.

Plate fixing: Waterproof adhesive and 4 brass or stainless steel countersunk screws.

Marker height: Set the marker plate flush with paved surfaces, and 25 mm above other surfaces.

Marker tape for electrical services: Where electric bricks or covers are not provided over underground wiring, provide a 150 mm wide yellow or orange marker tape bearing the words '*WARNING – electric cable buried below*', laid in the trench 150 mm below ground level.

Labelling – minimum lettering heights

Main assembly designation: 25 mm.

Distribution assembly designations: 15 mm.

Small proprietary distribution boards: 10 mm.

Main switches: 10 mm.

Outgoing functional units: 8 mm.

Identifying labels (on outside of cabinet rear covers): 4 mm.

Danger, warning and caution notices: 10 mm for main heading, 5 mm for remainder.

Other labels including equipment labels within cabinets: 3 mm.

Label colours

Generally: Black lettering on white background except as follows:

- Main switch and caution labels: Red lettering on white background.
- Danger, warning labels: White lettering on red background.

Fixing

General: Fix labels securely.

Fixing methods: Use screws and double-sided adhesive. Fixed in extruded aluminium sections attached to panels with rivets or countersunk screws.

Aluminium labels: Aluminium or monel rivets.

Restrictions: Do not use self-tapping or thread-cutting screws.

Permanent fixing: Fix labels permanently in place.

Label fixing table

Component	Fixing scheme	Type
Cables	Origin and destination	Self adhesive – wrap on
Cross connects	Port number	Proprietary
Outlets	SAA HB 29 Figs 5-18	Engraved plate
Wall boxes	SAA HB 29 Figs 5-18	Engraved adhesive label
Patch cords	Type of service	Colour code

0911 CABLE SUPPORT AND DUCT SYSTEMS

1 GENERAL

1.1 AIMS

Responsibilities
General: Provide cable support, trunking and duct systems as documented.

1.2 CROSS REFERENCES

General
General: Conform to the *General requirements* worksection.

Associated worksections
Associated worksections: Conform to the following:
- *Electrical general requirements.*

1.3 SUBMISSIONS

Shop drawings
General: Submit shop drawings showing the following:
- Cable tray and trunking routes.
- Layout of cable supports and enclosures on the current architectural background coordinated with the structure and other services.
- Layout of underground conduits, pits and drainage trenches.
- Invert levels for underground conduits.
- Depth of burial for cables and conduits.
- In situ pits.
- Provision for expansion and ground movement.
- Fabricated columns.
- Footing for columns.

Technical data
General: Submit technical data for the following:
- Ducted wiring enclosure systems.
- Cable support systems.
- Proprietary pits.
- Proprietary columns.
- Load calculations for aerial cable supports.

2 PRODUCTS

2.1 CONDUITS

General
Standards: AS/NZS 2053 Parts 1, 2, 3, 4, 5, 6, 7 and 8.

Type
General: Rigid.

Sizes
Conduits: ≥ 20 mm.

Underground: ≥ 25 mm.

Conduits for telecommunications: ≥ 25 mm.

Fixings
Saddles: Double sided fixed.

Colour
Conduits for telecommunications systems: White.

Galvanized water pipe
Medium or heavy: To AS 1074.

2.2 METALLIC CONDUITS AND FITTINGS

General
Standards: AS/NZS 2053.7 or AS/NZS 2053.8.

Type
General: Screwed steel.

Fixings
Saddles:
- Internal: Zinc plated.
- External: Hot-dipped galvanized.

Corrosion protection
Steel conduits: Paint ends and joint threads with zinc rich organic primer to AS/NZS 3750.9.

2.3 NON-METALLIC CONDUITS AND FITTINGS

General
Standards: Non-metallic conduits and fittings: AS/NZS 2053 Parts 2, 3, 4, 5 or 6.

Solar radiation protection: Required for exposed conduits and fittings.

Flexible conduit
General: Provide flexible conduit to connect with equipment and plant subjected to vibration. If necessary, provide for adjustment or ease of maintenance. Provide the minimum possible length.

Associated fittings
Type: The same type and material as the conduit.

Wall boxes on UPVC conduits: For special size wall boxes not available in UPVC, provide prefabricated earthed metal boxes.

Inspection fittings
General: Provide inspection-type fittings only in accessible locations and where exposed to view.

Joints
Type: Cemented or snap on joints.

2.4 CABLE DUCT/TRUNKING

General
Standards:
- Cable duct/trunking systems: To AS/NZS 4296.

Cable duct
Material: Metal.

Material finish: Metallic-coated to AS 1397 Grade G2, Coating Class Z275.

Construction: Solid.

Covers:
- Accessible locations: Screw-fixed or clip-on type removable only with the use of tools.

Accessories: Purpose-made to match the duct system.

Cable support: Except for horizontal runs where the covers are on top, support wiring with retaining clips at intervals of not more than 1000 mm.

Proprietary trunking systems

General: Provide proprietary, skirting duct, wall duct, floor duct and service column systems, incorporating segregation where used for multiple services. Provide rigid supports. Round off sharp edges and provide bushed or proprietary cable entries into metallic trunking.

Accessories: Provide proprietary fixings and mountings facilities for accessories and outlets.

Covers: Screw-fixed or clip-on type removable only with the use of tools.

2.5 CABLE TRAY/LADDER SUPPORT SYSTEMS

General

System: Provide a complete cable support system consisting of trays or ladders and including brackets, fixings and accessories.

Selection: Run cables < 13 mm diameter on cable trays or in ducts.

Standard: NEMA VE-1.

Type tests: To NEMA VE-1.

Manufacture: Provide proprietary trays, ladders, fittings and accessories from a single manufacturer for the same support system.

Selection: Select cable tray/ladder in conjunction with support system installation to achieve the documented loading and deflection requirements.

Spare capacity: ≥ 50%.

Support:

- Power cables: Trapeze or centre rail structure.
- Communications cables: Single sided.

Dimensions: To the preferred dimensions nominated in NEMA VE-1.

Material: Corrosion-resistant finished steel.

Material finish: Metallic-coated to AS 1397, Grade G2, Coating Class Z275.

Covers: Provide ventilated flat covers to cable trays/ladders installed in accessible locations.

2.6 CATENARY SYSTEMS

General

Catenary systems: May be used within suspended ceiling spaces in lieu of cable tray and ladder systems.

Wire: Provide stainless steel or coated galvanized cable and couplings for catenary systems.

2.7 CABLE PITS

General

Cable draw-in pits: Provide. Sizes given are internal dimensions.

Proprietary cable pits

Pits ≤ 1200 x 1200 mm: Provide proprietary concrete or polymer moulded pits.

In situ construction

Pits > 1200 x 1200 mm: Provide either:

- Proprietary cable pits.
- Construct walls and bottoms from rendered brickwork or 75 mm thick reinforced concrete. Incorporate a waterproofing agent in the render or concrete.

Pit covers

General: Provide pit covers to suit external loads. Fit flush with the top of the pit.

Standard: To AS 3996.

Weight: < 40 kg for any section of the cover.

Lifting handles: Provide a lifting handle for each size of cover section.

Drainage

General: Provide drainage from the bottom of cable pits, either to absorption trenches filled with rubble or to the stormwater drainage system.

Absorption trenches: Minimum size 300 x 300 x 2000 mm.

2.8 COLUMNS

General

Columns: Conform to the following for fabricated columns more than 2400 mm high which are designed to support accessories outdoors.

Standards: Comply with the following standards as appropriate:

- AS 1798 for public lighting poles.
- AS 3600 for concrete structures.
- AS 4100 for steel structures.
- AS/NZS 4676 for structural design of columns.
- AS 4680 for hot-dipped galvanized (zinc) coatings on ferrous articles.

2.9 POWER POLES

General

Material: Hardwood.

Service connection: Provide pole mounted equipment including weatherproof box and service fuses at the service connection point as required by the Network Distributor.

Design

Standards: To the local Network Distributors standards and to the local Service and Installation Rules.

Hardwood poles

Selection: Dressed, natural, round poles with all sapwood removed.

Capping: Galvanized steel, domed cap extending 25 mm down the sides. Fix with galvanized steel nails.

Treatment: Provide termite and fungus treatment to 600 mm above ground level.

Hardwood crossarms

Material: 75 x 75 x 1500 minimum hardwood.

Fixing: Securely fix to pole with M20 galvanized bolts, nuts and washers.

Bracing: Provide two 5 x 40 x 690 galvanised steel fixed at 45 degrees to the pole below the cross arm with M12x75 galvanized coach screws in the pole

and M12 galvanized bolts, nuts and washers in the crossarms.

Design

General: Provide columns designed, manufactured and tested by a specialist manufacturer.

Footings: To be designed by an accredited structural engineer and independently certified.

Site specifics: Take into consideration the design wind category and the soil conditions.

Dimensions: To AS 1798.

Construction

General: Hot-dip galvanize columns and fittings after fabrication.

Bases: Provide columns with mounting bases for fixing to reinforced concrete footings via rag bolt assembly.

Rag bolt assembly: Holding bolts to be cut within 3 threads above top of base plate top lock nuts.

Base fixing: Galvanized holding down nut with galvanized lock nut above.

Base sealing: Seal space under pole base plate with grout.

Finish: Paint, colour as documented.

Accessory mountings: Provide adjustable mountings, to suit accessories. Include provision for rigidly clamping each item in position, once adjusted correctly.

Maintenance access: Provide pole stirrups secured to either side of the column for access to accessories. Locate the first stirrup ≥ 3 m above ground level.

Electrical connections: Provide a recess fitted with a flush mounted cover at the base of the column for access to cable connections and equipment.

Cable support: For connections higher than 3 m provide a catenary wire cable support system.

3 EXECUTION

3.1 UNSHEATHED CABLES – INSTALLATION

General

General: Provide permanently fixed enclosure systems, assembled before installing wiring. Provide draw wires to pull in conductor groups from outlet to outlet, or provide ducts with removable covers.

3.2 CONDUIT SYSTEMS – INSTALLATION

Set out

General: If exposed to view, install conduits in parallel runs with right angle changes of direction.

Bends

General: Install conduits with the equivalent of ≤ 2 right angled bends per cable draw-in run.

Conduits in roof spaces:

General: Locate below roof insulation and sarking. In accessible roof spaces, provide mechanical protection for light-duty conduits.

Inspection fittings

General: Locate in accessible positions.

Draw cords

General: Provide 5 mm^2 polypropylene draw cords in conduits not in use.

Draw-in boxes

General: Provide draw-in boxes as follows:

- Spacing: < 30 m.
- At changes of level or direction.

Underground draw-in boxes: Provide casketed covers and seal against moisture. Install in accessible pits.

Expansion

General: Allow for thermal expansion/contraction of conduits and fittings due to changes in ambient temperature conditions. Provide expansion couplings as required.

Rigid conduits

General: Provide straight long runs, smooth and free from rags, burrs and sharp edges. Set conduits to minimise the number of fittings.

Routes

General: Run conduits concealed in wall chases, embedded in floor slabs or installed in inaccessible locations directly between points of termination, minimising the number of sets. Do not provide inspection fittings.

Conduits in concrete slabs

Route: Do not run in concrete toppings. Do not run within pretensioning cable zones. Cross pretensioning cable zones at right angles. Route to avoid crossovers and minimise the number of conduits in any location. Space parallel conduits ≥ 50 mm apart.

Minimum cover: The greater of the conduit diameter and 20 mm.

Fixing: Fix directly to top of the bottom layer of reinforcing.

Hollow-block floors

Locate conduits in the core-filled sections of precast hollow-block type floors.

Columns

Conduits in columns:

- ≤ 4 per column.
- ≤ 25 mm diameter.
- Locate conduits centrally in each column.

Bends: Enter columns via ≥ 150 mm radius sweep bends. Do not use elbows.

Chasing: Do not chase columns.

3.3 CABLE TRAY/LADDER SUPPORT SYSTEMS – INSTALLATION

General

Standard: To NEMA VE-2.

Design: Support cable trays/ladders to achieve the following:

- Concealed trays/ladders: Support spacing ≤ length of tray/ladder section.
- Visible trays/ladders: Loaded deflection ≤ span/350.

Fixing to building structure

General: Fix supports to the building structure or fabric by means of ≥ 8 mm threaded rod hangers attached to hot-dipped galvanized U-brackets, or by means of proprietary brackets.

Cable fixing

General: Provide strapping or saddles suitable for fixing cable ties.

MIMS cables: provide non-magnetic straps.

Bend radius

General: Provide bends with an inside radius ≥ 12 times the outside diameter of the largest diameter cable carried.

Cable protection

General: Provide rounded support surfaces under cables where they leave trays or ladders.

Access

General: Locate trays and ladders to provide ≥ 150 mm free space above and ≥ 600 mm free space on at least one side.

Clearances

From hot water pipes: > 200 mm.

From boilers or furnaces: > 500 mm.

EMI: Locate support systems for electrical power cabling and communication cabling to minimise electromagnetic interference.

3.4 CATENARY SYSTEMS – INSTALLATION

General

Anchoring: Anchor catenary systems to the structure. Do not fix to any part of a suspended ceiling system.

Design loads: Provide catenary systems designed to support the proposed load of the cables with a spare capacity of 50% loading.

Fixing: Fix cables to the catenary system such that no cable is under stress due to tension or compression. Use proprietary fixings that allow cables to be added or removed without destroying the integrity of the system.

3.5 CABLES IN TRENCHES – INSTALLATION

Sand bed and surround

General: Provide clean sharp sand ≥ 150 mm around cables and conduits installed underground.

Sealing ducts and conduits

General: Seal buried entries to ducts and conduits with waterproof seals. Seal spare ducts and conduits immediately after installation. Seal other ducts and conduits after cable installation.

3.6 COLUMNS – INSTALLATION

General

General: Install columns as documented including the provision of in situ reinforced concrete footings to the **Wiring enclosures and cable support systems schedule**.

3.7 POWER POLES – INSTALLATION

General

Standards: To the Service and Installation Rules and to the standards published by the local Network Distributor for the project environment and for the selected aerial arrangement.

Hardwood poles

Burying depth: 1600 mm minimum.

Support: Baulk and stay to suit the design loads.

Cable protection: Provide protection for cables and conduits installed on the exterior of the pole to a height of 2000 mm above and 150 mm below ground using either galvanized water pipe or 3.2 mm thick hot dipped galvanized channel.

0921 LOW VOLTAGE POWER SYSTEMS

1 GENERAL

1.1 AIMS

Responsibilities
General: Provide low voltage power systems as documented.

1.2 SYSTEM DESCRIPTION

Network supply
General: Liaise with the Network Distributor and provide network connection as documented.

Programme: Schedule the works and statutory inspections to suit the construction programme.

Embedded generator supplies
General: Provide embedded generator supplies as documented.

Distribution system
General: Provide power distribution system elements as documented.

Metering
Retail: Provide metering to the requirements of the principal, the selected electricity retailer and the network distributor.

Private: Provide private metering as documented.

Design
Design responsibilities: Refer to the definition of 'provide' in the *General requirements* worksection.

Design parameters: As documented.

Fault protection: Automatic disconnection to AS/NZS 3000 clause 2.4.

Maximum demand: Calculation method to AS/NZS 3000 Appendix C.

1.3 CROSS REFERENCES

General
General: Conform to the *General requirements* worksection.

Associated worksections
Associated worksections: Conform to the following:

- *Electrical general requirements.*
- *Cable support and duct systems.*

1.4 STANDARDS

General
General: To SAA HB 301.

Electrical equipment: To AS/NZS 3100.

Fire and mechanical performance classification: To AS/NZS 3013.

Selection of cables: To AS/NZS 3008.1.1.

Distribution cables: To AS/NZS 4961.

Testing
Standard: To AS/NZS 3017.

1.5 INTERPRETATIONS

Abbreviations
General: For the purposes of this worksection the abbreviations given below apply.

- MIMS: Mineral-insulated metal-sheathed.

Definitions
Embedded generator: Electricity generator connected to the local electrical distribution network.

Extra-low voltage: Not exceeding 50 V a.c. or 120 V ripple-free d.c.

Low-voltage: Exceeding extra-low voltage, but not exceeding 1000 V a.c. or 1500 V d.c.

High voltage: Exceeding low-voltage.

1.6 SUBMISSIONS

Samples
General: Submit samples of all visible accessories and equipment.

Technical data
General: Submit the following information for each main, submain and final subcircuit for which calculation is the responsibility of the contractor.

- Single line diagram.
- Fault Levels at switchboards.
- Maximum demand calculations.
- Cable and conductor cross sectional area and insulation type.
- Cable operating temperature at design load conditions.
- Voltage drop calculations at design load conditions.
- Protective device characteristics, e.g. curves, I^2t.
- Discrimination and grading of protective devices.
- Prospective short circuit current automatic disconnection times.
- Earth fault loop impedance calculations for testing and verification.
- Certify compliance with AS/NZS 3000, for electrical services.
- Stringing calculations for aerial cables.

Final subcircuits: May be treated as typical for common route lengths, loads and cable sizes.

Shop drawings
General: Submit shop drawings of the following:

- Cable routes.
- Busduct systems including routes, dimensions and connection details.

2 PRODUCTS

2.1 WIRING SYSTEMS

General
Selection: Provide wiring systems appropriate to the installation conditions and the function of the load.

2.2 POWER CABLES

Standard

PVC and XLPE cables: To AS/NZS 5000.1.

Aerial cables: To AS 1746.

Cable

General: Select multi-stranded copper cable generally, except for mineral insulated metal sheathed (MIMS).

Minimum size:

- Lighting sub-circuits: 1.5 mm^2.
- Power sub-circuits: 2.5 mm^2.
- Sub-mains: 6 mm^2.

Voltage drop: Select final subcircuit cables within the voltage drop parameters dictated by the route length and load.

Fault loop impedance: Select final subcircuit cables selected to satisfy the requirements for automatic disconnection under short circuit and earth fault/touch voltage conditions.

Underground residential distribution systems: Select cables according to AS/NZS 4026.

Distribution cables: To AS/NZS 4961.

Conductor colours

General: For fixed wiring, provide coloured conductor insulation. If this is not practicable, slide at least 150 mm of close fitting coloured sleeving on to each conductor at the termination points.

Active conductors in single phase circuits: Red.

Active conductors in polyphase circuits:

- A phase: Red.
- B phase: White.
- C phase: Blue.

2.3 BUSDUCTS

Systems

Type: Proprietary type-tested systems made up of integral lengths and fittings containing solid busbar conductors and housings, assembled in sections to form complete fully enclosed and insulated low impedance power distribution systems.

Standard: To AS 3439.2.

Selection

Ratings: Provide busduct selected to meet nominated current ratings and, if used as consumer's mains, to match the statutory authority's substation equipment.

Degree of protection: For complete assembly, at least the following:

- Indoor use: IP40.
- Weatherproof (partial exposure): IP54.
- Outdoor use: IP55.

Indoor system accessories

For current ratings ≤ 400 A: Provide fuse, fuse switch or circuit breaker type plug-in connection boxes. Provide interlocks to enable plug-in boxes to be safely installed or removed on an energised system. Provide plug-in boxes whereby earthing to the busduct housing is achieved before connection of active conductors.

For current ratings > 400 A: Provide bolt on accessible T-off boxes.

Expansion joints: Provide expansion joints in vertical runs, to allow for expansion and contraction of the busduct system.

End caps: Provide end caps or covers to fully enclose ends of busducts not connected to equipment.

2.4 ACCESSORIES

General purpose socket outlets

Standard:

- General: To AS/NZS 3112.
- Industrial: To AS/NZS 3123.

Pin arrangement: Mount outlets with the earth pins at the 6 o'clock position.

Plugs – 230/400 volt

General: Provide plugs with integral pins of the insulated type to AS/NZS 3112.

Permanently connected equipment

General: Provide final subcircuit to permanently connected equipment, as documented.

Isolation: Provide isolating switch adjacent to equipment.

Coordination: Coordinate with equipment supplier.

Wall/ceiling mounted equipment: Conceal final cable connection to equipment.

Isolating switches

Standard: To AS/NZS 3133.

Emergency stop switches

Standard: To IEC 60947-5-5.

3-phase outlets

Construction: Surface mounted type of high-impact resistant plastic, with flap lid on the outlet.

Minimum: 20 A, 400 V a.c.

Pin arrangement: Five round pins mounted with earth pins at the 6 o'clock position, neutral pins in the centre and the red, white and blue phases in a clockwise sequence when viewed from the front of the outlet.

Plug: Provide a matching plug top for each outlet.

Appliances

General: Provide appliances, as documented.

Connection: Shorten lead to minimum length for plug connections.

Ceiling sweep fans

Standard: To AS/NZS 60335.2.80.

Horizontal clearance: ≥ 1200 mm from blade tip to wall cupboards or shelves that require access by ladder or steps.

Size: 1200 mm diameter unless otherwise documented.

Mounting height: Use longest proprietary suspension rod to ensure that height from blades to finished floor level: > 2200 mm.

Speed regulators, capacitive and electronic: Flush mounted with OFF position.

3 EXECUTION

3.1 EARTHING

Earthing systems
Standard: Provide an earthing system as documented.

Electrodes
General: Provide electrodes to suit soil resistivity.

Bonding
General: Provide bonding to AS/NZS 3000 clause 5.6.

Earth and bonding clamps
General: Provide proprietary earthing and bonding clamps.

Standard: To AS 1882.

3.2 MINERAL INSULATED METAL SHEATHED CABLE (MIMS)

General
General: Maintain manufacturer's seals until joint or termination is made. Remove moisture by heating cable ends.

Seals
Temporary seals: Fit temporary seals to the open ends of cables cut and not immediately used.

Terminations: Fit termination seals at ends of cable runs as soon as the cable has been cut to length, stripped back, and the moisture driven out.

Through joints: Same fire-rating as the cable.

Sheath earthing
General: If MIMS cables enter metal enclosures, earth sheaths to non-ferrous plates secured to the enclosures. Where sheaths terminate at plates, fully insulate, colour code, and fix the conductors to the enclosures.

Bonding
General: Bond metal sheaths of single core cables in multi-phase circuits with proprietary earth bonding clips or clamps.

Separation
General: Separate MIMS cables from tough plastic sheathed (TPS) cables and UPVC conduits by at least 25 mm.

Eddy currents
General: Arrange single core cable entries into non-ferrous metal gland plates to minimise eddy currents.

Vibration
Connections with vibrating equipment: Loop cables in a complete circle next to the point of connection.

MIMS cable terminations
MIMS cable systems: Test the insulation resistance as follows:

- At the time of termination.
- 24 hours later.

3.3 POWER CABLES

General
Standard: Classifications to AS/NZS 3013.

Handling cables: Report damage to cable insulation, serving or sheathing.

Stress: Ensure that installation methods do not exceed the cable's pulling tension. Use cable rollers for cable installed on tray/ladders or in underground enclosures.

Straight-through joints: Unless unavoidable due to length or difficult installation conditions, run cables without intermediate straight-through joints.

Cable joints: Locate in accessible positions in junction boxes and/or in pits.

Extra-low voltage circuits: Individual wiring of extra-low voltage circuits: Tie together at regular intervals.

Tagging
General: Identify multi core cables and trefoil groups at each end with stamped non-ferrous tags clipped around each cable or trefoil group.

Marking
General: Identify the origin of all wiring by means of legible indelible marking.

3.4 FIRE-RATED (OTHER THAN MIMS)

Protection
General: If exposed to mechanical damage, provide protection to AS/NZS 3013.

3.5 COPPER CONDUCTOR TERMINATIONS

General
General: Other than for small accessory and luminaire terminals, terminate copper conductors to equipment, with compression-type lugs of the correct size for the conductor. Compress using the correct tool or solder.

Within assemblies and equipment
General: Loom and tie together conductors from within the same cable or conduit from the terminal block to the point of cable sheath or conduit termination. Neatly bend each conductor to enter directly into the terminal tunnel or terminal stud section, allowing sufficient slack for easy disconnection and reconnection.

Alternative: Run cables in UPVC cable duct with fitted cover.

Identification: Provide durable numbered ferrules fitted to each core, and permanently marked with numbers, letters or both to suit the connection diagrams.

Spare cores: Identify spare cores and terminate into spare terminals, if available. Otherwise, neatly insulate and neatly bind the spare cores to the terminated cores.

3.6 ALUMINIUM CONDUCTOR TERMINATIONS

General
Conductor surface preparation: Remove oxide as follows:

- Wire brushing surfaces to be connected.
- Immediately applying oxidation inhibiting abrasive grease containing zinc or similar particles. Thoroughly cover the surfaces and work the

grease between the strands of stranded conductors.

Fittings: Unless joint contact surfaces are factory tinned or factory pre-filled with oxidation inhibiting abrasive grease, prepare as for conductors.

Aluminium-to-aluminium jointing

Compression method:

- Provide aluminium or aluminium alloy crimp lugs or ferrules selected to suit the size and shape of the conductors.
- Use compression dies selected to suit lugs or ferrules, with hexagonal dies for stranded conductors and indent dies for solid conductors.
- Fill lugs or ferrules with oxidation inhibiting abrasive grease.
- Insert conductors into lugs or ferrules, driving out excess grease.
- Apply dies to provide at least 2 indentations at each joint or termination.

Fusion weld method: Make joints by fusion welding with aluminium lugs. Protect cable insulation from heat by fixing substantial heat sinks to the cable near the joint. After completion of the weld, wire brush the joint and file sharp projections smooth.

Aluminium-to-copper jointing

Method: Use compression method, as for **Aluminium-to-aluminium jointing**.

Connector types: Select from the following:

- Bi-metal: Lug or pin type with cast copper palm or pin, friction welded to an aluminium barrel section, subsequently factory filled with oxidation inhibiting abrasive grease.
- Case electro-tinned aluminium lug: Bolt the palm of the lug to the copper busbar or terminal by means of a stainless steel bolt and nut with a large diameter stainless steel flat washer and a spring cup washer.

3.7 AERIAL CABLES – POWER

Aerial cables

Tension: String and tension cables to meet the project specific design criteria.

Aerial connection – poles

For change of direction < 10 degrees: Pin insulators mounted on horizontal cross arms.

For change of direction ≥ 10 degrees: Shackle insulators secured by hooks on poles and bolts on crossarms or elsewhere.

Bundled conductors: To AS 3766.

Aerial connection – building attachment

General: Provide proprietary up-stands, as required.

Attachment: Shackle insulators and supports securely bolted to building structure.

Building entry: Angle conduit upwards at a minimum angle of 45 degrees for weather proofing.

3.8 BUSDUCT INSTALLATION

General

Standard: To AS/NZS 3439.2.

Horizontal runs: Support bus ducts at maximum intervals of 2 m, with adjustable hangers and steel angle supports. Provide runs that are straight and level. Install hangers at least 300 mm from joint centres. Secure bus ducts to angle supports with proprietary clamps.

Vertical runs: Support with a combination of fixed and spring type hangers to allow for expansion and contraction of the bus duct system.

Fittings: Provide elbows, offsets and junctions for changes in direction. If necessary, provide weatherproof covers and gaskets.

3.9 COMPLETION TESTS

Site tests

Inspection: Visually inspect the installation to AS/NZS 3000 before testing. Submit record on a checklist.

Test and verify the installation to AS/NZS 3000 Section 8 using the methods outlined in AS/NZS 3017. Record and submit the results of all tests.

Dummy load tests

General: Where electrical tests are required and the actual load is not available, provide a dummy load equal to at least 75% of the design load.

3.10 SPARE PARTS

General

Spare parts: As documented.

0931 POWER GENERATION – DIESEL

1 GENERAL

1.1 AIMS

General

General: Provide proprietary packaged stand-by generating set(s) as documented, incorporating the following:

- Engine cooling system.
- Combustion air system.
- Exhaust system.
- Liquid fuel system.
- Acoustic enclosure.
- Control system.
- Connection to low voltage power system.

1.2 CROSS REFERENCES

General

General: Conform to the *General requirements* worksection.

Associated worksections

Associated worksections: Conform to the following:

- *Liquid fuels*.
- *Electrical general requirements*.
- *Low voltage power systems*.
- *Switchboards – proprietary*.
- *Switchboards – custom-built*.
- *Switchboard components*.

1.3 STANDARD

General

General: For the purpose of this worksection, compliance with the following standards relating to stand-alone systems are also applicable to those systems which are to be connected to the network supply:

- Stand-alone power systems: To AS/NZS 4509.1, AS/NZS 4509.2 and AS/NZS 4509.3.

Standard: To AS/NZS 3010.

1.4 INTERPRETATIONS

Definitions

Net continuous rated output (or prime rating): Net continuous electrical output available at alternator terminals, not including the electrical power consumed by the generating set's dependent and essential auxiliaries.

Net short-time rated output (or stand-by rating): Net electrical output available from the generating set for 1 hour in every 12 hours at net continuous rated output, not including electrical power consumed by the generating set's dependent and essential auxiliaries.

Start response time: Total elapsed time from receipt of start signal to final connection to load.

1.5 PRE-COMPLETION TEST

Factory inspection

Requirement: Give sufficient notice so that inspection may be made of each complete generating set and associated systems at the manufacturer's or supplier's factory before delivery to the site.

1.6 SUBMISSIONS

Technical data

General: Submit technical data including the following:

- Technical description and specifications of each generating set, including output curves for base load and stand-by conditions, alternator and engine data, automatic voltage regulator, synchronising and load sharing modules and auxiliaries.
- Type test reports as follows:
  . Generating sets.
  . Alternators: To AS 1359.101.
- Net continuous rated output.
- Net short-time rated output.
- Transient and subtransient reactance of the alternators.
- Voltage regulation grade.
- Generating set efficiency at 50%, 75% and 100% load.
- Calculations for performance of acoustic enclosures and silencers.
- Evidence that the engine type has previously passed cold starting tests at the minimum ambient site temperature.

Shop drawings

General: Submit shop drawings indicating the following:

- General arrangement of equipment, generating sets, fuel tanks, exhaust silencers, control panels, batteries, cable tray runs.
- Single line schematic showing the interconnection with the building electrical system.
- Operating sequence in test and emergency modes as well as restoration of normal supply.
- Location and size of fuel tanks.
- Physical size of exhaust silencers including clearances from other system, building and structural elements.
- Physical size of generating set base and clearances for maintenance.
- Location and estimated size of control and distribution boards.
- Location of control and starting batteries.
- Acoustic performance criteria (engine, exhaust, air flow), to determine the level of sound proofing required.
- Maximum mass and overall dimensions of each separable assembly.

- Access clearances for operational maintenance and dismantling.
- Electrical single line diagram, and general arrangement for the complete system.
- Control diagrams.
- Alarms and shutdown annunciator text engraving schedule.
- Details of foundations and anti-vibration mountings.

2 PRODUCTS

2.1 GENERAL

Multiple generating sets

General: For multiple generating sets operating in parallel, provide generating sets of the same make and type.

Mounting

General: Mount the engine and alternator units on a common structural steel frame to support the generating set assembly and the engine local control board.

Coupling

General: Directly couple the engine and generator shafts with a self-aligning type coupling, capable of transmitting the engine maximum output torque under operating conditions, including starting and overload.

2.2 ALTERNATORS

General

Standards: To AS 1359 Parts 0, 30, 31, 101, 102.1, 102.2, 107, 109, 114 and IEC 60034-5 and 60034-12.

Voltage waveform: Sinusoidal, with total wave form deviation not exceeding 10%.

Excitation: Provide self-regulated brushless type exciters.

Overspeed: Withstand a speed of 1.2 times unit rated speed for both alternator and engine.

Alternator underspeed withstand: Normal operation at net continuous rated output at a speed of 0.95 times unit rated speed, without overheating.

Sustained short-circuit withstand: At least 2.5 times full load steady state short-circuit current, for at least 5 s.

Number of poles: 4.

Enclosure classification: IP21, with screened ventilation openings.

Cooling method classification: Class IC 01, to AS 1359.106.

Insulation classification: Thermal class 180 (H), to IEC 60085.

Anti-condensation heaters

General: Provide at least 2 anti-condensation heaters within the winding enclosure.

Rating: Rate heaters to maintain the windings and insulation at least 6°C above ambient temperature when the alternator is at rest and one heater is in service.

Location: Locate a heater at each end of alternator windings in a position which allows heat transfer to the winding insulation by convection, without exceeding maximum allowable insulation temperature. Do not fix heaters to windings.

Terminations: Connect heaters to separate identified terminals within a separate accessories terminal box which is connected to a permanent supply.

Connection diagram: Provide a connection diagram for the heaters. Locate within the terminal box.

Winding thermistors

General: Provide thermistors to alternator stator windings.

Standard: To AS 60947.8.

Thermistor type: Positive temperature coefficient.

Thermistor temperatures:

- Engine shutdown: 160°C.
- Winding temperature high pre-alarm: 140°C.

Terminal boxes

Construction: Provide metal terminal boxes. Size to allow the current transformers, power and control cables and cable lugs to be neatly installed and terminated with necessary clearances between live parts and the box, and without placing undue strain on termination points.

Supply cable terminal box: Provide removable lid and side covers.

Terminals: Provide star connected windings. Bring both ends of each winding out to separate terminals. Establish a neutral terminal.

Sealing: Provide neoprene or bonded cork gaskets between terminal boxes and their frames and covers.

2.3 ENGINES

General

Sizing: Take into account the nature of loads including auxiliaries, harmonics and transient operation.

Bearings: Provide front and rear main bearings, so that crankshaft alignment is not affected by dismantling of the alternator.

Governing

General: Provide electronic or mechanically controlled governors which enable engines to operate continuously at 1480 r/min from no-load to the maximum rated electrical load connected to the alternator. Provide filters which ensure that harmonics or switching spikes generated by the load do not interfere with the operation of the governor, overspeed or underspeed cut out devices.

Governing accuracy: Class M3, to AS 4594.

Governor adjustments: Provide adjustment settings for the following:

- Speed droop.
- Stability.
- Maximum speed.
- Acceleration rate.
- Load gain.

2.4 FUEL STORAGE

General

General: Conform to *Liquid fuels.*

2.5 CONTROLS

General

General: Provide automatic and manual modes to start and shut down generating sets in the selected sequence and, if operating in parallel, share the load to optimise their rated kW and kVAR capacities.

Manual sequence control

General: Provide controls to manually, start, synchronise and shut-down each generating set. Include emergency stop, synchroscope, meters, selector switches, check synchroniser and status indicating lights.

Automatic start control

General: Provide for the following:

- When a 'start' signal is received, generating sets start automatically, come on-line and, if appropriate synchronise before connecting to the load.
- Connection of alternators for sequential control of load sharing/shedding.
- Shutdown of alternate machines.

Automatic engine shutdown

General: Provide for generating sets to run to suit the load demand until receipt of the mains 'restored' signal is received. At this point the automatic sequenced engine shutdown signal must be activated after an adjustable time delay of 0 – 30 min.

Engine shutdown

General: Provide a shutdown control system which disconnects the alternators, and shuts down engines upon the occurrence of fault conditions, such that:

- Engines cannot be restarted before safety devices have been manually reset and system alarm sensors have returned to the normal state.
- The overspeed shutdown acts directly to disconnect the fuel supply independent of the governor.
- The shutdown control system may be reset by the operation of one reset switch, after safety devices have been manually reset.

Emergency and fault shutdown

General: Provide for the following conditions to register as audible and visible alarms and to cause each generating set main circuit breaker to open immediately and each generating set to immediately shutdown:

- Emergency stop push-button: Pressed.
- Generating set: Over voltage.
- Generating set protection: Activated.
- Generating set: Over current.
- Engine: Overspeed.
- Engine oil pressure: Low.
- Jacket water temperature: High.

Automatic synchronising

General: Provide synchronising modules which automatically synchronise each incoming alternator supply frequency and phase angle to the live busbars.

Emergency stop push-buttons

Generating sets < 2 m long: Provide one push-button per generating set.

Other generating sets: Provide 2 push-buttons per generating set. Locate one on each side or locate one of the push-buttons in the engine local control board.

Type: 40 mm diameter red, palm operated type mounted in a metal wall box fixed to a free standing U channel pedestal. Wire to disconnect the generator and immediately shut down the engine when the controls are in the automatic or manual mode.

2.6 CONTROL PANELS

General

General: Provide control panels, switchgear and controlgear assemblies to *Switchboards – custom built* , *Switchboard components* and as documented.

Equipment: Accommodate equipment operating in parallel and stabilise load sharing between each generating set at all load steps. Include reverse power interlock.

Engine local control board

General: For each generating set, provide the following:

- Key operated local engine start/stop control.
- Controls for auto/off/manual/load test.
- Emergency manual shutdown.
- Speed indicator, kW meter, frequency meter, ammeter, kVAR meter, power factor meter, and hours run meter.
- Indicator showing generating set under local control.
- Oil pressure indicator.
- Coolant temperature indicator.
- Undervoltage protection: Adjustable down to 90% rated voltage with time delay 0 to 10 s.
- Under frequency protection with two stages.
  . First stage: Adjustable 47 – 50 Hz with time delay 0 to 10 s.
  . Second stage: Adjustable down to 40 Hz and with instantaneous trip.
- Automatic voltage regulator consisting of the following:
  . Switch to select manual or automatic voltage control.
  . Solid-state type automatic voltage regulator.
- Under and overvoltage sensing.
- Power transducers.
- Over and underspeed sensors.

Alternator output control: For overload or fault protection provide the following:

- Type.

- Rating.
- Closing e.g. hand closing or power-assisted closing if the device is a circuit-breaker.
- Overload protection e.g. integral or separate relay.
- Tripping voltage supply. Only if separate tripping voltage supply is required.

Alternator voltage control:

- Manual control adjustment.
- Automatic voltage regulator:
- Voltage adjustment.
- Set point adjustment.

2.7 BATTERIES AND CHARGERS

General

General: Provide separate batteries and charger systems for the following:

- Engine start.
- Control and alarm functions.

Standards

Engine start batteries: To AS/NZS 4029.1, AS 4029.2 or AS 4029.3.

Battery chargers: To AS 4044.

Control and alarm batteries: To AS 3731.1, AS 3731.2, AS/NZS 4029.2 or AS 4029.3.

Starting batteries

Location: Locate in proprietary battery holders attached to the generating set, or on purpose-built stands next to the set and constructed of timber or other corrosion resistant material. Isolate batteries from vibration.

Covers: Provide a high-impact resistant transparent cover for each battery.

Capacity: Sufficient to crank the engine for 3 successive attempted starts, repeated at 5 min intervals.

Isolator: Provide a lockable isolator to prevent accidental starting.

Starting batteries chargers

General: Select the charger to suit the batteries supplied.

Mains power: Connect chargers to the mains power to ensure that power is maintained to the charger under all supply conditions.

Alarm outputs: Provide the following local audible and visual alarms together with facilities for extending them via a common alarm output to a remote location:

- Mains off.
- Over voltage.
- Over current.
- Low battery voltage.
- Insufficient charge rate.

Control and alarm batteries

Location: Segregate battery and charger equipment from generator control equipment.

Capacity: Sufficient to supply full generating set control, monitoring and alarm functions for a period of 48 hours, and then operate circuit breaker and transfer devices for 10 consecutive open-trip-close cycles with mains supply off and at minimum ambient temperature.

Chargers – control and alarm batteries

General: Select the charger to suit the batteries supplied.

Alarm outputs: Provide the following local audible and visual alarms together with facilities for extending them via a common alarm output to a remote location:

- Mains off.
- Over voltage.
- Over current.
- Low battery voltage.
- Insufficient charge rate.

2.8 STARTING

Electric starting

General: Provide starter motors, batteries and chargers, and associated control equipment to automatically start each engine.

Wiring: Wire starter motors so that starter motor solenoid contacts are on the active side and field windings are at earth potential when the motor is de-energised. Provide an interlock, connected directly to the engine, to prevent the starter motor operating when the engine is running.

Starting interlock: Provide a starting lock out system which prevents further starting attempts after 3 successive unsuccessful attempts.

2.9 ACOUSTIC ENCLOSURES

General

General: Provide weatherproof acoustic enclosures to surround generating sets, including inlet and outlet sound attenuators.

Sound pressure level limit

General: 85 dB (A) at 12 locations 1 m from the enclosure exterior surface, at 1.5 m above floor or roof levels, measured with the generating set operating at constant maximum rated full load output, with doors closed and service penetrations sealed.

Dimensions

General: Size enclosures to accommodate diesel engine inlet and outlet attenuators and permit an unobstructed walkway at least 600 mm wide between the generating set and internal face of the enclosure.

Doors

General: Provide doors of same material as the enclosure. Provide door stays to each door.

Ventilation

General: Provide ventilation to the enclosure so that:

- With generating sets running at full rated output the enclosure temperature rise does not exceed 10°C.
- Hazardous concentrations of toxic or explosive fumes and gases are prevented.

2.10 MARKING

Rating plates

Temperature-rise limits: If temperature-rise limits are achieved by de-rating an oversized generator, state the de-rated value.

Alternator mass: State alternator mass.

Thermistor detector identification and warning plates

Thermistors: Provide details of thermistor type classification and reference temperature.

Warning: Provide a warning engraved in 4 mm high lettering as follows:

- WARNING – Do not apply more than 2.5 V across the protection thermistor devices.

Anti-condensation heater identification and warning: Locate next to heater terminals. State the number, voltage and power rating of the heaters, and the following separate warning engraved in red letters on a white background:

- WARNING – Anti-condensation heater. Circuit is live when the set is off.

Auxiliary wiring

Ferrules: Provide to wiring ends identifying each conductor.

Engine direction of rotation

General: If driving shafts or associated rotating parts are accessible, clearly and permanently mark the direction of rotation on an adjacent fixed surface.

Rotation identification: Provide a label within the supply cable terminal box identifying the relationship between the direction of rotation and the marking of terminals.

Charger enclosure markings

General: Provide enclosure with the following:

- Manufacturer's rating plates.
- Markings to AS 4044.

Plate material: Stainless steel.

3 EXECUTION

3.1 GENERAL

Plinths

General: Provide reinforced concrete plinths for floor mounted equipment, sized to suit equipment footprints.

Resilient mounts

General: Provide at least 6 resilient mounting blocks between the frame and the plinth.

Drip trays

General: Provide removable drip trays under those parts of the assembly where fuel or lubricant leakage may occur. Provide overflow outlet pipes taken to a point where a receptacle can be fitted under the pipe outlet.

Capacity: At least 1.5 times the oil capacity of the engine sump.

Material: 1.6 mm galvanized steel with brazed joints and rolled edges.

3.2 PERMANENT TEST LOAD

General

General: Provide a permanent, fan cooled, resistive test load connected to the generating set control panel.

Arrangement: Enclose test load resistors and fan and associated switchgear and controls in 2 segregated enclosures within a common ventilated sheet metal enclosure.

Degree of protection:

- Indoor locations: IP41.
- Outdoor locations: IP55.

Rating: At least 50% rated output of combined generating sets.

Resistor bank: 415 V, 3 phase, delta connected, stainless steel finned, sheathed element type. Interconnect resistors with nickel plated copper links supported on stand-off insulators. Arrange resistor banks to suit switched load steps.

Resistor bank switching: Switched in at least 3 equal load steps, from the generating set control panel.

Internal wiring:

- Connection to elements: 150°C silicon rubber insulation.
- General internal wiring: V-90HT insulation.

Circuit breakers: Provide a main circuit breaker to connect the alternator supply and individual circuit breakers for each resistor group.

Protection: Provide a thermal overload relay for fan motor protection. Provide safety interlocks to disconnect the load if ventilation air flow is restricted or resistor temperature limits are exceeded.

Fan run-on: 5 min after load disconnection.

Remote monitoring: Provide outputs for remote monitoring of the following:

- Load step indication.
- Fan run-on.
- Common alarm for fan motor overload, air flow restriction, and safety interlock operation.

3.3 ENGINE COOLING

General

General: Provide a cooling system consisting of radiators, fans and pumps.

Cooling air ductwork: Connect the cooling air outlet to generator room cooling air outlet.

3.4 ENGINE AIR INTAKE

General

Filters: Provide dry type air intake filters of sufficient capacity to permit continuous engine operation for 200 hours before filter servicing becomes necessary. Provide filter manometers.

Ductwork: To AS 4254.

Fans: Provide a fan selected for the installed system air pressure drop. Include power absorbed by the fan under site operating conditions when calculating generator output.

3.5 EXHAUST SYSTEM

General

General: Provide exhaust piping from the engine complete with silencers, piping, ductwork, supports and expansion devices.

Exhaust piping

Material: Grade 321 Stainless steel.

Diameter: Match engine exhaust manifold connection.

Connections: Provide flanged connections to silencers and pipe interconnections.

Vibration isolation: Provide a stainless steel flexible connection to the engine.

Weatherproofing

General: Provide weatherproof flashing, sleeves and acoustic seals where the exhaust system penetrates the roof or external walls.

Exhaust drainage

General: Grade the exhaust line away from the engine to drainage pockets, or connect to a suitable drainage outlet.

Exhaust pipe insulation

General: Insulate the full length of exhausts within buildings.

Insulation Material: Mineral wool, suitable for temperatures up to 260°C.

Maximum thermal conductivity: 0.036 W/m.K at 20°C.

Minimum thickness: 50 mm.

Application: Wrap insulation around exhaust pipes. Hold in place with 12 mm x 0.55 mm zinc-coated steel straps at 600 mm maximum centres.

Sheathing: Sheath insulation as follows:

- Sheathing not exposed to weather: 0.55 mm metallic-coated steel sheet.
- Sheathing exposed to weather: 0.55 mm metallic-coated steel sheet or 0.8 mm (minimum) aluminium sheet.
- Joints: Lap joints in sheathing at least 30 mm and rivet or screw at 150 mm maximum centres.
- Edges: Neatly cut around nozzles and cone down to flanges.
- Terminations: At terminations, return edges of sheathing to protect edges of insulation.

3.6 FUEL SYSTEM

General

General: Comply with the *Liquid fuels* worksection.

Fuel connections

Fuel piping and associated auxiliary equipment: To AS 1940.

Stop valves

General: Provide stop valves on the inlet to, and outlets from, the daily service tank.

3.7 COMPLETION

Completion tests

General: For each generating set carry out the following:

- Check tightness of connections and securing devices.
- Verify correctness of operation of protection devices and systems including sensor settings. Simulate actual conditions as far as possible, in order to test responses to faults imposed.
- Functional checks to AS 4594.1 Table 7, List C, items C1 to C5 inclusive.
- Cold start with the engine having been at rest for the previous 24 hours, timed from receipt of mains failure signal to acceptance of full rated load in 3 load steps to within the limits of output voltage and frequency.
- Continuous operational trial consisting of:
  . 4 hours at 100% rated power.
  . 1 hour at 110% rated power.
  . 30 min at 75% rated power.
  . 30 min at 50% rated power.
- Record fuel consumption for each step of the continuous trial.
- Sample engine oil from engine sump before and after tests. Perform laboratory analysis and submit a report on each oil sample.
- Continuous operational trial: During the trial, measure the following at maximum intervals of 30 minutes:
  . Generator kW and kVAR output.
  . Generator output voltage.
  . Generator output current.
  . Generator output frequency.
  . Power factor.
  . Oil pressure and water temperature.
  . Electrical power requirements of continuously running electric motor driven ancillaries.
  . Each battery charger current and voltage readings.
  . Noise level.

Synchronisation and load sharing tests: For generating sets running in parallel perform tests to verify automatic synchronisation and load sharing including the following:

- Sequence start and shutdown of each generating set.
- Parallel operation of generating sets.
- Synchronising of generating sets.
- Equal load sharing of kW and kVAR over 5 equal load steps.
- Neutral switching sequence and operation, where provided.
- Operation of controls, switchgear and auxiliaries.

Temporary test loads

General: Provide test loads including power and control wiring, ancillary equipment and test instruments to achieve the kW, kVAR and necessary load steps.

Reports

General: Submit reports from manufacturers or suppliers verifying the performance of safety and control functions of each system.

Maintenance
Call out: Respond to call outs for breakdowns or other faults requiring corrective maintenance. Attend on site within 24 hours of notification. Rectify faults and replace faulty materials and equipment.

0933 POWER GENERATION – PHOTOVOLTAIC

1 GENERAL

1.1 AIMS

General
General: Provide photovoltaic generating system(s) as documented, incorporating the following:
- Photovoltaic array.
- Regulator.
- Battery system.
- Inverter.
- Connection to low voltage power system.

Design
Irradiation data: Australian Bureau of Meteorology.

System provider
Requirement: The system provider is to be accredited by the Clean Energy Council of Australia.

1.2 CROSS REFERENCES

General
General: Conform to the *General requirements* worksection.

Associated worksections
Associated worksections: Conform to the following:
- *Electrical general requirements*.
- *Low voltage power systems*.
- *Cable support and duct systems.*
- *Switchboards – proprietary*.
- *Switchboards – custom-built*.
- *Switchboard components*.
- *Lightning protection.*

1.3 STANDARD

General
General: For the purpose of this worksection, compliance with the following standards relating to stand-alone systems are also applicable to those systems which are to be connected to the network supply:
- Stand-alone power systems: To AS/NZS 4509.1, AS/NZS 4509.2 and AS/NZS 4509.3
- Grid connected systems: To AS 4777.1, AS 4777.2 and AS 4777.3
- IEC 61836

1.4 INTERPRETATIONS

Definitions
General: To AS 4509.2

1.5 SUBMISSIONS

Rebate application
General: Provide complete and timely application documentation for a grant under the appropriate Rebate Programme.

Technical data
General: Submit technical data including the following:
- Technical description and specifications of each component.
- Calculations and assumptions for all selections and systems.
- Type test reports.

Shop drawings
General: Submit shop drawings indicating the following:
- General arrangement of equipment.
- Single line schematic showing the interconnection with the building electrical system.
- Access clearances for operational maintenance and dismantling.
- Electrical single line diagram, and general arrangement for the complete system.
- Control diagrams.
- Support details.

2 PRODUCTS

2.1 GENERAL

General
Selection: To meet the system requirements as documented.

Marking: To AS/NZS 5033

2.2 PHOTOVOLTAIC MODULE

General
Selection: To AS 4509.2, AS 5033 and as documented.

Array
Encapsulation: Required.

Toughened glass: Required.

Protection rating: ≥ IPX6.

Integral bypass diode protection: Required.

Cells
Type: Crystalline.

Standard: To IEC 61215

Efficiency: ≥ 12%.

2.3 REGULATOR

General
Selection: To AS 4509.2 and as documented.

Function: Charge cycle control including:
- Low battery voltage disconnect.
- Pulse width modulation.
- ≥ 3 step series regulation.

Display: LCD display of:
- Battery voltage.
- Charge current.
- Ampere hours in and out.
- Load current.

Alarms: Visible and audible low and high battery voltage alarms.

Transient protection: Required.

2.4 BATTERY SYSTEM

General
Selection: To meet the documented performance.

Blocking diodes: Required.

Service life: ≥ 10 years.

Standards
AS 2676, AS 4086.1

2.5 INVERTER

General
Selection: To meet the documented performance.

Waveform: True Sine wave.

Waveform quality: To AS 4777.

Voltage regulation: ± 8%.

Harmonic distortion of output current:< 4%.

Frequency regulation: ± 1%.

Efficiency: ≥ 90% at 10% load.

Protection: Overload, short circuit and transient required.

Automatic no-load shutdown: required.

Display:
- Output power.
- Grid stability.

Standards
General: To AS 4777.2 and AS 4777.3.

Synchronisation
General: Provide self commutation modules which automatically synchronise the inverter supply frequency and phase angle to the low voltage network or other embedded generator system.

2.6 CONTROL SYSTEM

Control panel
General: Provide photovoltaic system control panels, switchgear and control gear assemblies to *Switchboards – custom built* , *Switchboard components* and as documented.

3 EXECUTION

3.1 INSTALLATION

General
Standard: To AS 5033.

Photovoltaic array
Location: As documented.

Orientation: Fixed to AS 4509.2.

Tilt: Fixed to AS 4509.2 and AS 4509.3.

Structure: To AS 1170.2.

Lightning protection: Connect to photovoltaic array support system.

Regulator
Location: Locate as documented.

Battery system
Standard: To AS 4086.2.

Location: Locate as documented.

Enclosure: To AS 4509.2.

Support: Mount in proprietary battery holders or on purpose-built stands constructed of timber or other corrosion resistant material.

Inverter
Location: Locate as documented.

Standard: To AS 4777.1.

Low voltage connection
General: Connect to low voltage power system as documented.

Surge diversion: Required.

Earthing
Standard: To AS 5033.

Support
Roof mounted plant and equipment:

- If a horizontal platform is required, or the area of the plant and equipment is extensive, seek the advice of a professional engineer for the documentation of a suitable platform.
- If balustrades or screening are required, seek the advice of a registered architect.
- For roof level support circumstances, if any of the following apply, seek the advice of a professional engineer:
  . The total load from any unit of plant or equipment exceeds 500 kg.
  . The load from a unit of plant or equipment to any single support point exceeds 100 kg.
  . The average loading of plant and equipment over the area extending 1 m on all sides beyond the plant and equipment exceeds 25 kg/m^2.
- If the roof slope is greater than 10 degrees, adopt the manufacturers' documented installation procedures, or seek the advice of a professional engineer.
- In all other cases, under each support point use treated timbers (90 mm x 45 mm) laid parallel to the span of the roof sheeting or the roof pitch extending to the first purlin, rafter or batten more than 1 m from the plant or equipment.

Ground level mounted plant and equipment:

- If the ground slope is greater than 15 degrees, or the area of the plant and equipment is extensive, seek the advice of a professional engineer for the documentation of a suitable slab or platform.
- If balustrades or screening are required, seek the advice of a registered architect.
- In all other cases, provide proprietary plastic or concrete supports installed with falls that achieve a raised, impervious and water shedding bearing surface.

3.2 COMPLETION

Completion tests
General: To AS 4509.3 and AS 5033.

Reports
General: Submit test reports from manufacturers or suppliers verifying the performance of safety and control functions of each system.

Maintenance
Stand alone power systems: Maintain the system to AS 4509.3 during the defects liability period.

Grid connected systems: Maintain the system to AS 5033 Appendix H during the defects liability period.

Call out: Respond to call outs for breakdowns or other faults requiring corrective maintenance. Attend on site within 24 hours of notification. Rectify faults and replace faulty materials and equipment.

Warranty
General: Provide manufacturers and installers warranties as documented.

0937 UNINTERRUPTIBLE POWER SUPPLY

1 GENERAL

1.1 AIMS

Responsibilities
General: Provide uninterruptible power supplies as follows and as documented.

1.2 CROSS REFERENCES

General
General: Conform to the *General requirements* worksection.

Associated worksections
Associated worksections: Conform to the following:

- *Electrical general requirements*.
- *Switchboards – proprietary.*
- *Switchboards – custom-built.*
- *Switchboard components.*

1.3 STANDARD

General
General: To AS 62040.2 and AS 62040.3.

Converters: To AS 60146.2.

Batteries: To AS/NZS 4029.2 or AS 4029.3.

Batteries installation: To AS/NZS 2676 series and AS/NZS 3011 series.

Authorities
EMC: Comply with the requirements of the Australian Communications and Media Authority.

1.4 INTERPRETATIONS

Abbreviations
General: For the purposes of this worksection the abbreviations given below apply.

- EMC: Electromagnetic compatibility.

Definitions
General: For the purposes of this worksection the definitions given below apply.

- Uninterruptible power supply (UPS): Battery operated static inverter system.

1.5 TESTS

General
Standard: To AS/NZS 62040.3.

Test loads
General: Supply reactive test loads including power, control wiring and ancillary equipment.

Function: To achieve the kW, and kV.Ar and load steps necessary to demonstrate and verify the designated steady state and transient frequency and voltage responses and waveform deviation tests.

Functional unit tests
Rectifier: Factory tests to AS/NZS 62040.3 and AS/NZS 60146.1.1.

Inverter: Factory tests to AS/NZS 62040.3 and AS/NZS 60146.2.

Switch: Factory tests to AS/NZS 62040.3 and AS/NZS 60146.1.1.

Monitoring and control: Factory tests to AS/NZS 62040.3.

Battery: Factory tests to AS/NZS 62040.3 clause 6.6.15, 6.6.16, and 6.6.17.

Battery: Capacity test to AS/NZS 4029.

Complete UPS
On-site tests: Provide ‘routine; and ‘optional’ tests to AS/NZS 62040.3 Table 4 in conformance with the **On-site tests schedule**.

EMC: To AS 62040.2.

Power line condition: Test input power factor and harmonic content on completed installation.

1.6 SUBMISSIONS

Design – documentation
Standard: Submit technical data to AS 62040.3.

Calculations: Submit calculated input power factor and harmonic content.

Shop drawings
General: Include the following:

- The UPS system general arrangement and layout with details of connections, circuit breakers, cable sizes, overall dimensions, weight, location of access doors, cable terminating locations, and necessary clearances.
- Functional block diagram.
- The general arrangement of the remote manual by-pass switch/cabinet and indication/alarm panel with details of installation requirements.
- Type and rating of equipment items.
- Battery layout and associated details.

2 EXECUTION

2.1 COMPLETION

Spares
General: Supply spare parts necessary to maintain the mean time to repair.

Storage: Package and label spare parts for long-term storage within the UPS room.

Completion tests
General: Test run the UPS system continuously connected to the test load, for at least 48 hours. Record line and load voltage, current frequency and temperature measurements.

2.2 MAINTENANCE

General: Respond to call outs for breakdowns or other faults requiring corrective maintenance. Attend on site within 24 hours of notification. Rectify faults, and replace faulty materials and equipment.

0941 SWITCHBOARDS – PROPRIETARY

1 GENERAL

1.1 AIMS

Responsibilities
General: Provide switchboards as follows and as documented.

1.2 CROSS REFERENCES

General
General: Conform to the *General requirements* worksection.

Associated worksections
Associated worksections: Conform to the following:
- *Electrical general requirements.*
- *Low voltage power systems.*
- *Switchboard components.*

1.3 STANDARDS

General
Standards: To AS/NZS 3439.3.

1.4 INTERPRETATIONS

Definitions
General: For the purposes of this worksection the definitions given below apply.
- Proprietary assemblies: Low voltage switchgear and controlgear assemblies available as a catalogue item, consisting of manufacturer's standard layouts and equipment.
- Rated currents: Rated currents are continuous uninterrupted current ratings within the assembly environment under in-service operating conditions.
- Rated short-circuit currents: Maximum prospective symmetrical root mean square (r.m.s.) current values at rated operational voltage, at each assembly incoming supply terminal, excluding effects of current limiting devices.

1.5 SUBMISSIONS

Product data for proprietary assemblies
General: Submit the following:
- Makes, types and model numbers of items of equipment.
- Type test certificates for components, functional units and assemblies including internal arcing-fault tests and factory test data
- Overall dimensions.
- Fault level.
- IP rating.
- Rated current of components.
- Number of poles and spare capacity.
- Mounting details.
- Door swings.
- Paint colours and finishes.
- Access details.
- Schedule of labels.

2 PRODUCTS

2.1 GENERAL

Busbars
General: Incorporate proprietary insulated busbar systems for the interconnection of isolators, circuit breakers and other circuit protective devices.

Earthing
General: Make provision for connection of communications systems CET at switchboard earth bar to AS/ACIF S009.

Doors
General: Provide lockable doors with a circuit card holder unless enclosed in cupboards or in an area which is not readily accessible to the public.

IP rating
General: IP42 minimum.
Weatherproof: IP56 minimum.

Finishes
Interior: White.

Exterior: Installed in cupboards, switchrooms and plant rooms: Manufacturers standard powder coated finish.

Exterior: Installed elsewhere: To non-standard selected powder coated colour.

Supporting structure
General: Wall mounted for proprietary switchboards.
Floor mounted: Assemblies > 2 m^2.

Ventilation
General: Required to maintain design operating temperatures at full load.

3 EXECUTION

3.1 GENERAL

Fixing
General: Before making inter-panel connections, fix assemblies and metering equipment enclosures into position, level and plumb.

Cable entries
General: Neatly adapt one or more cable entry plates, if fitted, to accept incoming cable enclosure. Provide the minimum number of entry plates to leave spare capacity for future cable entries. Do not run cables into the top of weatherproof assemblies.

Single core cables: Pass separately through non-ferrous gland plates. Do not provide metal saddles. Provide glands for all single core cables.

Cable enclosures
Cable enclosures: Continue cable enclosures to or into assemblies and fit cable entry plates so that the IP rating of the assembly and the fire rating of the cable are maintained.

Cable supports
Cable supports: Support or tie mains and submains cables within 200 mm of terminations. Provide cable

supports suitable for stresses resulting from short circuit conditions.

3.2 MAINTENANCE

General
Standard: To *AS 2467

0942 SWITCHBOARDS – CUSTOM-BUILT

1 GENERAL

1.1 AIMS

Responsibilities
General: Provide switchboards as follows and as documented.

1.2 CROSS REFERENCES

General
General: Conform to the *General requirements* worksection.

Associated worksections
Associated worksections: Conform to the following:

- *Electrical general requirements.*
- *Low voltage power systems.*
- *Switchboard components.*

1.3 STANDARD

General
Standards: To AS/NZS 3439.1.

1.4 INTERPRETATIONS

Abbreviations
General: For the purposes of this worksection the abbreviations given below apply.

- TTA: Type tested assemblies.
- NTTA: Non-type tested assemblies.
- PTTA: Partially type tested assemblies.

Definitions
General: For the purposes of this worksection the definitions given below apply.

- Custom-built assemblies: Low voltage switchgear and controlgear assemblies manufactured to order.
- Rated currents: Rated currents are continuous uninterrupted current ratings within the assembly environment under in-service operating conditions.
- Rated short-circuit currents: Maximum prospective symmetrical root mean square (r.m.s.) current values at rated operational voltage, at each assembly incoming supply terminal, excluding effects of current limiting devices.

1.5 TESTS

Routine tests
Standard: To AS 3439.1.

Assemblies: Electrical and mechanical routine function tests at the factory using externally connected simulated circuits and equipment.

Dielectric testing: NTTAs and PTTAs: 2.5 kV r.m.s. for 15 s.

1.6 INSPECTION

Notice

Inspection: Give sufficient notice so inspection may be made of the following:

- Fabrication and painting completed.
- Factory assembly completed, with busbars exposed and functional units in place.
- Assembly ready for routine testing.
- Assembly installed prior to connection.
- Assembly installed and connected.

1.7 SUBMISSIONS

Calculations

General: Submit detailed certified calculations verifying design characteristics.

Standard: To AS 3865 and AS 4388.

Type test data

General: Submit type test certificates for components, functional units and assemblies. Verify that type tests and internal arcing-fault tests, if any, were carried out at not less than the designated fault currents at rated operational voltage.

Alterations to TTAs: Submit records of alterations made to assemblies since the tests.

Routine tests

General: Submit reports.

Technical data

Calculations: Submit design calculations of non-type tested and non-proprietary busbar assemblies.

Shop drawings

General: Submit shop drawings showing:

- Types, model numbers and ratings of assemblies.
- Component details, functional units and transient protection.
- Detailed dimensions.
- Shipping sections, general arrangement, plan view, front elevations and cross-section of each compartment.
- Projections from the assembly that may affect clearances or inadvertent operation, such as handles, knobs, arcing-fault venting flaps and withdrawable components.
- Fault level and rated short circuit capacity characteristics.
- IP rating.
- Fixing details for floor or wall mounting.
- Front and back equipment connections and top and bottom cable entries.
- Door swings.
- External and internal paint colours and paint systems.
- Quantity, brand name, type and rating of control and protection equipment.
- Construction and plinth details, ventilation openings, internal arcing-fault venting and gland plate details.
- Terminal block layouts and control circuit identification.
- Single line power and circuit diagrams.
- Details of mains and submain routes within assemblies.
- Busbar arrangements, links and supports, spacing between busbar phases and spacing between assemblies, the enclosure and other equipment and clearances to earthed metals.
- Dimensions of busbars and interconnecting cables in sufficient detail for calculations to be performed.
- Form of separation and details of shrouding of terminals.
- Labels and engraving schedules.

2 PRODUCTS

2.1 CUSTOM-BUILT SWITCHBOARD CONSTRUCTION

General

General: Provide custom-built switchboards as documented.

Layout

General: Position equipment to provide safe and easy access for operation and maintenance. Group devices according to function.

Compartments: Separate shipping sections, subsections, cable and busbar zones, functional unit modules and low voltage equipment compartments by means of vertical and horizontal steel partitions which suit the layout and form of separation.

Form 1 enclosures: Separate into compartments by means of partitions at 1.8 m maximum centres.

Equipment on doors: Set out in a logical manner in functional unit groups, so it is accessible without the use of tools or keys.

Segregation

General: Segregate BCA emergency equipment from non-emergency equipment by means of metal partitions designed to prevent the spread of a fault from non-emergency equipment to emergency equipment.

Enclosure materials

General: Fabricate from sheet metal of rigid folded and welded construction. Obtain approval for non-welded forms of construction.

Material: Metallic-coated sheet steel to AS 1397.

Material thickness: Diagonal dimension < 900 mm:≥ 1.6 mm.

Diagonal dimension ≥ 900 mm:≥2.0 mm.

Coating class:

- Indoor assemblies: Z200.
- Outdoor assemblies: Z450.

Insect proofing

General: Cover ventilation openings with non-combustible and corrosion resistant 1 mm mesh.

Equipment mounting panels

General: To support the weight of mounted equipment.

Metallic panels: Construct from ≥ 3 mm thick metal with heavy metal angle supports or plates bolted or welded to enclosure sides.

Non-metallic panels: Provide non-metallic panels selected to suit the weight of the mounted equipment and design the mounting structure for stability and stiffness.

Non-metallic boards: To IEC 60893-1.

Equipment fixing

Spacing: Provide 50 mm minimum clearance between the following:

- Busbars for lifts, fire services and building emergency services.
- General installation services, busbars and equipment.

Mounting: Bolts, set screws fitted into tapped holes in metal mounting panels, studs or proprietary attachment clips. Provide accessible equipment fixings which allow equipment changes after assembly commissioning.

Installation: For lightweight equipment, provide combination rails and proprietary clips.

Earth continuity

General: Strip painted surfaces and coat with corrosion resistant material immediately before bolting to the earth bar. Provide serrated washers under bolt heads and nuts at painted, structural metal-to-metal joints.

Construction

Lifting provisions: For assemblies with shipping dimensions exceeding 1800 mm high x 600 mm wide, provide fixings in the supporting structure and removable attachments for lifting.

Supporting structure: Provide concealed fixings or brackets to allow assemblies to be mounted and fixed in position without removing equipment.

Floor-mounting: Provide mild steel channel plinth, galvanized to class Z600, with toe-out profile, nominal 75 mm high x 40 mm wide x 6 mm thick, for mounting complete assemblies on site. Drill M12 clearance holes in assembly and channel and bolt assemblies to channel. Prime drilled holes with zinc rich organic primer to AS/NZS 3750.9.

Ventilation: Provide ventilation to maintain design operating temperatures at full load.

2.2 CABLE ENTRIES

General

General: Provide cable entry facilities within assembly cable zones for incoming and outgoing power and control cabling. Provide sufficient clear space within each enclosure next to cable entries to allow incoming and outgoing cables and wiring to be neatly run and terminated, without undue bunching and sharp bends.

Cover and gland plates

Cover plates: Provide 150 mm maximum width cover plates butted together and covering the continuous cable entry slot.

Gland plates: Provide removable gland plates fitted with gaskets to maintain the degree of protection.

Materials: 1.5 mm thick steel, 5 mm thick composite material or laminated phenolic. 6 mm thick brass for MIMS cables and cable glands.

2.3 BUS TRUNKING SYSTEM ENTRY

General

General: Provide entry plates with close tolerance cut-out to accommodate busbars, fitted with a flange bolted and sealed to assembly enclosure to maintain assembly IP rating. Earth busway enclosure to assembly protective earth conductor. Fit busway flanges at assembly manufacturer's premises and retain for transportation.

2.4 DOORS AND COVERS

General

Provide lockable doors with a circuit card holder unless enclosed in cupboards.

Door layout

Maximum width: 900 mm.

Minimum swing: At least 90º.

Door stays: Provide stays to outdoor assembly doors.

Adjacent doors: Space adjacent doors to allow both to open to 90º at the same time.

Door construction

Protection: Provide single right angle return on all sides and fit suitable resilient sealing rubber to provide the documented IP rating and prevent damage to paintwork.

Hinges: Provide corrosion-resistant pintle hinges or integrally constructed hinges to support doors. For removable doors, provide staggered pin lengths to achieve progressive engagement as doors are fitted. Provide 3 hinges for doors higher than 1000 mm. Provide restraining devices and opposed hinges for non lift-off doors.

Door hardware: Provide the following:

- Corrosion resistant lever-type handles, operating a latching system with latching bar and guides strong enough to withstand explosive force resulting from fault conditions within the assembly.
- Dual, edge mounted, corrosion resistant T handles with provision for key locking cylinder.
- Captive, corrosion resistant knurled thumb screws.

Locking: Incorporate cylinder locks in the latching system. Key alike, 2 keys per assembly.

Door mounted equipment: Protect or shroud door mounted equipment and terminals to prevent inadvertent contact with live terminals, wiring, or both.

Earthing: Maintain earth continuity to door mounted indicating or control equipment with multi-stranded, flexible earth wire, or braid of equal cross-sectional area, bonded to the door.

Covers

Maximum dimensions: 900 mm wide and 1.2 m^2 surface area.

Fixing: Fix to frames with at least 4 fixings. Provide corrosion-resistant acorn nuts if the cover exceeds 600 mm in width. Rest cover edges on the cubicle

body or on mullions. Do not provide interlocked covers.

Handles: Provide corrosion resistant D type handles.

Escutcheons

General: For doors enclosing circuit breakers, provide escutcheon plates as barriers between operating mechanisms and live parts.

Escutcheon plates

General: Provide plates or removable covers with neat circuit breaker toggle cut-outs allowing interchangeability of 1, 2 and 3 pole circuit breakers. Provide corrosion-resistant lifting handles or knobs. Provide unused circuit breaker toggle cut-outs with blanking in-fill pole covers.

Maximum dimensions: 900 mm wide and 1.2 m^2 surface area.

2.5 FACTORY FINISHES

General

Standard: To AS 2700.

Extent: Apply protective coatings to internal and external metal surfaces of assembly cabinets including covers, except to stainless steel, galvanized, electroplated, or anodised surfaces and to ventilation mesh covers.

Finish coats: Thermoset powder coating to AS 4506 or two-pack liquid coating of AS/NZS 3750.13 primer and proprietary or epoxy acrylic full gloss spray finish to **Factory finishes schedule**.

Factory finishes schedule

Mounting structure (brackets)	To match enclosure
Enclosure	Indoor assemblies: Orange X15 Outdoor assemblies: Avocado green G34 Assembly interior: White
Escutcheons	Removable equipment panels: Off white Y35
Doors	To match enclosure
Plinths	Black

2.6 BUSBARS

General

General: Provide main circuit supply busbars within assemblies, extending from incoming supply terminals to the line side of protective equipment for outgoing functional units and for future functional units.

Standards: To AS 3768, AS 3865 and AS 4388.

Definitions

Incoming busbars: Busbars connecting incoming terminals to line side terminals of main switches.

Main circuit supply busbars: Busbars connecting incoming functional unit terminals, or incoming busbars where no main switches are included, to outgoing functional unit terminals or outgoing functional unit tee-offs.

Tee-off busbars: Busbars connecting main busbars to incoming terminals of outgoing functional units.

Custom-built busbar construction

Material: Hard-drawn high-conductivity electrolytic tough pitched copper alloy bars, designation 110.

Temperature rise limits - active and neutral conductors:

- Maximum rated current temperature rise limits: 65 ± 1.5ºC by type test or calculation to AS 3768 or AS 4388.

Maximum short-circuit withstand current temperature rise limits: 160ºC by calculation to AS 3865.

Cross section: Rectangular with radiused edges.

Supports: Sufficient to withstand thermal and magnetic stresses due to maximum prospective fault currents.

Support material: Non-hygroscopic insulation capable of holding busbars at 105ºC.

Proprietary busbars

Type: Multi-pole proprietary insulated busbar assemblies or busbar systems, verified for short circuit capacity and temperature rise-limits by type tests.

Phase sequence

General: For main busbars and connections to switching devices, set-out phase sequence for phases A, B and C, from left-to-right, top-to-bottom and front-to-back when viewed from the front of the assembly.

Colour coding

General: Provide 25 mm minimum width colour bands permanently applied to busbars at 500 mm maximum intervals with at least one colour band for each busbar section within each compartment.

Active busbars: Red, white and blue respectively for the A, B and C phase.

Neutral busbar: Black.

MEN link: Green-yellow and black.

Protective earth busbar: Green-yellow.

Restrictions: Do not provide adhesive type colour bands.

Current carrying capacity

Active conductors: Take into account thermal stresses due to short circuit current, assuming magnetic material enclosures located indoors in well-ventilated rooms and 90ºC final temperature.

Neutral conductors: Size to match incoming neutral conductor current carrying capacity.

Protective earth conductors: Size for at least 50% of the rated short circuit withstand current for 100% of the time duration.

Tee-off busbars current rating

For individual outgoing functional units: Equal to maximum frame size rating of the functional unit.

For multiple functional units: Equal to the diversity factors of AS 3439.1, based on frame size rating.

MEN links

MEN links > 10 mm^2 in cross-section: Bolted removable busbar links stamped MEN LINK, located in the incoming compartment, between neutral and earth busbars.

Fault current limiters

General: Rate busbars connected to fault current limiters to 100% of the indicated fault current limiter circuit breaker frame size or fuse base rating.

Busbar links

General: For current transformers, provide removable busbar links ≤ 450 mm long.

Cable connection flags

General: Provide and support busbar flags for equipment with main terminals too small for cable lugs. Provide flags sized to suit cable lug termination, with current rating of at least the maximum equipment frame size.

Phase isolation: Provide phase isolation between flags where the minimum clearance distances phase-to-phase and phase-to-earth are below the component terminal spacing.

Future extensions

General: Pre-drill the main circuit supply busbar for future extensions and extend busbar droppers into future functional unit locations.

Jointing

Type: High tensile steel bolts, washers and nuts, with lock nuts or spring washers. Do not use tapped holes and studs or the like for jointing current carrying sections.

Custom-built busbar insulation

Active and neutral busbars and joints: Select from the following:

- Polyethylene: At least 0.4 mm thick with dielectric strength of 2.5 kV r.m.s for 1 minute, applied by a fluidised bed process in which the material is phase coloured and directly cured onto the bars.
- Close fitting busbar insulation mouldings at least 1 mm thick.
- Heat shrink material: Only on rounded edge busbars.

Taped joints: Apply non-adhesive stop-off type tape, coloured to match adjacent insulation and half lapped to achieve a thickness at least that of the solid insulation.

Damaged insulation: Repair damaged insulation before energising.

2.7 NEUTRAL LINKS AND EARTH BARS

Terminals

General: Provide terminals for future circuits.

Links

Assembly capacity > 36 poles: Provide neutral links and earth bars at the top and bottom of the circuit breaker section.

Assembly capacity ≤ 36 poles: Provide links and bars at the point of entry of incoming supply cables.

Mounting: Mount neutral links on an insulated base.

Control circuits: Provide separate neutral links and earth bars.

Labels: Provide labels for neutral and earth terminals.

Cables > 10 mm^2: Provide bolts or studs.

Communications earth: Make provision for connection of communications systems earth at switchboard earth bar to AS/ACIF S009.

2.8 INTERNAL WIRING

Wiring

General: Cable type: 0.6/1 kV copper cables. Provide V-90HT insulation where directly connected to active and neutral busbars.

Cable interconnections

General: For the main circuit supply, provide cable interconnections as follows:

- ≥ 1.5 mm^2 internal cables, with minimum V75 insulation rating with stranded copper conductors rated to AS/NZS 3008.1.1. Provide cables with current ratings suitable for the internal assembly ambient air temperature and for temperature rise limits of equipment within the assembly.
- Run cables clear of busbars and metal edges.
- Provide cables capable of withstanding maximum thermal and magnetic stresses associated with relevant fault level and duration.
- Run cables neatly. Provide slotted trunking sized for future cables or tie at 150 mm maximum intervals with ties strong enough to withstand magnetic stresses created at the specified fault current. Do not provide adhesive supports.
- Ensure wiring for future equipment can be installed without removal of existing equipment.
- Identify power and control cables at both ends with neat fitting ring type ferrules agreeing with record circuit diagrams. Mark to AS/NZS 4383.
- Terminate control cables and motor control circuits in tunnel terminals or, if necessary, provide suitable palm type lugs and correct crimp tool.
- For equipment mounted on hinged doors run cables on the hinge side to avoid restricting the door opening. Bundle cables with spiral wrap PVC and secure to door.
- If recommended by device manufacturers, provide shielded wiring.

Adjacent circuit breakers: If suitable proprietary multi-pole busbar assemblies are available to link adjacent circuit breakers, do not provide cable interconnections.

Cables > 6 mm^2

Terminations:

- Tunnel terminals: Single cables.
- Other connection points or terminals: ≤ 2 cables.

Doors: Do not run cables to hinged doors or removable panels.

Supports:

- Spacing at enclosure: ≤ 200 mm from a termination.
- Spacing generally: ≤ 400 mm.
- Strength: Capable of withstanding forces exerted during fault conditions.

Single core cables rated ≥ 300 A: Do not provide ferrous type metal cable saddles.

Terminals marked: Terminate marked cables for connection to external controls in correspondingly marked terminals within the assembly.

Control and indication circuits

General: Provide conductors sized to suit the current carrying capacity of the particular circuit.

Minimum size: 1 mm^2 with 32/0.2 stranding.

Cable colours

General: Colour code wiring as follows:

- A phase: Red.
- B phase: White.
- C phase: Blue.
- Neutral: Black.
- Earthing: Green-yellow.

2.9 TERMINATIONS

Submains, light and power circuits

General: Connect direct to the control equipment terminals.

Shipping breaks: Provide terminal blocks for interconnecting wiring on each side of shipping breaks.

3 EXECUTION

3.1 ASSEMBLY INSTALLATION

Fixing

General: Before making inter-panel connections, fix assemblies and metering equipment enclosures into position, level and plumb.

3.2 ASSEMBLY ENTRIES

Cable entries

General: Neatly adapt one or more cable entry plates, if fitted, to accept incoming cable enclosure. Provide the minimum number of entry plates to leave spare capacity for future cable entries. Do not run cables into the top of weatherproof assemblies.

Single core cables rated > 300 A: Pass separately through non-ferrous gland plates. Do not use metal saddles.

Cable enclosures

General: Continue cable enclosures to or into assemblies and fit cable entry plates so that the IP rating of the assembly and the fire rating of the cable are maintained.

Cable supports

General: Support or tie mains and submains cables within 200 mm of terminations. Provide cable supports suitable for stresses resulting from short circuit conditions.

Bus trunking system entry

General: Provide entry plates with close tolerance cut-out to accommodate busbars, fitted with a flange bolted and sealed to assembly enclosure to maintain assembly IP rating. Earth busway enclosure to assembly protective earth conductor. Fit busway flanges at assembly manufacturer's premises and retain for transportation.

3.3 MARKING AND LABELLING

General

General: Label the switchboard assembly in conformance with AS/NZS 3439.1 including the following:

- Size and type of all incoming and outgoing mains and submains.
- Emergency operating procedures.

3.4 COMPLETION

Maintenance

Standard: To *AS 2467

General: Carry out the following:

- Rectify faults, make adjustments and replace consumable and faulty materials and equipment within 24 hours of notification.
- Monthly inspections and maintenance work to maintain the assembly, including battery systems.

0943 SWITCHBOARD COMPONENTS

1 GENERAL

1.1 AIMS

Responsibilities
General: Provide switchboard components as follows and as documented.

1.2 CROSS REFERENCES

General
General: Conform to the *General requirements* worksection.

Associated worksections
Associated worksections: Conform to the following:

- *Electrical general requirements.*
- *Switchboards – proprietary.*
- *Switchboards – custom-built.*

1.3 DESIGN

Statutory authority's equipment
General: Liaise with the supply authority with regard to the installation and coordinate with their protective and control equipment.

1.4 SUBMISSIONS

Technical data
General: Submit technical data for all components.

2 PRODUCTS

2.1 GENERAL

General
Selection: To comply with the requirements of AS/NZS 3000 clause 1.7 and Section 2.

Rated duty: Uninterrupted.

Rated making capacity (peak): ≥ 2.1 x fault level (RMS) at assembly incoming terminals.

Utilisation category: To AS 60947.1 clause 4.4.

- Circuits consisting of motors or other highly inductive loads: At least AC-23.
- Other circuits: At least AC-22.

Coordination: Select and adjust protective devices to discriminate under over-current, and earth faults.

Enclosure: IP4X minimum.

2.2 SWITCH-ISOLATOR AND COMBINATION FUSE-SWITCH UNITS

General
Standard: To AS 60947.1 and AS/NZS 3947.3.

Poles: 3.

Operation: Independent manual operation including positive ON/OFF indicator.

Shrouding: Effective over range of switch positions.

Rated breaking capacity: ≥ rated full load current.

Fuse-switch units
Operation: Provide an extendable operating handle.

Fuse links: To be isolated when switch contacts are open. Provide 3 phase sets of high rupturing capacity (HRC) fuse links.

2.3 AUTO-TRANSFER SWITCHES

General
Standard: To AS 60947.1 and AS 3947.6.1.

Type: 3 pole automatic type with supervisory circuits which initiate and restore the changeover transfer operation.

Load side connections: Segregate from incoming side.

Classification:

- Contactors: PC.
- Circuits: CB.

Utilization category: To AS/NZS 3947.6.1 clause 4.4.

Interlocks: Provide electrical and mechanical interlocks.

2.4 MOULDED CASE AND MINIATURE CIRCUIT BREAKERS

General
Moulded case breakers: To AS 60947.1, AS 2184 and AS 60947.2.

Miniature circuit breakers: To AS/NZS 60898.1 or AS 3111.

Operation: Independent manual operation including positive ON/OFF indicator.

Trip type:

- Moulded case breakers: Adjustable thermal, fixed magnetic.
- Miniature circuit breakers: Fixed thermal, fixed magnetic.

Current limiting:

- Moulded case breakers: Required.

Isolation facility: Required.

Mounting: Mount circuit breakers so that the ON/OFF and current rating indications are clearly visible with covers or escutcheons in position. Align operating toggles of each circuit breaker in the same plane.

Utilisation category: Moulded case breakers:

- Final subcircuits category: Category A.
- Mains and submains: Category B.

Trip settings: Set as documented, seal, and label.

Trip units: Connect interchangeable and integrally fused trip units so that trip units are not live when circuit breaker contacts are open.

2.5 RESIDUAL CURRENT OPERATED CIRCUIT BREAKERS (RCBO)

Standard: To AS/NZS 3190.

Integral non-overload protection type: To AS/NZS 61008.1.

Integral overload protection type: To AS/NZS 61009.1.

Modular type: To AS 60947.2.

Default tripping current: 30 mA.

2.6 AIR CIRCUIT BREAKERS

General

Standard: To AS 60947.1 and AS 60947.2.

Type: Open construction, withdrawable 3 pole, front connected.

Utilisation category: Category B.

Closing operation: Provide independent manual operation with trip free closing mechanisms and positive mechanically operated *ON and OFF* indication.

Opening operation: Provide independent manually operated release for opening.

Auxiliary switch contacts: Provide contacts with minimum rated operational current of 6 A at 240 V, 50 Hz. Provide at least one spare normally-open and one spare normally-closed contacts. Provide shunt trip release coil circuits with an early-make/late-break series connected auxiliary contact.

Protection system: Provide a fully adjustable solid state protection system integral to the circuit breaker and incorporating a solid state protection relay.

Locking: Provide for circuit breakers to be locked in the open position.

Electrical Interlock: Control circuitry of functional units with normally-opened and normally-closed auxiliary contacts.

Operating mechanism charging: Manual.

Mechanical Interlock: Provide with captive type coded key with squared face key with alphabetical or numerical coded operating face.

Door interlock: Except for compartment doors that serve only as covers, provide interlocks to prevent compartment doors being open if the circuit breakers are closed.

Abnormal operations: Provide circuit breakers which preclude the following operations:

- Slow closing or opening of contacts.
- Manual independent hand closure, if springs fail.
- Release of charged springs while contacts are closed.

Maintenance: Provide for slow closing of the circuit breaker mechanism during disconnected maintenance.

Withdrawable type

Mounting: Mount circuit breaker on a withdrawable carriage for racking in or withdrawing, and for positively fixing the unit into any of the 3 following positions:

- Connected.
- Test/isolated.
- Disconnected.

Auxiliary contacts: Provide contacts which are disconnected in the isolated position and connected in the test position.

Interlocking: Provide interlocking which prevents circuit breaker being racked in or withdrawn unless it is in a tripped condition and prevents the circuit breaker being closed unless located in either the connected or test/isolated position. Provide stored energy devices which are automatically discharged by any racking operation.

Shutters: Provide automatic shutters, which can be locked, covering busbar and incoming/outgoing circuit connections and labelled *BUSBARS* and *CIRCUIT* respectively.

Earthing: Provide earthing connection between withdrawable carriage and assembly earth busbar which makes before, and breaks after, other contacts on the circuit breaker carriage.

2.7 FUSES WITH ENCLOSED FUSE LINKS

Standards: To AS 60269.1, AS 60269.2.0 and AS 60269.2.1.

Fuse links: Enclosed, high rupturing capacity type mounted in a fuse carrier.

Breaking range and utilisation category:

- Distribution/general purpose: gG.
- Motors: gM.

Fuse-holders: Mount fuse-holders so that fuse carriers may be withdrawn directly towards the operator and away from live parts. Provide fixed insulation which shrouds live metal when the fuse carrier is withdrawn.

Barriers: Provide barriers on both sides of each fuse link, preventing inadvertent electrical contact between phases by the insertion of screwdriver.

Spare fuse links: Provide 3 spare fuse links for each rating of fuse link on each assembly. Mount spares on clips within the spares cabinet.

Spare fuse holder carriers: Provide 3 spare fuse holder carriers for each size of fuse holder carriers on each assembly. Mount spares on clips within the spares cabinet.

Busbar mounted fuse holders: Provide fuse carriers with retaining clips, minimum fuse holder 32 A.

2.8 CIRCUIT BREAKER INTEGRAL PROTECTIVE RELAYS

General: Provide integral protective relays which provide for tripping in the event of relay operation, and for manually resetting. Provide operation indicators with a set of change over voltage free alarm contacts, for connection to an alarm circuit.

Mounting: Integral type: Readily accessible for viewing and adjustment with doors and covers in position.

Mounting: External type: Flush.

2.9 CURRENT TRANSFORMERS (PROTECTION)

General

Standard: To AS 60044.1.

Type: Cast resin encapsulated window type with busbar clamping devices.

Rated short time current: At least the short time current equivalent to the assembly fault level.

Rated short-time: At least the maximum time setting of the related protective relay. Minimum 1 s.

Rated primary current: Equal to assigned current rating of the associated functional unit.

Rated secondary current: 5 A. Connect star point to earth.

Interposing transformers: Provide as recommended by the protective relay manufacturer.

Characteristics: Conform to the recommendations of the protective relay manufacturer.

Test links: Provide test terminals and current transformer secondary shorting links in accessible positions within instrument panels. Provide a set of DIN-type rail mounted test links, consisting of screw clamped slide links and earth links, for each current transformer group.

Installation: Install transformers to permit easy removal.

Removable links: Provide removable links of minimum lengths for transformers fitted on busbar systems.

Markings: Mount transformers in the assembly enclosure, so that polarity markings and nameplate details are readily viewed right side up without removing the transformers.

2.10 TRANSIENT PROTECTION

Standards

Assemblies connected to the MEN earthing system: To AS 4070 Category II.

Primary protection

General: Provide shunt connected metal oxide varistors at assembly incoming supply terminals, on the line side of incoming functional units.

Visual indicator: Provide visual indication of status of transient detection.

Alarm contacts: Provide one set of normally closed 'dry' contacts indicating occurrence of a surge transient.

Secondary protection

General: Provide metal oxide varistors or zener diode surge protection to assembly in-built equipment and to semi-conductor components which are not able to withstand transient overvoltages exceeding primary protection let-through residual levels.

2.11 CURRENT TRANSFORMERS (METERING)

Standard

Measurement current transformers: To AS 60044.1.

Test links

General: Provide test links for connection of calibration instruments and meters and for shorting of current transformer secondaries.

Energy meters, maximum demand meters, ammeters and protection relays: Provide with rail-mounted links consisting of screw-clamped slide links and an earth link.

Test studs

General: For energy and demand meters provide rail-mounted potential test studs or plug connections next to associated current transformer links. Provide at least one set of test studs for each compartment.

Accuracy classification

Energy measurements: Class 0.5.

Indicating instruments: Class 3.

Ratings

Rated short time current: At least the short time withstand current equivalent of the circuit in which the transformer is installed.

Rated primary current: At least equal to the current rating of the functional unit.

Secondary windings: Rated at 5 A, burden of 0.4 Ω (10 VA) with star point earthed.

Type

General: If practicable, cast resin encapsulated window-type with busbar clamping devices. Otherwise wound-primary type with mounting feet.

Installation

General: Install transformers to permit easy removal.

Removable links: Provide removable links of minimum length for transformers fitted on busbar systems.

2.12 INSTRUMENTS AND METERS

Standard

Socket mounting system: To AS 1284.4.

Accuracy

Indicating Instruments and accessories: ≤ Class 1.5.

Thermal maximum demand indicators: Class 3.

Electricity meters: Class 0.5.

Power factor meters, phase angle meters and synchroscopes: 2 electrical degrees maximum error.

Transducers: Class 0.5.

Mounting

General: Flush mount.

Labels

General: If associated exclusively with one phase, label meters *RED*, *WHITE*, or *BLUE* as applicable.

Protection devices

Meter potential protection devices: Group together behind associated meter cover or hinged door, preferably next to current transformer test links.

Accessories

General: Mount next to associated instruments, inside cabinets.

Transducers

General: If necessary for transducer operation, provide auxiliary supply. Connect outputs to dedicated rail-mounted isolating type terminals.

Ammeters

Type: Moving iron type oil dampened for motor starter circuits.

Overscale: For ammeters subject to motor starting currents, overscale to at least 5 x full load current.

Selector switches: 4-position type with positions designated *R/W/B/OFF*. Mount under or beside relevant ammeters.

Maximum demand indicators

General: Provide a meter in each phase with 15 minute response time. Provide for sealing the reset mechanism. Provide a combination 3-point indicator consisting of an instantaneous red ammeter pointer, a red maximum demand slave pointer with external reset facility, and a white maximum demand pointer.

Instantaneous type: Combined type with bi-metal maximum demand ammeter element and moving iron instantaneous ammeter element.

Thermal type: Combined type with bi-metal maximum demand ammeter element.

Voltmeters

Type: Moving iron, 90º.

Selector switches: 7-position voltage transfer type for measurement of phase-to-phase and phase-to-neutral voltages with off. Mount under or next to relevant voltmeters.

Wattmeters and varmeters

General: Suitable for balanced 3 phase, 4 wire loads. Connect to measurement transducers.

Hours-run meters

General: 6 figure (minimum), horizontal linear digits dial with last digit read-out in 0.1 hour increments.

Watthour meters

Standard: To AS 62053.21.

Type: Electronic.

3-phase metering: Polyphase meters suitable for balanced 3 phase, 4 wire loads.

1 or 2 phase metering: Single phase meters.

Current rating: To suit load and overload conditions. Provide direct connect meters suitable for current range of 15 to 100 A and meters with current transformers suitable to 5 A secondary.

Register: Provide a direct reading register of the large figure type. Mark on the scale the metering transformer ratios and the multiplying factor applied to the meter constant.

Covers: Seal main covers.

Frequency meters

Type: Either an analogue type, or vibrating reed type with 7 reeds.

Analogue type: Graduated in 0.1 Hz increments.

Scales:

- Analogue: Graduated 45/65 Hz.
- Vibrating reed: Horizontal reed bar graduated 47/53 Hz.

Synchroscopes

General: Continuously rated, rotating vane type movement, with spring loaded bearings and silicon fluid dampening, positive and negative arrows, black pointer and 12 o'clock marking.

Scales: 360°.

Phase angle meters

General: Provide for 3 phase, 4 wire balanced loads.

Scales: 0.5 leading to 0.5 lagging.

2.13 CONTACTORS

Standard: To AS 60947.4.1.

Type: Enclosed, block type, air break, electro-magnetic.

Poles: 3.

Rated operational current: The greater of:

- Full load current of the load controlled.
- ≥ 16 A.

Mechanical durability: 10 million cycles to AS 60947.4.1.

Electric durability: ≥ 1 million operations at AC-22 to AS 60947.4.1.

Mounting: Mount with sufficient clearance to allow full access for maintenance, removal and replacement of coils and contacts, without the need to disconnect wiring or remove other equipment.

Auxiliary contacts: Provide auxiliary contacts with at least one normally-open and one normally-closed separate contacts with rating of 6 A at 230 V a.c., utilisation category: AC-1.

Slave relay: If the number of auxiliary contacts exceeds the number which can be accommodated, provide separate slave relays.

2.14 CONTROL DEVICES AND SWITCHING ELEMENTS

Standards

General: To AS 60947.1 and AS 60947.5.1.

Switching elements:

- Electrical emergency stop device with mechanical latching function: To AS 60947.5.4.
- Electromechanical control circuit devices: To AS 60947.5.1.
- Proximity switches: To AS 60947.5.2.

Rotary switches

General: Cam operated type with switch positions arranged with displacement of 60º.

Off position: Locate at the 12 o'clock position. Test positions must spring return to off position.

Rated operational current: At least 6 A at 230 V a.c.

Escutcheon plates: Provide rectangular plates securely fixed to the assembly panel. Identify switch position and function.

Time switches

Operation: 365 day operation.

Mains failure operation: 100 hour minimum operating capacity.

Contact rating: ≥ 16 A at 230 V a.c.

Construction: Provide readily accessible means of adjustment. Provide operational settings which are clearly visible when switch cover is fitted.

Dial: Digital with hour and minute display.

Override switch (manual): Required.

Control relays

Standards: To AS 60947.5.1.

Operation: Suitable for continuous operation. Provide relays selected in conformance with the **Control relay selection table**.

Construction: Plug-in types. Receptacle bases with captive clips which can be operated without using tools.

Contact elements: Electrically separate, double break with silver alloy, non-welding contacts.

Configuration: For standard relays, provide assemblies with ≥ 2 sets of contacts and expandable to 8 sets of contacts in the same assembly. Provide at least one normally-open and one normally-closed contact.

On site conversion: Provide contact blocks readily convertible to either normally-open or normally-closed contacts.

Control relay selection table

Relay type	Minimum mechanical life (million operations)	Base	Minimum contact rating	Interchangeable	Minimum number of contact elements
1	5	Plug-in	$1.25I_L$	Yes	2
2	10	Plug-in	5 A at 240 V	Yes	2
3	10	Fixed mounting	5 A at 240 V	Yes	4

Time delay relays

Adjustable range: Adjustable over the full timing range with timing repeatability within ± 12.5% of nominal setting.

Electronic relays: Incorporate light emitting diodes indicating energisation states of relays.

Synchronous relays

General: Provide synchronous motor drive type relay fitted with anti-stalling device which protects gearing during normal operation.

Phase failure relays

General: Provide separate solid-state phase failure relays which release at the following:

- < 85% of normal voltage.
- Single phase failure.
- Reverse phase sequence after an appropriate time delay.

Sensing circuit: To reject induced voltage spikes and disturbances with frequencies other than 50 Hz.

Back-up protection: Provide high rupturing capacity fuses to each phase.

Push-buttons

Type: Oil-tight, minimum 22 mm diameter, or 22 x 22 mm.

Rated operational current: At least 4 A at 240 V a.c.

Emergency stop devices with mechanical latching: To AS/NZS 3947.5.5.

Marking: Identify functions of each push-button. For latched STOP or EMERGENCY STOP push-buttons, provide label with instructions for releasing latches.

2.15 SEMICONDUCTOR CONTROLLERS AND CONTACTORS

General

General: Provide semiconductor controllers and contactors rated for the characteristics of the controlled load.

Standard: To AS/NZS 3947.4.3.

2.16 PROGRAMMABLE LOGIC CONTROLLERS

General

General: Provide complete programmable logic controllers including central processing unit, input/output modules and mounting hardware, and which are as follows:

- Modular in construction and of the same manufacture, with interchangeable peripherals and software.
- Have an integral power supply of sufficient capacity to satisfy the requirements of the central processing unit and input/output module combinations which can be located within the mounting hardware.
- Designed and constructed to operate in electrically noisy environments.
- Located in the low voltage control section of the associated functional unit.

Central processing units

General: Provide the following:

- Separate run, monitor and program functions.
- Operating system: Stored in non-volatile memory.
- Programmed software: Stored so that loss of power to the unit for a period up to 1 year will not cause corruption of data and will allow automatic restarting and correct operation immediately on power restoration.

Inputs and outputs (minimum):

- External inputs: 24.
- External outputs: 16.
- Internal relays: 128.

Input/output modules

Status: Clearly identified and indicated by a light emitting diode.

Diodes: Not obscured by assembly wiring.

Analog input: 4 to 20 mA or 0 to 10 V d.c., opto-isolated.

Analog output: 4 to 20 mA or 0 to 10 V d.c., into a burden of ≥ 600 Ω.

Digital input: 24 V d.c., opto-isolated.

Digital output: Volt-free relay contacts or opto-isolated solid state switches for switching an output load of at least 2 A at 24 V a.c. or d.c.

Programmer

Operation: Using ladder logic, allowing for editing without the need to re-enter the whole program. Include test and monitoring functions which facilitate testing, running and debugging of software and provide for input/output number check.

Hand-held programmers: Provide moulded connectors and 2 m connection cable.

2.17 CONTROL AND PROTECTIVE SWITCHING DEVICES OR EQUIPMENT

2.18 CONTROLLER DEVICE INTERFACES

General

General: Provide interfaces between equipment and control systems including the following:

- Programmable logic controllers.
- Metering systems.
- Building management systems.

Standard: To AS 62026.1, AS/NZS 62026.2, AS/NZS 62026.3 and AS/NZS 62026.5.

Actuator sensor interface: To AS/NZS 62026.2. Provide control system components with an actuator sensor interface. The actuator sensor interface may be integrated into field devices, or be used in separate modules.

Devicenet: Provide control system components with a devicenet connection based controller-device interface, suitable for use on a Controller Area Network to AS/NZS 62026.3.

Smart distributed system (SDS): Provide control system components with a SDS controller-device interface, suitable for use on a Controller Area Network to AS/NZS 62026.5.

Seriplex: Provide a Seriplex interface and communications system between single or multiple controllers and control circuit devices or switching elements.

2.19 INDICATOR LIGHTS

Standard

General: To AS 60947.5.1.

Incandescent indicators

Type: Incandescent oil tight type minimum 22 mm diameter or 22 x 22 mm.

Lamps: Changeable from front of panel without removing the holder.

Lamp rating: 1.2 to 5 W.

Neon indicators

General: 240 V, 12 mm diameter with in-built resistor.

LED indicators

General: 12 or 24 V as necessary, in corrosion-resistant bezel, nominal 5 mm diameter.

Press-to-test

Compartments/subsections with < 5 indicating lights: Provide each indicating light with a fitted integral press-to-test lamp actuator.

Compartments/subsections with ≥ 5 indicating lights: Provide a common press-to-test lamp push-button.

2.20 INDICATING COUNTERS

General

General: Provide the following:

- At least 6 digits.
- Digits at least 3.5 mm high.
- Continuous duty rated.
- Non-reset type.
- 500 V surge diverters.

2.21 ALARM ANNUNCIATORS

General

General: Provide the following:

- Labelled annunciator illuminated windows, to indicate status and alarm conditions.
- Lamp test acknowledge-mute and reset individual push-buttons.
- Audible alarm and associated logic circuitry.

Mode of operation

General: Provide the following functions:

- Fault conditions: To initiate flashing of appropriate annunciator lamps and sounding of audible alarms.
- Operation of acknowledge and mute buttons: To silence audible alarms and change annunciator lamps to the steady state on condition.
- Window: To extinguish only when fault condition has been cleared and alarm reset push-button has been activated.
- Subsequent alarms on other inputs: To reactivate the audible alarm and flash the appropriate annunciator lamp.
- Resetting: After correction of the fault condition, provide on-site choice of either automatic resetting or manual resetting at the annunciator panel.

Type

General: Extra-low voltage, solid state, flush mounted, window type.

Lamps

General: Provide annunciators with 2 extra-low voltage lamps per window.

Rated voltage of lamps105% of the annunciator system voltage.

Replacing: Changeable from front of panel without affecting condition of annunciator.

Vibration: Provide lamps which do not disconnect due to vibration.

Extra-low voltage power supply

General: Provide an extra-low voltage power supply for the alarm annunciator.

Windows

Nominal size: 15 x 35 mm.

Engraving: Filled in black.

- Background colours: White for status monitoring, red for alarms and shutdown functions.

2.22 AUDIBLE ALARM DEVICES

Sound level

General: The greater of the following:

- 65 dB(A) at 1 m.
- 15 dB(A) above ambient sound levels at any location in designated areas.

2.23 EXTRA-LOW VOLTAGE TRANSFORMERS

General

General: Provide the following:

- Centre tap on secondary winding.

- Primary and secondary windings wired out on opposite sides of transformer case.
- Primary and secondary windings separated by means of an earthed screen wired out to an insulated terminal.
- Transformer rating ≥ 125% of maximum output load, taking account of degree of ventilation and ambient temperature within assembly, and supplied load.

2.24 BATTERIES AND CHARGERS

Standards

Valve regulated sealed lead-acid batteries: To AS/NZS 4029.2.

Vented nickel-cadmium batteries: To AS 3731.1.

Chargers: To AS 4044 Type 2.

General

General: Provide a battery and charger system for circuit breaker tripping, closing and automatic changeover switch operation. Locate within the switchroom or switchboard assembly.

Circuit breaker operation

General: Provide a d.c. supply for circuit breaker operation from battery system and charger.

Performance

General: Capable of 10 consecutive air-circuit breaker or moulded case circuit breaker operations for the designated quantity of circuit breakers. Each operation consists of open-close of main contacts for 0.5 s duration, with 1 s intervals between operations, and minimum discharge current of 4 A, with batteries in 50% discharge condition. Maintain a minimum terminal voltage of 80% of rated voltage at the completion of the 10 operations.

System voltage: 110 V d.c.

Battery chargers

Type: Free standing, floor mounted, ventilated cabinet type with separate charger and battery subsections.

Degree of protection: IP42.

Tapping: Provide tappings on the transformer to permit adjustment over a range of 95% – 105% of secondary winding voltage on open circuit.

Circuitry: Solid state, micro-processor type, constant voltage, fully automatic, incorporating a smoothing network to give an output wave form at least as smooth as that of a 3-phase bridge system, and automatic boost and float charge functions to ensure maximum battery life and rated performance. Provide facilities for manual boost and test.

Maximum design transient: 70% of the component manufacturer's peak inverse ratings.

Instruments, controls and indicators: Group for ease of operation. Provide analogue or digital instruments for the following:

- Charger output current.
- System voltage.
- Load current.

a.c. input protection: Miniature circuit breakers. Protect outgoing tripping supply with a 2 pole d.c. miniature circuit breaker.

Alarm indication: Provide alarm indication to monitor the following:

- a.c. supply.
- Boost charge on.
- Charge fail.
- Low battery voltage.
- High battery voltage.
- Low electrolyte for vented cells.
- Earth fault, secondary side.

Safety signs and labels

Standard: To AS 2676.1.

Safety signs: Provide cautionary, regulatory and emergency safety signs to charger enclosure and switchroom.

2.25 ANTI-CONDENSATION HEATERS

General

Rating: Provide heaters rated at not less than 20 W/m^2 of total external area including top of weatherproof enclosure.

Type: Black heat type which may be touched without injury, mechanically protected and thermostatically controlled.

2.26 SPARES CABINET

General

General: Provide a spares cabinet with main name plate, labelled shelves and non-lockable door. Size for storing racking handles, special tools, spare lamps, spare fuse links and other equipment necessary for satisfactory assembly operation.

Location: Either of the following:

- Incorporated into assembly enclosure.
- Wall mounted in main switchroom.

Finish: To match switchboard assembly.

3 EXECUTION

3.1 MARKING AND LABELLING

General

General: Provide labels including control and circuit equipment ratings, functional units, notices for operational and maintenance personnel, incoming and outgoing circuit rating, sizes and origin of supply and kW ratings of motor starters.

Lettering heights: Include the following requirements:

- Isolating switches: ≥ 5 mm.
- Switchboards, main assembly designation: ≥ 25 mm.
- Switchboards, outgoing functional units: ≥ 8 mm.
- Switchboards, sub assembly designations: ≥ 15 mm.

Labels on assembly exteriors

Manufacturer's name: Required.

Assemblies: Label with essential markings.

Designation labels: For other than main assemblies, provide designation label stating source of electrical supply. Identify separate sections of enclosures.

Assembly controls: Label controls and fault current limiters, including the following:

- Circuit designation for main switches, main controls and submains controls.
- Details of consumers mains and submains.
- Incoming busbar or cable rating to first tee-off.
- Fuse link size.

Labels on assembly interiors

General: Provide labels for equipment within assemblies. Locate so that it is clear which equipment is referred to, and so that lettering is not obscured by equipment or wiring.

Moulded case circuit breakers: If circuit breaker manufacturer's markings are obscured by operating handle mechanisms or motor operators, provide additional markings open to view on, or next to, the circuit breaker.

Arrestors: Label each group of primary arrestors, stating their purpose and the necessary characteristics.

Danger, warning and caution notices

Busbars: If polymer membrane coating is used without further insulation, provide warning notices on the front cover near the main switch or local main switch and on rear covers, indicating that busbars are not insulated.

Fault current limiters: In assembly sections containing fault current limiter fuses provide caution notices fixed next to the fault current limiters, stating that replacement fuse links are to match the installed fuse link ratings, make and characteristics. Provide separate label stating make and fault current limiting fuse ratings.

Externally controlled equipment: To prevent accidental contact with live parts, provide warning notices for equipment on assemblies not isolated by main switch or local main switch.

Stand-by power: Provide warning notices stating that assemblies may be energised from the stand-by supply at any time.

Anti-condensation heaters: To prevent accidental switching off, provide caution notices for anti-condensation heaters.

Insulation and shrouding: For insulation or shrouding requiring removal during normal assembly maintenance, provide danger notices with appropriate wording for replacement of insulation shrouding before re-energising assemblies.

Positioning: Locate notices so that they can be readily seen, next to or, if impracticable, on busbar chamber covers of functional units and behind the front cover of functional units. Provide circuit identification labels in the cabling chamber of each functional unit, located next to external terminations.

Schedule cards

General: For general light and power distribution assemblies, provide schedule cards of minimum size 200 x 150 mm, with typewritten text showing the following as-installed information:

- Submain designation, rating and short-circuit protective device.
- Light and power circuit numbers and current ratings, cable sizes and type and areas supplied.
- Mounting: Mount schedule cards in a holder fixed to the inside of the assembly or cupboard door, next to the distribution circuit switches. Protect with hard plastic transparent covers.

Single-line diagrams

Main and submain assemblies: Provide single-line diagrams.

Format: Non-fading print, at least A3 size, showing the situation as installed.

Mounting: Enclose in a non-reflective PVC frame and wall mount close to assembly.

Marking cables

General: Identify the origin of all wiring by means of legible indelible marking.

Identification labels: Provide durable labels fitted to each core and sheath, permanently marked with numbers, letters or both to suit the connection diagrams.

Multicore cables and trefoil groups: Identify multicore cables and trefoil groups at each end with durable non-ferrous tags clipped around each cable or trefoil group.

0947 POWER FACTOR CORRECTION

1 GENERAL

1.1 AIMS

Responsibilities
General: Provide power factor correction as follows and as documented.

General
Type: Microprocessor controlled.

Function: To maintain the system power factor in the documented range and to provide harmonic filtering under all load conditions.

Components: To be sized and selected to:

- Limit the increase in incoming supply voltage total harmonic distortion to < 2.5%.
- Limit the total harmonic distortion to < 4%.
- Prevent interference with Supply Authority frequency injection systems

Harmonics: Reduce parallel supply impedance resonance using a series connected reactors tuned to limit the total harmonic current within the capacitors to < 5% of their nominal rating.

Service life of all components: > 10 years.

Standards
Electronic compatibility (EMC) requirements: To AS/NZS 61000.

1.2 CROSS REFERENCES

General
General: Conform to the *General requirements* worksection.

Associated worksections
Associated worksections: Conform to the following:

- *Electrical general requirements.*
- *Low voltage power systems.*
- *Switchboards – custom-built.*
- *Switchboard components.*

1.3 INTERPRETATIONS

Abbreviations
General: For the purposes of this worksection the abbreviations given below apply.

- PFC: Power factor correction equipment.

1.4 INSPECTIONS

Notice
Inspection: Give sufficient notice so inspection may be made of the following:

- Equipment is ready for inspection prior to despatch from factory.

1.5 SUBMISSIONS

Technical data
General: Submit the following:

- EMC technical data to AS/NZS 61000.
- Design calculations for the sizing of all capacitors and reactors.

Shop drawings
Shop drawings: Provide the following:

- The system general arrangement and layout with details of connections, circuit breakers, cable sizes, overall dimensions, weight, location of access doors, cable terminating locations and necessary clearances.
- Control schematics. Provide a description of operation with all control schematics.
- Functional block diagram.
- Heat generated by the PFC.
- Type and rating of all equipment items.

1.6 PRE-COMPLETION TESTS

Capacitors
General: Carry out capacitance and d.c. dielectric tests. Submit the capacitor unit test report before factory inspection.

2 PRODUCTS

2.1 CAPACITORS

General
Standard: To IEC 60831-1 and IEC 60831-2.

Type: Vacuum oil impregnated metallised polypropylene (MPP).

Automatic overpressure disconnection: Required.

Capacitance tolerance: Within -5% to +10%.

Construction: Cylindrical with single capacitor unit per can.

Dielectric rating: ≥ 500 V RMS at 50 Hz selected to accommodate the series reactor voltage.

Discharge resistance: Required.

Loss: < 0.5W/kVAR (low loss type).

Removal: Arranged to permit removal of faulty module while the remaining capacitors continue to function normally.

Surface temperature: Rated to achieve < 60°C.

Terminals: Tunnel or post type.

2.2 CONTACTORS

General
Type: Step-switching.

Utilisation category: for capacitor switching AC-6b.

Rating: For capacitor switching duty at ≥ 1.5 times the capacitor step full load current.

2.3 CONTROLLER

General
General: Provide a site-programmable, microprocessor, step controller, incorporating non-volatile programme and data memory. Include the following:

- Automatic cycling of use of capacitor steps: Required.

- Automatic isolation in the event of capacitor over temperature or over current: Required.
- Data interface for remote monitoring and data download: RS232.
- Local alarms for:
  . Over temperature.
  . Over voltage.
  . Reactive power exceeding adjustable programmed levels.
- Local digital display and remote monitoring of:
  . Power factor.
  . Incoming supply load (amps, kW and kVAR).
  . Number of steps in use.
  . Percent harmonic current.
  . Harmonic currents.
  . Stored data for ≥ 1 week in date/time format.
- Manual-off-auto selection: Required.
- Remote alarm output contact for remote group alarm facility: Required.
- Supply from an alternative source: Provide terminals and logic to disable all capacitor steps.
- Time delay after restoration of power supply: ≥ 60 s before switching in the first stage.
- Time delay between stages: Switching adjustable to be from 1 to 300 s.

Software: Provide 3 copies of proprietary software for remote monitoring and alarms.

2.4 CURRENT TRANSFORMER INTERFACE

General

General: Provide interface to a 5 A secondary, 10 V.A, class 1, PFC current sensing transformer installed in the relevant switchboard.

2.5 INDUCTORS

General

Carrying capacity: ≥ 1.5 times the rated capacitor current at 50 Hz without saturating at 40°C ambient.

Cores: Insulated, laminated, high permeability silicon iron.

Flux density at rated current: < 0.85 tesla.

Inductance tolerance: Within ± 5% at rated current.

Losses: Very low loss design.

Mounting hardware: Non-ferrous.

Q factor: > 10.

Separate inductors for each capacitor step: Required.

Windings: High purity copper with Class F temperature rated insulation.

3 EXECUTION

3.1 INSTALLATION

General

General: Connect the PFC to the power system as documented.

Power system

Protection: Provide protective devices to grade and discriminate with upstream devices. Individually protect each kVAR step.

Capacitors

Insulation: Insulate all live parts.

Layout: Arrange capacitors for easy removal and replacement.

Mount capacitors in separate cubicle compartment, segregated from inductors, fuses and switchgear.

Ventilation: Separate capacitors by > 25 mm of air space.

Inductors

General: Mount inductors in separate cubicle compartment, segregated from capacitors, fuses and switchgear.

Cubicle

Construction: To S*witchboards – custom-built*.

Colour: Match main switchboard.

Cooling fans: Muffin type axial fans.

Temperature rise: Ventilate the PFC cabinet so internal temperature rise is < 5°C above ambient in each cabinet compartment.

3.2 COMPLETION

Warranties

Warranty: Provide 24-month warranty with six monthly service.

0951 LIGHTING

1 GENERAL

1.1 AIMS

Responsibilities
General: Provide lighting as documented.

1.2 PROJECT REQUIREMENTS

Proprietary equipment
General: The requirements of this specification for lamps, ballasts and luminaire control equipment over-ride the specifications inherent in the selection of a particular make and model of luminaire.

Minimum energy performance standards (MEPS)
General: To AS/NZS 4783.2 and AS/NZS 4782.2.

1.3 CROSS REFERENCES

General
General: Conform to the *General requirements* worksection.

Associated worksections
Associated worksections: Conform to the following:

- *Electrical general requirements*.
- *Low voltage power systems*.

1.4 STANDARDS

Standards
Air-handling luminaires: To AS/NZS 60598.2.19.

EMC compliance: To AS/NZS CISPR 15.

Energy efficiency for ballasts and lamps: To AS/NZS 4783.2.

Fixed general purpose luminaires: To AS/NZS 60598.2.1.

Floodlights: To AS/NZS 60598.2.5.

Harmonic limits: AS/NZS 61000.3.2.

Luminaires, general requirements and tests: To AS/NZS 60598.1.

Luminaires: To AS/NZS 60598.1.

Luminaires for swimming pools: To AS/NZS 60598.2.18.

Luminaires for use in clinical areas of hospitals and health care buildings: To AS/NZS 60598.2.25.

Luminaires with built-in transformers for filament lamps: To AS/NZS 60598.2.6.

Portable general purpose luminaires: To AS/NZS 60598.2.4.

Recessed luminaires: To AS/NZS 60598.2.2.

Road lighting luminaires: To AS/NZS 1158.6.

Radio interference limits: To AS/NZS CISPR 15.

1.5 INTERPRETATIONS

Abbreviations
General: For the purposes of this worksection the abbreviations given below apply.

- CCT: Correlated colour temperature.
- CRI: Colour rendering index.
- DALI: Digital addressable lighting interface.
- EEI: Energy efficiency index.
- ELV: Extra low voltage.
- ILCOS: International lamp coding system.
- PLC: Programmable logic controllers.
- SBC: Small bayonet cap.
- SES: Small Edison screw.

Definitions
General: For the purposes of this worksection the definitions given below apply.

- Control system: A lighting control system comprising a combination of some or all of the following:
  . Automatic sensing and control components.
  . Timers.
  . Manual overrides.
  . Programming using a computer interface.
- Proprietary luminaires: Luminaires available as a catalogue item.
- Custom-built luminaires: Luminaires manufactured to order.

1.6 SUBMISSIONS

Technical data
General: Submit technical data of the following:

- Luminaires
- Lamps
- Ballasts
- Power factor correction equipment
- Lighting control systems.
- All accessories.

Shop drawings
General: Submit shop drawings of lighting column mounting bases.

Samples
General: Submit samples of all luminaires and accessories.

2 PRODUCTS

2.1 PROPRIETARY LUMINAIRES

General
General: Provide proprietary luminaires complete with lamps, luminaire control equipment, lighting control equipment, and accessories as documented.

2.2 LAMPS

Standards
Fluorescent: To AS 4782.1 and AS 4782.2.

High pressure mercury vapour: To IEC 60188.

High pressure sodium vapour: To IEC 60662.

Incandescent: To AS 2325.

Low pressure sodium vapour: To IEC 60192.

Self ballasted lamps: To AS/NZS 60968 and AS/NZS 60969.

Single capped fluorescent lamps: To AS/NZS 60901.

Tungsten halogen: To IEC 60357.

Fluorescent lamps

Colour corrected temperature: 4000 K.

Colour rendering: Group 1B to AS/NZS 1680.1.

Incandescent lamps

Type: Tungsten filament for general lighting service, rated 250 V.

Bulb finish: Internally frosted.

Lamp cap type table

Lamp rating	Cap type
≤ 100 W	Bayonet (B22), medium Edison screw (E27), small Edison screw (E14), or small bayonet (SBC)
> 100, ≤ 200 W	Medium Edison screw (E27) or bayonet (B22)
> 200 W	Goliath Edison screw (E40/45)

Tungsten halogen lamps

Tungsten halogen lamps not enclosed behind glass: low pressure, low UV emission type.

Low voltage dichroic lamps: Provide dichroic lamps with integral reflectors.

2.3 BALLASTS

General

General: Provide ballasts for lighting systems selected to be compatible with the lamp and control method.

Standard: To AS/NZS 61558.1.

Electronic fluorescent lamp ballasts

Standards: To AS/NZS 61347.2.3 and AS/NZS 60929.

Current total harmonic distortion: < 15%.

Number of ballasts: Provide separate ballasts for each lamp.

Reactive fluorescent lamp ballasts

Standard: To AS/NZS 60921 and AS/NZS 61347.2.8.

Connections: Provide quick-connect terminals or wiring, suitable for the operating temperature close to the ballast.

Number of ballasts: Provide separate ballasts for each lamp.

Ballast performance measurement – fluorescent lamps

Standard: To AS/NZS 4783.1.

Discharge lamp ballasts

High-pressure mercury vapour, low-pressure sodium vapour, high-pressure sodium vapour and metal halid type: To AS/NZS 61347 and AS/NZS 60923.

Metal halide type:

- ≤ 150 W: Reactors or electronic controlgear.
- > 150 W indoor: To the lamp manufacturer's recommendation.
- > 150 W outdoor: To the lamp manufacturer's recommendation.

Igniters: Provide igniters which cut out when lamp ignites and after pre-determined time period if lamp fails to ignite.

2.4 POWER FACTOR CORRECTION

General

General: Provide power factor correction on all luminaires to a minimum power factor of 0.9 lagging.

Capacitors

Standard: To AS 61048 and AS 61049.

Integral fuses

General: Provide integral fuses for high intensity discharge (HID) lamp ballasts.

2.5 GEAR TRAY COVER

General

Fixing: Screw fixed.

2.6 WIRING

Flexible cords

General: Provide recessed luminaires with an external ≥ 1.5 m length of 0.75 mm^2 3-core V75 (minimum) PVC/PVC flexible cord, connected to a 10 A 3-pin moulded plug to AS/NZS 3112.

Other fittings flexible cord cross sectional area: ≥ 1 mm^2.

2.7 LIGHTING CONTROL

Manual controls

General: Provide manual control of luminaires into groups, zones and to individual devices as documented.

Digital control system

General: Provide a proprietary, microprocessor-based system to control lighting under automatic and user interface control as documented.

Control wiring: Daisy chained, Cat5 minimum, UTP cable, with distinctive sheath colour.

Controllers and contactors: Provide controllers and contactors rated for the characteristics of the controlled load and to AS/NZS 3947.4.3.

Dimmer control: Provide electronic dimmer controls compatible with the lighting control system and as documented.

Direct current interface for proximity sensors and amplifiers: To AS/NZS 3947.5.6.

Controller interfaces: Provide interfaces between lighting control systems and other **Selected** control systems.

2.8 ACCESSORIES

Lighting outlets

Pin arrangement: Standard: 3 flat pin with looping terminal.

Lighting switches

General: Provide light switches as documented.

Standard: To AS/NZS 3133.

Minimum: 10 A, 230 V a.c.

Key switches
General: Proved key switches as documented.

Run-on timer switches
General: Proved run-on timer switches as documented.

Delay: Adjustable to 20 minutes.

Dimmer switches
General: Provide integral dimmer/switch units as documented.

Proximity switches
General: Provide proximity switches as documented.

Standard: To AS/NZS 60947.5.2.

Daylight switches
General: Provide integral photo electric switch units as documented.

Performance: Adjustable between 50 and 1000 lux.

Time delay: > 2 minutes.

Illumination differential: > 50 lux.

Motion detector switches
General: Provide movement detectors which cover designated areas as documented.

Timer: Incorporate 'on' timber adjustable between 1 and 5 minutes minimum and 30 minutes and 2 hours maximum.

Standard: To AS 2201.3.

Type: Passive infra-red.

Manual time delay switches
General: Proved manual time delay relay switches as documented.

Type: Pneumatic.

Duration: Adjustable between 5 minutes and 15 minutes.

Indicator light: Required. Activated when artificial illumination is 'off'.

3 EXECUTION

3.1 RE-USE OF LUMINAIRES

Modifications and refurbishing
General: Modify and refurbish existing luminaires to manufacturer's current standards. Test for compliance with current Australian Standards before returning to service. Provide test results.

Component replacement: Starter and lamp.

Diffuser: Clean.

3.2 SUPPORTS

General
General: Install luminaires on proprietary supports by means of battens, trims, noggings, roses and packing material.

Suspended luminaires
Rods: Steel pipe suspension rods fitted with gimbal joints.

Chains: Electroplated welded link chain.

Levelling wire: Stainless steel.

Levelling: Adjust the suspension system length so that the lighting system is level and even.

Horizontal tolerance: ± 3 mm between luminaires within the one space.

Surface mounted luminaires
General: Fit packing pieces to level luminaires and prevent distortion of luminaire bodies. Provide packing strips to align end to end luminaires.

Fixing: Provide 2 fixings at each end of fluorescent luminaires. A single fixing at each end in conjunction with 1.6 mm backing plates may be used for narrow luminaires.

Recessed luminaries
General: Install recessed luminaries in trimmed openings in the suspended ceiling.

3.3 WIRING CONNECTION

Recessed luminaires
General: Connect recessed luminaires to a plug socket outlet.

Lighting tracks
General: Locate associated low voltage transformers within 600 mm of the track.

3.4 COMPLETION

General
General: Verify the operation of all luminaires.

Adjustment: Adjust aiming and controls for all luminaires under night time conditions.

Re-lamping: Replace lamps which have been in service for a period greater than 50% of the lamp life as published by the lamp manufacturer.

0952 LUMINAIRES – CUSTOM-BUILT

1 GENERAL

1.1 AIMS

Responsibilities
General: Provide custom-built luminaires as follows and as documented.

1.2 LUMINAIRE PERFORMANCE

Lamp performance
General: Provide reflectors, accessories and control equipment to the lamp manufacturer's recommendations and which allow the lamps to achieve the performance given in the lamp manufacturer's published data sheets.

Photometric performance
Provide luminaires which achieve the photometric and brightness characteristics as documented.

1.3 CROSS REFERENCES

General
General: Conform to the *General requirements* worksection.

Associated worksections
Conform to associated worksections as follows:

- *Electrical general requirements*.
- *Low voltage power systems.*
- *Lighting*.

1.4 INSPECTION

Notice
Inspection: Give notice when the first batch of each type is ready for delivery to site.

1.5 SUBMISSIONS

Shop drawings
General: Submit shop drawings of custom-built luminaires showing dimensions of equipment, details and location of accessories, details of materials and labelling details.

Technical data
General: Submit photometric data for each type of custom-built luminaire in hard copy and in IES standard electronic format.

Standard: To AS 1680.3.

Samples
Prototypes: Submit prototypes of each type of custom-built luminaire.

2 PRODUCTS

2.1 CONSTRUCTION

Stiffness
General: Provide materials, body shape and methods of manufacture so that luminaires neither warp nor sag when installed.

Ceiling trim
Provision for recessed mounting in suspended ceilings: To AS 2946.

Moulded plastic bodies
Exterior use: UV stabilised.

2.2 WIRING

Terminal blocks
General: Provide terminals with 2 screws each and capable of accommodating ≥ three 2.5 mm^2 conductors.

Flexible cords
General: Provide recessed luminaires with an external 1.5 m (minimum) length of 0.75 mm^2 3-core V75 (minimum) PVC/PVC flexible cord, connected to a 10 A 3-pin moulded plug to AS/NZS 3112.

Other fittings flexible cord cross sectional area: To AS/NZS 60598.

Minimum cable size
Screwed connectors: 24/0.2 mm.

Quick connectors: 1/0.75 mm.

Fluorescent luminaires
Cable: V-90HT copper cable conductor.

Loom wiring: Neatly loom the wiring and install it clear of ballasts. Fix looms to the luminaire body with clips made from soft metal or polyethylene.

Incandescent and discharge lamp luminaires
Cable: Wire between components and lampholder with V-90HT PVC, fibreglass, silicone, or teflon-insulated copper cable conductor, to suit the operating temperature within the luminaire.

Termination: Mount a fixed terminal block inside each luminaire.

2.3 ACCESSORIES

Location
General: Provide accessories selected for, and located to:

- Permit easy replacement.
- Limit magnetic interference with lamps.
- Minimise heat build up and its effect on other components.

Spacing
General: If 2 or more accessories are installed in a single luminaire, space them to allow removal and replacement of individual items without the need to remove others.

Fixing
General: Select from the following:

- Blind rivets.
- Nuts and similar devices: Captive type.

Bayonet cap and Edison screw accessories
General: Fix lampholder sockets to prevent rotation.

Fluorescent lampholders
General: Mount each lampholder rigidly. Space lampholders laterally to allow for the installation and replacement of the lamps.

Dimensions and tolerances: To AS/NZS 4782.1.

2.4 LIGHT CONTROL

General
Provide light control elements comprising reflectors, diffusers etc. to achieve the performance as documented.

Hinged diffusers
General: Provide hinged diffusers securely connected to the luminaire body, with the diffuser held captive.

2.5 OTHER CONTROLGEAR

Standards
General: To AS/NZS 61347 Parts 1, 2.1, 2.2, 2.3, 2.4, 2.5, 2.6, 2.8, 2.9, 2.10 and 2.11.

Fluorescent lamp starters
Standard: To AS 4111 or AS/NZS 60155.

Starter switches: Provide starter switches which are compatible with the lamp and controlgear.

ELV transformers
General: For extra-low voltage tungsten halogen lamps provide the following:

- One transformer per lamp with power rating matching the lamp.
- Common transformers which maintain constant secondary voltage irrespective of load and maintain primary/supply mains fluctuation within normal limits.

Transformer regulation: 5%.

Regulation
Output voltage: Not in excess of the nominal rated lamp voltage at a load of 75% of nominal transformer rating.

3 EXECUTION

3.1 COMPLETION

General
General: Verify the operation of all luminaires.

0961 TELECOMMUNICATIONS CABLING

1 GENERAL

1.1 AIMS

Responsibilities
General: Provide a passive telecommunications cabling network system as follows and as documented.

1.2 SYSTEM DESCRIPTION

Network connection
General: Provide network connection as documented.

Campus distributor
General: Provide campus distributor as documented.

Campus cabling
General: Provide campus cabling as documented.

Building distributor
General: Provide building distributor as documented.

Backbone cabling
General: Provide backbone cabling as documented.

Floor distributors
General: Provide floor distributors as documented.

Consolidation points
General: Provide consolidation points as documented.

Telecommunications outlets
General: Provide telecommunications outlets as documented.

Patching
General: Provide patching of telecommunications outlets and equipment as documented.

System performance
Application class to AS/NZS 3080 clause 6.3: E.

Balanced system to AS/NZS 3080 clause 7 (data): Category 6.

Balanced system to AS/NZS 3080 clause 7 (voice): Category 6.

Fibre system class: To AS/NZS 3080 clause 8.

Warranty (years): 15 years minimum.

1.3 CROSS REFERENCES

General
General: Conform to the *General requirements* worksection.

Associated worksections
Associated worksections: Conform to the following:

- *Electrical general requirements.*
- *Cable support and duct systems.*

1.4 STANDARDS

General

Authorities: To the requirements of the Australian Communications and Media Authority (ACMA).

Cabling products: To AS/ACIF S008 and AS/NZS 3080.

Installation of cabling: To AS/ACIF S009, AS/NZS 3080, AS/NZS 3084, SAA HB 29 and SAA HB 243.

Installation of small office/home office cabling: To AS/ACIF S009, AS/NZS ISO/IEC 15018 and SAA HB 29.

Cable management and documentation: To AS/NZS 3085.1.

EMC: To the recommendations of AS/NZS 3080.

1.5 INTERPRETATION

Abbreviations

General: For the purposes of this worksection the abbreviations given below apply.

- EMC: Electromagnetic compatibility.
- EMI: Electromagnetic interference.
- EMR: Electromagnetic radiation.
- RU: Rack unit.
- CES: Communication earth systems.
- TRC: Telecommunications reference conductor.

1.6 SUBMISSIONS

Technical data

General: Submit technical data including the following:

- System design parameters: Performance.
- Voice and/or data transfer rate.
- Cable type and characteristics.
- Segregation requirements for EMI/EMR.
- Maximum length of cables.
- Cross-connect type and characteristics.
- Cross-connect block.
- Patch cords.
- Fibre optic terminations.
- Patch panel module.
- Cable management for racks.
- Rack.
- Fly leads.

Samples

Product data and samples: Submit for the following:

- Telecommunications outlet.

Shop drawings

General: Submit showing the following:

- Layouts of equipment racks.
- Cross-connect layout.
- Cabling diagram for complete system.
- Cable management system.

Certification

General: Submit product and installation certification for the installation.

2 PRODUCTS

2.1 NETWORK TERMINATION

Network termination device

General: Provide network termination device as documented.

2.2 DISTRIBUTORS

Equipment racks

General: Provide equipment racks to the **Equipment racks schedule**.

Cross connect patch panels

General: Provide cross connect patch panels as documented.

Terminations: Terminate directly to the modular connector.

Fixed terminations:

- Rear terminals: 45º IDC punch down type.
- Front terminals: RJ45 modular connector.

Patch cords: Terminate cord ends with appropriate registered jacks.

Optical fibre termination panels

Break out trays: Provide fibre optic cable break out trays at each group of fibre optic cable terminations.

Loom cables: Neatly loom cables and lay stripped cables into the break out tray.

Secure cables: Ensure that cables are secured by the sheath and that there is no stress on the fibre optic cores.

Cable management

Record book: Provide a record book at each cross-connect.

Location: Secure log books in each distribution frame records holder.

Identification, labelling, and record documentation: To AS/NZS 3085.1.

2.3 CABLES

Copper

Standard: To AS/ACIF S008.

Balanced system cables: UTP.

Fibre

Standard: To IEC 60793-2-10.

Default type: 6 core multimode OM3 50/125 mμ.

Length: Provide ≥ 1000 mm spare at each end.

Component type: SC.

External

Standard: Water penetration resistance to IEC 60794-1-2.

2.4 TELECOMMUNICATIONS OUTLETS

General

Outlets: Provide RJ45 8 way modular jacks.

Standard: To AS/ACIF S008.

Pinouts: T568A to AS/NZS 3080.

2.5 FLY LEADS

General

Type: Stranded.

Length: 1200 mm.

Quantity: 50% of outlets installed.

2.6 PATCH CORDS

General

Type: Stranded.

Length: 900 mm.

Quantity: 100% of outlets installed.

Termination: Registered jacks.

3 EXECUTION

3.1 GENERAL

General

Standard: To AS/NZS 3084, AS/NZS 3080 and AS/ACIF S009.

Procedure: The space requirements as documented take precedence over the specific space requirements of AS/NZS 3084.

3.2 CABLES

Installation

General: To manufacturers recommendations.

Crossover: Install cables neatly and without crossovers between cables.

Loom size: Loom cables into groups not exceeding 50 cables, and hold looms in place using reusable cable ties at least 20 mm wide. Do not exert compressive force on the cables when installing cable straps.

Cable separation

For safety: To AS/ACIF S009, and by at least 150 mm.

Electromagnetic interference(EMI): To AS HB 29.

Fluorescent luminaires: Maintain a clearance of ≥ 300 mm.

External cables

External cables: To ACIF C524.

3.3 TELECOMMUNICATIONS OUTLETS

Installation

Mounting: Flush mount.

Style, material and colour of plates: To match adjacent power and switch plates.

3.4 EARTHING SYSTEM

General

Standard: to AS/ACIF S009 and SAA HB 29.

Communication earth system

Communication earth system (CES): Provide a communications earth terminal (CET) adjacent to each electrical switchboard. Connect the CET to the local protective earth (PE) system at the switchboard.

Distributor: Provide an earth bar within each distributor and connect to the local CET in accordance with SAA HB 29.

Interconnections: Verify that there are no interconnections between the lightning protective earthing system and the telecommunications earthing system.

3.5 LABELS

Labelling

Telecommunications cables: Label cross-connects and outlets in accordance with the requirements of AS/NZS 3080 and SAA HB 29 Figures 5 – 18.

Cables: Label to indicate the origin and destination of the cable.

Outlets: Label to show the origin of the cross-connect, the workstation or outlet number and the port designation.

Label type table

Component	Label scheme	Type
Cables	Origin and destination	Self adhesive – wrap on
Cross-connects	Port Number	Proprietary
Outlets	SAA HB 29 Fig 5-18	Engraved plate
Wall boxes	SAA HB 29 Fig 5-18	Engraved adhesive label
Patch cords	Type of service	Colour code

3.6 TESTING

Standards

Testing of balanced cabling systems: To AS/NZS IEC 61935.1.

Testing of patch cords: To AS/NZS IEC 61935.2.

General

General: Carry out 100% channel tests.

Tests: To AS/NZS 3080 in conformance with SAA HB 29. Include the following:

- Basic Link and Channel transmission tests including the following:
  - . Wire map.
  - . Length.
  - . Attenuation.
  - . NEXT.
  - . ACR.
  - . Propagation delay.
  - . Delay skew.
  - . Power sum NEXT.
  - . Power sum ACR.
  - . ELFEXT.
  - . Power sum ELFEXT.
  - . Return loss.
- Optical fibre cable: Carry out Basic Link transmission tests including the following:
  - . Length.
  - . Attenuation.

3.7 COMPLETION

Cable management

General: Submit log books for each distribution frame with details of cable terminations and provisions for recording cable, line and jumper information.

Identification and labelling, and record documentation: To AS/NZS 3085.1.

0962 TELEVISION DISTRIBUTION SYSTEMS

1 GENERAL

1.1 AIMS

Responsibilities

General: Provide a system suitable for the reception and distribution of television, video and sound signals as documented.

Network connection: Arrange with the network operator(s) for the connection of their network. Comply with the network operators' requirements.

Designer: Network operator's 'Approved Design Partner'.

Survey: Confirm location and height of Free to Air antenna by on-site measurements.

1.2 SYSTEM DESCRIPTION

System type

Type: As documented.

Performance

General: To AS/NZS 1367.

Capacity: Provide the distribution system with the installed capacity to accommodate 30% additional outlets.

Signal sources

Free to air antennae system: Provide 'free to air' (FTA) antennae system terminating at the premises cabling interface.

Network operator: Provide for the connection of the network operator's system terminating at the premises cabling interface as documented.

Local signal source: Provide television input sockets at the premises cabling head-end for the distribution of in-house television channels on separate channels of the network.

Service entry

General: Provide service entry facilities to suit signal sources, head end equipment and distribution systems.

Location: As documented.

Head end equipment

General: Provide head end equipment to suit signal sources, distribution systems and documented performance.

Location: As documented.

Distribution system

General: Provide a cabling distribution network from the head end equipment to each network distribution tap.

FTA distribution taps: Provide FTA distribution taps.

Network distribution taps: For systems designed for more than one network operator provide individual distribution taps for each network operator. Co-locate the taps with FTA taps in groups to facilitate selected connection or changes to outlet feeders.

Location: Group all equipment as documented.

Outlets
General: Provide outlets and feeders from distribution tap(s) as documented.

Quantity: Provide separate sockets for each source and service.

1.3 CROSS REFERENCES

General
General: Conform to the *General requirements* worksection.

Associated worksections
Associated worksections: Conform to the following:

- *Electrical general requirements*.
- *Cable support and duct systems*.

1.4 STANDARDS

General
System design and performance: To AS/NZS 1367.

Application: Notwithstanding the specific building types inherent in clause 1.1.1 of AS/NZS 1367 the standard is deemed to apply to all building types.

Earthing and segregation: To AS/NZS 3000.

Safety requirements: To AS/NZS 1367 Section 2.

Electromagnetic compatibility: To AS/NZS 1367 Section 3.

1.5 INTERPRETATIONS

Abbreviations
General: For the purposes of this worksection the abbreviations given below apply.

- BER: Bit error ratio.

1.6 SUBMISSIONS

General
Documentation: To AS/NZS 1367 Appendix D.

Certification
Designer: Network operator's 'Approved Design Partner' approval.

Technical data
General: Prior to commencing the work submit the following:

- Design frequencies.
- Free to Air reception quality report, citing methods used for determination. Address all signals that the system is to receive.
- Calculations of signal levels at outlets and at the input and output of amplifiers, splitters and taps.

Correspondence with network operators
Correspondence: Provide copies of correspondence and notes of meetings with all subscription network operators.

Service agreements: Arrange for each service provider to submit service agreements for execution by the principal.

Shop drawings
General: Prior to commencing the work submit the following in accordance with AS/NZS 1367 clause D3 and D4:

- Schematic diagram, proposed location of all components and interconnecting cabling.
- Antennae types and their method of mounting.

Product data
Product data: Submit for all system components.

Samples
System components: Submit samples that are visible after installation, including but not limited to:

- Outlets.
- Labelling.

Record drawings
General: Include minimum and maximum signal frequency (channel) and their levels at the input and output of amplifiers, splitters, taps, tap ports and outlets.

1.7 TESTING

General
Extent: Test 100% of the system to AS/NZS 1367.

Setup: Use locally generated test signals to provide static conditions for level measurements.

Carrier-to-noise measurements: Required.

2 PRODUCTS

2.1 FREE-TO-AIR ANTENNA

General
Standard: To AS 1417.

Material:

- Boom: Galvanized steel.
- Elements: Aluminium ≥ 12 mm.

Connection: F type to IEC 60169-24.

Mounting hardware: Proprietary to suit antenna.

2.2 ACTIVE EQUIPMENT

Masthead amplifier(s)
Selection: To meet system performance requirements.

Head end amplifier(s0
Selection: To meet system performance requirements.

Distribution amplifiers
Selection: To meet system performance requirements.

2.3 PASSIVE EQUIPMENT

Splitters
Selection: To meet system performance requirements.

Couplers
Selection: To meet system performance requirements.

Taps
Selection: To meet system performance requirements.

2.4 COAXIAL CABLE

Types
Standard: To AS/NZS 1367 clause 5.11.

General: Minimum RG6 dual shield.

Underground: Flooded type.

Connectors
Coaxial: F type to IEC 60169-24.

2.5 OUTLETS

General
Outlet type:

- PAL (IEC 60169-2) type socket on the front and "F" type socket on the rear for terrestrial FTA services and down converted satellite services.
- PAL (IEC 60169-2) type on the front and "F" type on the rear for terrestrial FTA services and an "F" type on the front and on the rear for satellite services.
- "F" type socket on the rear and on the front for satellite services.
- "F" type socket on the rear and on the front for cable services.
- PAL (IEC 60169-2) type on the front and "F" type on the rear for terrestrial FTA services and an "F" type on the front and on the rear for cable services.
- PAL (IEC 60169-2) type socket on the front for FM radio services.

Outlet plate: Style, material and colour to match adjacent power and switch plates.

2.6 EXTERNAL COMPONENTS

General
Degree of weather protection: IPX4 to AS 60529.

3 EXECUTION

3.1 GENERAL

Free-to-air antennae
Installation: To AS 1417.1.

3.2 DISTRIBUTION EQUIPMENT

General
Enclosure: Locate all active and passive distribution equipment in proprietary purpose built enclosures, located as documented.

3.3 COAXIAL CABLE

General
Standard: To AS/NZS 1367 Appendix G.

Conduit: Install coaxial cable in conduit or ducting as follows:

Cables	Conduit (minimum)
2 No. double shielded RG6	20 mm
> 1 No. RG6 tri or quad shield	25 mm
> 1 No. double shielded RG11	32 mm

Bending radius: Conform to the minimum bending radius manufacturer's recommendations for the size of cable.

3.4 OUTLETS

Installation
Mounting: Flush mount.

Screening: Fully screen all outlets.

Outlet fly leads
General: Following commissioning of the system, provide 1500 mm fly leads to all outlets.

0971 EMERGENCY EVACUATION LIGHTING

1 GENERAL

1.1 AIMS

Responsibilities
General: Provide single point emergency lighting and exit signs as follows and as documented.

1.2 CROSS REFERENCES

General
General: Conform to the *General requirements* worksection.

Associated worksections
Associated worksections: Conform to the following:

- *Electrical general requirements.*
- *Low voltage power systems.*
- *Luminaires – custom-built.*

1.3 STANDARDS

General
System design, installation and operation:
AS 2293.1.

Inspection and maintenance: To AS/NZS 2293.2.

1.4 SUBMISSIONS

Samples
General: Submit samples of all luminaires and exit signs.

Technical data
General: Submit technical data for each type of luminaire and exit sign including the following:

- Maximum luminaire spacing for a given mounting height.
- Luminaire classification to AS 2293.3.
- Central battery and charger performance test reports, including discharge and charging characteristics.

Type test data
General: Submit type test data.

Shop drawings
General: Submit the following:

- Construction details, overall dimensions and wiring arrangement for each custom built luminaire and exit sign.
- Details of the central monitoring and testing facility.
- For central systems:
  - Construction details and layout of the power source.
  - Details of room or enclosure housing the power source, including ventilation requirements.
  - Details of wiring method.

2 PRODUCTS

2.1 SINGLE-POINT SYSTEM LUMINAIRES

General
Visual indicator lights: Provide a red indicator, readily visible when the luminaire is in its operating location, which indicates that the battery is being charged.

Inverter system: Provide protection of the inverter system against damage in the event of failure, removal or replacement of the lamp, while in normal operation.

Local test switches: Provide a momentary action test switch, accessible from below the ceiling, on each luminaire to temporarily disconnect the mains supply and connect the battery to the lamp.

Common test switches: Provide a common test switch on the local distribution board which disconnects main supply to the luminaires and tests for discharge performance. After testing, this switch must automatically revert to normal operating mode.

Monitored system
Data connection: Provide internal monitoring facilities and provision for the connection of data cabling to a central monitoring computer.

Batteries
Type: Lead-acid or nickel-cadmium batteries capable of operating each lamp at its rated output continuously at least 2 hours during completion tests and 1.5 hours during subsequent tests.

Battery life: At least 3 years when operating under normal conditions at an ambient temperature of 25°C and subjected to charging and discharging at 6 monthly intervals.

Marking: Indelibly mark each battery with its date of manufacture.

2.2 CENTRAL SYSTEM LUMINAIRES

Fluorescent luminaires
General: Provide inverters and transformers to operate lamps from the central power supply.

Tungsten halogen luminaires
General: Provide inverters suitable for lamp wattage.

Power supply
Batteries
General: Provide a dedicated lead-acid or nickel-cadmium battery and charger system which is as follows:

- Provides the operating voltage to luminaires at the most distant point of the system.
- Is of sufficient capacity to energise the system for at least 2 hours during completion tests.

Battery life
General: At least 10 years when operating under normal conditions at an ambient temperature of 25°C and subjected to charging and discharging at 6 monthly intervals.

Charger design
General: Provide a constant voltage type charger as follows:

- Provides a continuous trickle charge which maintains the battery system in a fully charged condition.
- Has circuitry which monitors and automatically limits charging current and output voltage.

Maximum charge current: 1.25 x rated output.

Maximum battery terminal voltage: 10% above nominal battery voltage.

Capacity: Sufficient to:

- Withstand a short circuit at the output terminals.
- Limit the current to the rated maximum output.

Instruments: Provide voltmeters and ammeters which monitor battery terminal voltage, load current, charger voltage and charger current.

Remote alarm connections: Provide a set of voltage free relay contacts for transmission of the following alarms:

- Loss of normal supply to the charger.
- Low battery voltage.
- Loss of battery supply.

Inverter: For a.c. central systems, limit the input supply total harmonic distortion generated by the inverter to a maximum of 5%.

Monitored system

Data connection: Provide monitoring facilities and provision for the connection of data cabling to a central monitoring computer.

2.3 MONITORING SYSTEM

Proprietary systems

General: Provide proprietary systems with full compatibility between the monitoring system, operating software and the luminaries selected.

3 EXECUTION

3.1 SINGLE POINT SYSTEM

Power supply

General: Provide an unswitched active supply to each luminaire and exit sign, originating from the test switch control panel.

Data monitoring

General: If a monitoring system is documented, provide a data cable system from each single-point luminaire and connect to the monitoring computer.

Test switch

General: Provide a timed test switch at each distribution board.

Function: To energise emergency lights and exit signs and then to automatically reset controls after a maximum of 2 hours.

3.2 CENTRAL SYSTEM

Power supply

General: Provide an isolated supply from the central system via a segregated wiring system.

Test switch

General: Provide a timed test switch at each central system distribution board.

Function: To energise emergency lights and exit signs from the central system and then automatically reset after a maximum of 2 hours.

3.3 MARKING AND LABELLING

Labelling

General: Label each luminaire with a unique identifying number and record the number and luminaire location in a schedule included in the emergency evacuation lighting operation and maintenance manual. The label must be permanently fixed, indelible and readable at a distance of 1 m.

3.4 TESTS

General

General: Carry out tests, including out-of-hours tests, to demonstrate the emergency and evacuation system's performance. Include the following:

- Test components for correct function and operation.
- Demonstrate illumination performance on site, to at least the level stated in the manufacturer's performance specification for that device.
- Test operation of battery discharge test and control test switch functions, including discharge and restoration.
- Demonstrate system functions under mains fail condition.
- Demonstrate operation of the battery and charger including a full discharge/recharge over the designated time.

Mains supply

General: Before commissioning, ensure mains supply has been continuously connected for at least 24 hours.

3.5 COMPLETION

Maintenance

Emergency evacuation lighting: To AS 2293.2.

Interval: Carry out the 6-monthly procedures before practical completion and again before the end of the maintenance period.

0972 FIRE DETECTION AND ALARMS

1 GENERAL

1.1 AIMS

Responsibilities
General: Provide fire detection and alarm systems as follows and as documented.

1.2 SYSTEM DESCRIPTION

General
System type: Addressable.

Interface: Emergency warning and intercommunications system.

1.3 CROSS REFERENCES

General
General: Conform to the *General requirements* worksection.

Associated worksections
Associated worksections: Conform to the following:

- *Electrical general requirements*.
- *Emergency warning and intercommunication*.

1.4 STANDARD

General
Standard: To AS 1670.1 and AS 7240.13.

1.5 SUBMISSIONS

Technical data
Product data: Submit for the following:

- Fire indicating panel.
- Detectors.
- Manual call points.
- Alarm bells.
- Magnetic door holders.

Samples
Samples: Submit for the following:

- Detectors.
- Manual call points.
- Alarm bells.
- Magnetic door holders.

Shop drawings
General: Submit showing the following:

- Fire detector layout.
- Dimensions and details of control and indicating equipment.
- Location.
- Circuit identification.
- Labelling details.

2 PRODUCTS

2.1 AUTHORISED PRODUCTS

General
Equipment: Provide equipment listed in the ActivFire Register of Fire Protection Equipment.

2.2 CONTROL AND INDICATING EQUIPMENT

Standards
General: To AS 7240.2.

Air-handling fire mode control panels: To AS 4428.7.

Alarm investigation facility (AIF): To AS 4428.10.

Alarm signalling equipment: To AS 4428.6.

Power supply units: To AS 4428.5.

Fire fighters interface: To AS 4428.3.

Routing equipment: To AS 7240.21.

Wire-free alarm zone circuits: To AS 4428.9.

Fire indicator panels
General: Provide metal cubicle-type enclosures.

Isolation
Isolating facilities: Provide on fire indicator panels to enable tests to be carried out without the transmission of alarm signals to the fire brigade.

Capacity
Spare zones: 50% minimum.

2.3 DETECTORS

Standards
Carbon monoxide (CO) fire detectors: To AS 7240.6.

Duct sampling units (DSUs): To AS 1603.13.

Heat detectors: To AS 7240.5.

Point type smoke detectors: To AS 7240.7.

Integral heat detector/alarm units: To AS 1603.3.

Integral smoke detector/alarm units: To AS 12239.

Multi-sensor fire detectors: To AS 7240.15.

Multi-point aspirated smoke detectors: To AS 1603.8.

Optical beam smoke detectors: To AS 1603.7.

Point type smoke detectors: To AS 1603.2.

Remote indicators: To AS 1603.15.

Visual warning devices: To AS 1603.11.

Self-indicating detectors
General: Provide a light emitting diode mounted in a clearly visible position, which illuminates whenever detector operation causes an alarm condition to register on the fire indicator panel. Provide self-indicating devices which, if faulty, will not render the detector inoperative under fire conditions.

Mounting positions of light emitting diodes:

- Visible detectors: On the outside of the detector or its base.
- Detectors concealed above ceilings: On the underside of the ceiling immediately below the detector.

- Detectors in other concealed spaces: On a visible panel close to the entry to the concealed space housing the detector.
- Remote indicators: To AS 1603.15.

2.4 MANUAL CALL POINTS

General
Standard: To AS 1603.5.

2.5 EXTERNAL ALARM INDICATION

Standards
Bell circuits: To AS 4428.1.

Strobe lights: To AS 1603.11.

Power supply
To the strobe light and ≤ 2 others: From the fire indicator panel battery power supply.

To additional strobe lights: From the mains supply. Provide appropriate interface relays, operated by the fire indicator panel.

2.6 MAGNETIC DOOR HOLDERS

General
Standard: To AS 4178.

Control facilities
Standard: To AS/NZS 1668.1.

Signals: Provide ancillary control device circuits and connections for automatically controlling and releasing magnetic door holders to operate the relevant doors under fire alarm conditions.

2.7 WARNING SYSTEM

General
Occupant warning system: To AS 1670.4 Section 3.22.

2.8 POWER SUPPLY

General
Surge protection: Ensure that normal operation is maintained and that voltage surges in the power source do not damage the control and indicating equipment.

Sealed batteries: Cycle the batteries before practical completion so that ≥ 100% of nominal capacity is available at practical completion.

3 EXECUTION

3.1 FIRE ALARM MONITORING

General
Standard: To AS 7240.21.

Connection: Connect the installation to a monitoring service provider. Connect using telecommunications fixed wire carrier lines.

3.2 DETECTORS

Installation
General: Install detectors so they can be easily inspected and tested in situ, and readily withdrawn from service.

Integral smoke detector/alarm units: To AS 1670.6.

3.3 INSTALLATION WIRING

General
To AS 1670.1 Section 3.24.

3.4 AIR HANDLING SYSTEMS

Fire fan control and indication panels (FFCP)
Standard: To AS/NZS 1668.1.

Signals: Provide fire detection and alarm signals for the fire fan control and indication panel (FFCP).

3.5 TESTING

General
Tests: Carry out tests, including out-of-hours tests, to demonstrate the automatic fire detection and alarm system's performance to AS 1670.1 Section 7 and the compliance Sections of the relevant parts of the AS 1603 series. Include the following:

- Test components for correct function and operation.
- Demonstrate detection and alarm performance on site, to at least the level stated in the manufacturer's performance specification for that device.
- Test alarm zone identification.
- Demonstrate air sampling system operation for 14 days with data logger to verify stability of detectors and devices.
- Demonstrate addressable device operation for 14 days with data logger to verify stability of detectors and devices.
- Test interface to interconnected systems.
- Demonstrate correct shutdown sequences during fire mode.
- In situ testers: To AS 1603.16.

3.6 COMPLETION

Maintenance
Maintenance and records: To AS 1851.

0973 EMERGENCY WARNING AND INTERCOMMUNICATION

1 GENERAL

1.1 AIMS

Responsibilities
General: Provide intercommunication and sound systems for emergency purposes as follows and as documented.

1.2 CROSS REFERENCES

General
General: Conform to the *General requirements* worksection.

Associated worksections
Associated worksections: Conform to the following:
- *Electrical general requirements*.
- *Cable support and duct systems.*
- *Fire detection and alarms.*

1.3 STANDARDS

General
Intercommunication system: To AS 1670.4 and AS 4428.4.

Sound system: To AS 1670.4 and AS 60849.

1.4 SUBMISSIONS

Technical data
General: Submit product data for all components.

Samples
General: Submit samples of the following:
- Visual alarm devices.
- Speakers.
- Handsets.

Shop drawings
General: Submit shop drawings showing the following:
- Panel layouts and enclosures including associated building works.
- Cabling diagrams.
- Equipment layout.
- Speakers, handsets, visual alarm devices and wiring layouts.
- Warden intercommunication points.
- Loudspeaker enclosures.

Test reports
General: Submit test reports as follows:
- Sealed batteries test report.
- Commissioning test report.
- System installer's statement.
- System test certificates.
- System information in the forms provided in AS 1670.4.

2 PRODUCTS

2.1 GENERAL

Authorised products
General: Provide equipment listed in the ActivFire Register of Fire Protection Equipment.

2.2 CONTROL AND INDICATING EQUIPMENT (CIE)

General
Type: Common unit for intercommunication and sound systems.

2.3 SOUND SYSTEM

System
Type: 100 volt.

Zoning: ≥ 1 per building, level and fire zone.

Signal source: automatic and local microphone at CIE.

Amplifiers
Selection: Select and adjust to meet performance requirements.

Type: 100 volt.

Quantity: ≥ 1 per zone.

Non-emergency input terminals: ≥ 1 per amplifier.

Location: within CIE.

Speakers
Selection: select and adjust to meet performance requirements.

Type: Tapped 100 volt.

Emergency call points
General: Required.

3 EXECUTION

3.1 GENERAL

Field wiring
General: To *Electrical general requirements* and *Cable support and duct systems.*

3.2 CONTROL AND INDICATING EQUIPMENT (CIE)

General
Mounting: Flush mount in location as documented.

Enclosure: Coordinate with surrounding building works.

3.3 SOUND SYSTEM

Loudspeakers
Mounting: Securely fix to building elements.

Flush mounting: Required in suspended ceilings.

Wall mounting: 150 mm below finished ceiling level to top of speaker enclosure.

3.4 INTERCOMMUNICATION SYSTEM

Warden intercommunication points

Connection: Provide separate circuits for each WIP handset.

Conferencing: Provide switching facilities which permit conference calls, between up to 5 warden intercommunication points, to be initiated from any emergency control panel.

Lift cars: Provide a terminal block outside the lift motor room. Cable from the terminal block to central control equipment. Provide a warden intercommunication point handset in each fire lift car.

3.5 COMPLETION

Operational and maintenance manual

Standard: To AS 4428.4.

Maintenance

Standard: To AS 1851.

General: Perform Level 2 maintenance routines.

0979 LIGHTNING PROTECTION

1 GENERAL

1.1 AIMS

Responsibilities

General: Provide a lightning protection system as follows and as documented.

1.2 CROSS REFERENCES

General

General: Conform to the *General requirements* worksection.

Associated worksections

Associated worksections: Conform to the following:

- *Electrical general requirements*.

1.3 STANDARD

General

Lightning protection system: To AS/NZS 1768.

1.4 SUBMISSIONS

Shop drawings

General: Submit layout drawings of the lightning protection system showing the following information:

- Details of the locations and types of joints, air and earth terminations, downconductors, materials used, and provisions for minimising galvanic action.
- Arrangement of components in earthing pits.
- Provision for building movement and building penetrations.
- Details of bonding to other high level and in-ground services entering, or in the vicinity of, the building.

1.5 TESTING

General

Standard: To AS/NZS 1768.

2 EXECUTION

2.1 INSTALLATION

General

Standards: To AS/NZS 1768.

Thermal expansion

General: Provide expansion loops in horizontal air terminations between fixing points.

Air terminations

General: Provide air terminations to the **Air terminations schedule**.

Down conductors

General: Provide down conductors to the **Down conductors schedule**.

Test links
General: Provide test links to the **Test links schedule**.

Earth terminations
General: Provide earth terminations to the **Earth terminations schedule**.

Bonding
General: Provide bonding to the **Bonding schedule**.

Foundation or footing bonding: Provide threaded terminals welded to reinforcement.

Electrode pits
General: Locate driven earth electrodes in dedicated pits.

Marking: Mark pit covers with the words '*Lightning protection earth*'.

2.2 COMPLETION

Records
Standard: To AS/NZS 1768.

0981 ELECTRONIC SECURITY

1 GENERAL

1.1 AIMS

Responsibilities
General: Provide electronic security systems as follows and as documented.

Security classification: As documented.

System provider
Electronic security system provider: A licensed security organisation only.

1.2 CROSS REFERENCES

General
General: Conform to the *General requirements* worksection.

Associated worksections
Associated worksections: Conform to the following:

- *Building IT components*.
- *Electrical general requirements*.
- *Cable support and duct systems*.
- *Uninterruptible power supply*.
- *Telecommunications cabling*.

1.3 STANDARDS

Intruder alarm systems
General: To AS/NZS 2201.1.

Alarm transmission system: To AS/NZS 2201.5.

Internal detection devices: To AS 2201.3.

Wire free systems: To AS 2201.4.

CCTV systems
General: To AS 4806.2.

Remote monitored systems: To AS 4806.4

1.4 SUBMISSIONS

Samples
General: Submit samples of the following:

- Door contacts and reed switches.
- Key or card readers.
- Electric door strikes and door release devices.
- Duress alarm switches.

Records
General: Submit records to AS/NZS 2201.1.

Licence: Submit copy.

Technical data
General: Submit data showing dimensions and space requirements for the following:

- Door contacts and reed switches.
- Detection devices.
- Key or card readers.
- Electric door strikes and door release devices.

- Television monitors, cameras and associated equipment.
- Intercom stations.
- Vehicle control systems.
- Duress alarm switches.

Shop drawings
General: Prior to commencing work submit shop drawings showing the following:
- Schematic diagram of all systems.
- Panel layouts and dimensions.
- Power supply requirements.
- Wiring access necessary for door frames.
- Cut out dimensions.
- Fixing provisions for cameras and monitors.

2 PRODUCTS

2.1 GENERAL

Alarm system panels or processors
Capacity: Provide separate sectors for each nominated internal access zone, and for normally-closed and normally-open perimeter access zones.

Tamper alarms: Provide tamper protection and alarms.

Sector time delay: Provide one adjustable time delay entry/exit sector, with adjustment range 0 to 30 s and tamper protection.

Batteries and chargers:
- Sealed battery: Provide a sealed battery and charger system contained within each control panel with capacity as scheduled.

Activation
Activation device: Provide keypads, card readers and other activation devices as documented.

External: Provide weatherproof (IP56) hoods or housings for external units.

Default mounting height: 1100 mm from floor level.

External audible and visual alarms
General: Provide a corrosion-resistant weatherproof metal enclosures containing sirens and blue strobe lights. Fix in locations not readily accessible without a ladder.

Anti-tamper devices
Anti tamper devices: Provide anti-tamper devices to control panels, external equipment, control and activating devices, and access control devices.

Function: To register an instantaneous alarm if covers are removed or vital wiring is disconnected.

Alarm circuit supervision
Alarm circuit supervision: At each detection device, provide alarm circuit supervision by means of an end-of-line device connected via a separate circuit within the cable.

Function: To register an instantaneous alarm if cable characteristics change, such as when cut or short circuited.

Event logging printer
Printer: Provide an event logging printer connected to the alarm and access control panel.

Function: To generate a printed report showing the date, time and category of alarm initiations and access control entries.

Remote monitoring
Duration: Provide remote monitoring for the duration of the defects liability period.

Monitoring system: Provide a monitoring system in the alarm panel or processor for transmission of alarms and monitoring of the system by parties responsible for attending to alarms.

2.2 ACCESS CONTROL

Access control processors or panels
Capacity: Provide separate entry/exit control modules for each designated door.

Users: Program the system to match the number of authorised users with unique access codes.

Time zones: At least 4 per day, with provision for weekends and public holidays.

Door control devices
General: Provide electric strikes, electric locks, drop bolts, or similar devices to suit door construction and hardware.

Fail-safe: Connect door control devices in a fail-safe mode to permit egress in the event of power failure.

Authorised products: Provide equipment listed in the ActivFire Register of Fire Protection Equipment.

Glass doors: Provide tumbler, drop bolts or magnetic holders.

Double leaf doors (solid frame): Provide an electric strike or lock on the fixed leaf, connected to the door frame by concealed flexible wiring.

Vehicle control
Vehicle access control: Provide vehicle access control system combining connection to vehicular doors and boom gates, and interconnection to the main access control system.

Exit loop detection: Provide a buried loop detection system adjacent to the exit point to activate boom gates or vehicular doors on approach by a vehicle. Connect so that doors or gates close after a pre-set time.

Interlock: Provide a photo electric beam safety interlock.

Interlock function: To prevent door or gate from closing until the vehicle has cleared the exit point.

Push-buttons and readers: Where practicable, provide direct wall mounting for push-buttons or readers; otherwise provide a robust mounting bollard and extension arm.

Default mounting height: 1000 mm from floor level.

Reed switches: Provide heavy duty reed switches on both sides of vehicle doors to generate a door closed indication at the control panel.

Intercom
Base station: Provide intercom base station, interconnected with the individual local stations. Include speakers and microphones.

Entry station construction: Wall mounted flush stainless steel panel.

Weatherproofing: IP56.

Dial: Digital push-button type.

Schedule: Provide a weatherproof (IP56) schedule holder and card identifying individual local stations. Locate next to the base station intercom panel.

Local station: Provide wall mounted intercom local stations, interconnected with the base stations.

Internal station type: Surface mounted, removable handset type.

Operation: Provide an audible tone device to indicate that the individual station is being called, and a press-to-talk switch so that the entry station can communicate with the internal station only when the switch is held down.

Door control: Provide integral momentary action door release switches to operate the door release or opening mechanisms at each external entry point.

2.3 INTRUDER ALARM

Movement detection devices

General: Provide movement detectors as documented.

Selection: To provide detection within the space occupied by the detector. Provide additional detectors to achieve coverage as necessary.

PIR detectors: Mirror optic type with ≥ 7 curtains.

Installation: To AS/NZS 2201.1.

Door contacts

Reed switches: Provide magnetic reed switches which operate when:

- A personnel door is opened > 20 mm at the lock/latch edge.
- The fixed leaf of a double door is opened > 20 mm at the lock/latch edge.
- A vehicular door is opened > 100 mm.

Door lock sensors: Provide micro switches or magnetic contacts in lock keepers or door locks which incorporate a bolt movement sensing device.

Function: To detect bolt movements > 10 mm.

Duress alarm switches

Desk or furniture mounting: Provide plug socket connections for duress alarm switches fixed to items of furniture. Conceal wiring and secure to avoid accidental disconnection.

Wall mounting: Recessed at 900 mm above finished floor level.

Disconnection alarm: Connect so that removal of plugs from sockets will automatically register as a duress alarm.

2.4 VIDEO MONITORING

CCTV cameras

Positioning and adjustment: Position and aim cameras to provide optimum coverage and to minimise the effect of shadows or direct light sources.

Lenses: Provide lenses with apertures and focal lengths selected to provide coverage of designated areas and to enable persons within the field of view to be readily distinguishable on monitors.

Motorised cameras: Provide camera drives which provide remote control of camera rotation and tilt, and of lens focal length.

External cameras: Provide corrosion-resistant weatherproof housings for cameras located externally, which allow cameras to perform to manufacturer's specification.

Fixing: Provide mounting brackets and hardware which rigidly fix cameras, monitors and accessories to buildings or structures.

CCTV monitors

General: Provide monitors compatible with the rest of the security system, and provide fixing brackets and hardware for wall-mounted and ceiling-mounted monitors.

CCTV recorders

General: Provide CCTV recording systems which stores the data in a digital form on electronic medium (e.g. hard disk). The recording device must provide the following:

- Index according to events.
- Fast search.
- Frame by frame search.
- Frame printing.
- Zoom and pan within a recorded frame.
- Back up daily to off-site storage.

Minimum data storage: 30 days.

CCTV video switching system

General: Provide a switching system which enables each camera to be scanned sequentially at predetermined intervals and which, on receipt of an alarm signal, interrupts the scanning sequence and switches to the relevant security zones.

3 EXECUTION

3.1 GENERAL

Mains supplies

Permanent power supply: Provide permanent power supply to the following:

- Intruder alarm panels and access control panels including sub panels.
- Electric door strike local panels or control equipment.
- Intercom stations.
- CCTV monitors and cameras.
- Intercom stations.

Marking: Label the switchboard circuit breaker from which power for the security systems is obtained: *SECURITY SYSTEM - Do not switch off.*

Uninterruptible power supply

General: Provide a dedicated uninterruptible power supply and connect to the alarm or access control system, or both.

Capacity: At least 15 minutes, for the complete system in normal operation.

Interconnection to other services

General: Provide functions and equipment to allow the interconnection to other systems. Provide and connect wiring to the designated services.

Lifts: Arrange for installation and connection of lift readers and associated equipment.

Completion

Manuals

- Standard: Submit records to AS/NZS 2201.1.

Completion tests: Carry out tests, including out-of-hours tests, to demonstrate the security system's performance. Include the following:

- Test components for correct function and operation.
- Demonstrate that devices perform on site, to at least the level stated in the manufacturer's performance specification for that device.
- Test the operation of alarm sectors and panel functions, including open and short circuit tests.
- Demonstrate that the system functions under mains fail condition.
- Demonstrate operation of the battery and charger including a full discharge/recharge over the designated time.

Maintenance:

- Standard: To AS/NZS 2201.1.
- Breakdown call outs: Attend on site within 24 hours of notification. Rectify faults, and replace faulty materials and equipment.
- Frequency of routine visits: ≤ 3 monthly.

Maintenance period performance monitoring

- Monitor: Access control system.
- Investigate: Causes of alarms.
- Alarm Report: < 2 days after alarm.

False alarms:

- Notification of false alarms: On the first working day after a false alarm, submit notification of the circumstances surrounding the false alarm and action necessary to prevent similar occurrences.
- Alterations due to false alarms: Carry out alterations necessary to eliminate false alarms due to the following:
  . Technical faults, selection, siting or aiming of devices.
  . Environmental conditions evident at the time of installation.

REFERENCED DOCUMENTS

AS/ACIF S008	2006	Requirements for customer cabling products
AS/ACIF S009	2006	Installation requirements for customer cabling (Wiring Rules)
AS/NZS CISPR 15	2006	Limits and methods of measurement of radio disturbance characteristics of electrical lighting and similar equipment (CISPR 12:2000, MOD)
AS 1055		Acoustics
AS 1055.1	1997	Description and measurement of environment noise - General procedures
AS 1074	1989	Steel tubes and tubulars for ordinary service
AS 1100		Technical drawing
AS 1100.101	1992	General principles
AS 1100.301	1985	Architectural drawing
AS 1102		Graphical symbols for electrotechnical documentation
AS 1102.101	1989	General information and general index
AS 1102.102	1997	Symbol elements, qualifying symbols and other symbols having general application
AS 1102.103	1997	Conductors and connecting devices
AS 1102.106	1997	Production and conversion of electrical energy
AS 1102.107	1997	Switchgear, controlgear and protective devices
AS 1102.108	1997	Measuring instruments, lamps and signalling devices
AS 1102.111	1997	Architectural and topographical installation plans and diagrams
AS 1110		ISO metric hexagon bolts and screws - Product grades A and B
AS 1110.1	2000	Bolts
AS 1110.2	2000	Screws
AS 1111		ISO metric hexagon bolts and screws - Product grade C
AS 1111.1	2000	Bolts
AS 1111.2	2000	Screws
AS 1112		ISO metric hexagon nuts
AS 1112.1	2000	Style 1 - Product grades A and B
AS 1112.2	2000	Style 2 - Product grades A and B
AS 1112.3	2000	Product grade C
AS 1112.4	2000	Chamfered thin nuts - Product grades A and B
AS 1141		Methods for sampling and testing aggregates
AS 1141.11	1996	Particle size distribution by sieving
AS 1141.12	1996	Materials finer than 75 um in aggregates (by washing)
AS 1141.14	2007	Particle shape, by proportional caliper
AS 1141.14	1995	Particle shape, by proportional caliper
AS 1141.15	1999	Flakiness index
AS 1141.18	1996	Crushed particles in coarse aggregate derived from gravel
AS 1141.22	1996	Wet/dry strength variation
AS 1141.23	1995	Los Angeles value
AS 1141.24	1997	Aggregate soundness - Evaluation by exposure to sodium sulfate solution
AS 1141.42	1999	Pendulum friction test
AS 1152	1993	Specification for test sieves
AS/NZS 1158		Lighting for roads and public spaces
AS/NZS 1158.0	2005	Introduction
AS/NZS 1158.1.1	2005	Vehicular traffic (Category V) lighting - Performance and design requirements
AS/NZS 1158.1.3	1997	Road lighting - Vehicular traffic (Category V) lighting - Guide to design, installation, operation and maintenance
AS/NZS 1158.2	2005	Computer procedures for the calculation of light technical parameters for Category V and Category P lighting
AS/NZS 1158.3.1	2005	Pedestrian area (Category P) lighting - Performance and design requirements
AS 1158.4	1987	The lighting of urban roads and other public thoroughfares - Supplementary lighting at pedestrian crossings
AS/NZS 1158.6	2004	Luminaires
AS 1163		Structural steel hollow sections
AS/NZS 1167.1	2005	Welding and brazing - Filler metals Filler metal for brazing and braze welding
AS/NZS 1170		Structural design actions
AS/NZS 1170.0	2002	General principles
AS/NZS 1170.1	2002	Permanent, imposed and other actions
AS 1170.2	1989	Minimum design loads on structures Wind loads
AS/NZS 1170.2	2002	Wind actions
AS/NZS 1170.3	2003	Snow and ice actions
AS 1170.4	1993	Minimum design loads on structures (known as the SAA Loading Code) Earthquake loads
AS 1181	1982	Method of measurement of civil engineering works and associated building works
AS 1192	2004	Electroplated coatings - Nickel and chromium
AS 1214	1983	Hot-dip galvanized coatings on threaded fasteners (ISO metric coarse thread series)
AS 1231	2000	Aluminium and aluminium alloys - Anodic oxidation coatings
AS 1237.1		Plain washers for metric bolts, screws and nuts for general purposes
AS 1237.1	2002	General plan
AS 1284.1	2004	General purpose induction watthour meters
AS 1284.4	2006	Socket mounting system
AS 1288		Methods of testing soils for engineering purposes

AS 1289.3.1.1	1995	Soil classification tests - Determination of the liquid limit of a soil - Four point Casagrande method
AS 1289.3.3.1	1995	Soil classification tests - Calculation of the plasticity index of a soil
AS 1289.3.6.1	1995	Soil classification tests - Determination of the particle size distribution of a soil - Standard method of analysis by sieving
AS 1289.3.6.3	2003	Determination of particle size distribution of a soil - Standard method of fine analysis using a hydrometer
AS 1289.3.7.1	2002	Soil classification tests - Determination of the sand equivalent of a soil using a power-operated shaker
AS 1289.4.2.1	1997	Determination of the sulfate content of a natural soil and the sulfate content of the groundwater - Normal method
AS 1289.4.3.1	1997	Determination of the pH value of a soil - Electrometric method
AS 1289.4.4.1	1997	Determination of the electrical resistivity of a soil - Method for sands and granular materials
AS 1289.5.1.1	2003	Soil compaction and density tests- Determination of dry density/moisture content relation of a soil using standard compactive effort
AS 1289.5.2.1	2003	Soil compaction and density tests- Determination of dry density/moisture content relation of a soil using modified compactive effort
AS 1289.5.3.2	2004	sand replacement method using a sand pouring can, with or without a volume displacer
AS 1289.5.3.5	1997	Soil compaction and density tests- Determination of the field dry density of a soil - Water replacement method
AS 1289.5.4.1	2007	Soil compaction and density tests - Compaction control test - Dry density ratio, moisture variation and moisture ratio
AS 1289.5.5.1	1998	Soil compaction and density tests - Determination of the minimum and maximum dry density of a cohesionless material - Standard method
AS 1289.5.6.1	1998	Soil compaction and density tests - Compaction control test - Density index method for a cohesionless material
AS 1289.5.7.1	2006	Soil compaction and density tests- Compaction control test - Hilf density ratio and Hilf moisture variation
AS 1289.5.8.1	2007	Soil compaction and density tests - Determination of field density and field moisture content of a soil using a nuclear surface moisture-density gauge - Direct transmission mode
AS 1289.6.1.1	1998	Soil strength and consolidation tests- Determination of the California Bearing Ratio of a soil - Standard laboratory method for a remoulded specimen
AS 1319	1994	Safety signs for the occupational environment
AS 1345	1995	Identification of the contents of pipes, conduits and ducts
AS 1359		Rotating electrical machines-General requirements
AS 1359.0	1998	Introduction and list of Parts
AS 1359.30	1997	Preferred outputs and frame sizes
AS 1359.31	1997	Three-phase induction motors - Operation on unbalanced voltages
AS 1359.101	1997	Rating and performance
AS 1359.102.1	1997	Methods for determining losses and efficiency - General
AS 1359.102.2	1997	Methods for determining losses and efficiency - Calorimetric method
AS 1359.106	1996	Methods of cooling (IC Code)
AS 1359.107	1996	Classification of types of construction and mounting arrangements (IM Code)
AS 1359.109	1998	Noise limits
AS 1359.114	1997	Vibration measurement and limits
AS/NZS 1367	2007	Coaxial cable and optical fibre systems for the RF distribution of analog and digital television and sound signals in single and multiple dwelling installations
AS/NZS 1390	1997	Cup head bolts with ISO metric coarse pitch threads
AS/NZS 1393	1996	Coach screws - Metric series with ISO hexagon heads
AS 1397	2001	Steel sheet and strip - Hot-dipped zinc-coated or aluminium/zinc-coated
AS 1417		Receiving antennas for radio and television in the frequency range 30 MHz to 1 GHz
AS 1417.1	1987	Construction and installation
AS 1420	2001	ISO metric hexagon socket head cap screws
AS/NZS 1421	1996	ISO metric hexagon socket set screws
AS/NZS 1427	1996	ISO metric machine screws
AS 1443	2004	Carbon steels and carbon-manganese steel - Cold-finished bars
AS 1450	1983	Steel tubes for mechanical purposes
AS 1450	2007	Steel tubes for mechanical purposes
AS 1470	1986	Health and safety at work - Principles and practices
AS/NZS 1477	2006	PVC pipes and fittings for pressure applications
AS/NZS 1530		Methods for fire tests on building materials, components and structures
AS/NZS 1530.3	1999	Simultaneous determination of ignitability, flame propagation, heat release and smoke release
AS 1530.4	2005	Fire-resistance test of elements of construction
AS/NZS 1554		Structural steel welding
AS/NZS 1554.1	2004	Welding of steel structures
AS/NZS 1554.6	1994	Welding stainless steels for structural purposes
AS 1565	1996	Copper and copper alloys - Ingots and castings
AS 1566	1997	Copper and copper alloys - Rolled flat products
AS/NZS 1567	1997	Copper and copper alloys-Wrought rods, bars and sections
AS/NZS 1580		Paints and related materials - Methods of test
AS/NZS 1580.107.3	1997	Determination of wet film thickness by gauge
AS/NZS 1595	1998	Cold-rolled, unalloyed, steel sheet and strip

AS 1603		Automatic fire detection and alarm systems
AS 1603.2	1997	Point type smoke detectors
AS 1603.3	1996	Heat alarms
AS 1603.5	1996	Manual call points
AS 1603.7	1996	Optical beam smoke detectors
AS 1603.8	1996	Multi-point aspirated smoke detectors
AS 1603.11	2001	Visual warning devices
AS 1603.13	1998	Duct sampling units
AS 1603.15	2002	Remote indicators
AS 1603.16	2002	In situ testers
AS 1627		Metal finishing - Preparation and pretreatment of surfaces
AS 1627.4	2005	Abrasive blast cleaning of steel
AS 1627.9	2002	Pictorial surface preparation standards for painting steel surfaces
AS 1657	1992	Fixed platforms, walkways, stairways and ladders - Design, construction and installation
AS 1665	2004	Welding of aluminium structures
AS/NZS 1668		The use of ventilation and airconditioning in buildings
AS/NZS 1668.1	1998	Fire and smoke control in multi-compartment buildings
AS 1670		Fire detection, warning control and intercom systems - System, design, installation and commissioning
AS 1670.1	2004	Fire
AS 1670.4	2004	Sound systems and intercom systems for emergency purposes
AS 1670.6	1997	Smoke alarms
AS/NZS 1677		Refrigerating systems
AS/NZS 1677.2	1998	Safety requirements for fixed applications
AS/NZS 1680		Interior lighting
AS/NZS 1680.0	1998	Safe movement
AS/NZS 1680.1	2006	General principles and recommendations
AS 1680.2.1	1993	Circulation spaces and other general areas
AS 1680.2.2	1994	Office and screen-based tasks
AS 1680.2.3	1994	Educational and training facilities
AS/NZS 1680.2.4	1997	Industrial tasks and processes
AS/NZS 1680.2.5	1997	Hospital and medical tasks
AS 1680.3	1991	Measurement, calculation and presentation of photometric data
AS/NZS 1734	1997	Aluminium and aluminium alloys - Flat sheet, coiled sheet and plate
AS 1741	1991	Vitrified clay pipes and fittings with flexible joints - Sewer quality
AS/NZS 1768	2007	Lightning protection
AS 1769	1975	Welded stainless steel tubes for plumbing applications
AS 1789	2003	Electroplated zinc (electrogalvanized) coatings on ferrous articles (batch process)
AS 1798	1992	Lighting poles and bracket arms - Preferred dimensions
AS/NZS 1801	1997	Occupational protective helmets
AS 1851		Maintenance of fire protection systems and equipment
AS 1851.8	1987	Automatic fire detection and alarm systems
AS/NZS 1865	1997	Aluminium and aluminium alloys - Drawn wire, rod, bar and strip
AS/NZS 1866	1997	Aluminium and aluminium alloys - Extruded rod, bar, solid and hollow shapes
AS/NZS 1867	1997	Aluminium and aluminium alloys - Drawn tubes
AS/NZS 1873		Powder-actuated (PA) hand-held fastening tools
AS/NZS 1873.4	2003	Fasteners
AS 1882	2002	Earth and bonding clamps
AS/NZS 1892		Portable ladders
AS/NZS 1892.1	1996	Metal
AS 1897	1976	Electroplated coatings on threaded components (metric coarse series)
AS 1940	2004	The storage and handling of flammable and combustible liquids
AS/NZS 2032	2006	Installation of PVC pipe systems
AS 2047	1999	Windows in buildings - Selection and installation
AS 2050	2002	Installation of roof tiles
AS/NZS 2053		Conduits and fittings for electrical installations
AS/NZS 2053.1	2001	General requirements
AS/NZS 2053.2	2001	Rigid plain conduits and fittings of insulating material
AS/NZS 2053.3	1995	Rigid plain conduits and fittings of fibre-reinforced concrete material
AS/NZS 2053.4	1995	Flexible conduits and fittings of insulating material
AS/NZS 2053.5	2001	Corrugated conduits and fittings of insulating material
AS/NZS 2053.6	2001	Profile-wall, smooth-bore conduits and fittings of insulating material
AS/NZS 2053.7	2002	Rigid metal conduits and fittings
AS/NZS 2053.8	1995	Flexible conduits and fittings of metal or composite material
AS/NZS 2107	2000	Acoustics - Recommended design sound levels and reverberation times for building interiors
AS 2124	1992	General conditions of contract
AS 2125	1992	General conditions of tendering and form of tender
AS 2127	1992	Form of formal instrument of agreement
AS 2129	2000	Flanges for pipes, valves and fittings
AS 2184	1985	Low voltage switchgear and controlgear Moulded-case circuit breakers for rated voltages up to and including 600 V a.c. and 250 V d.c.
AS/NZS 2201		Intruder alarm systems
AS/NZS 2201.1	2007	Client's premises - Design, installation, commissioning and maintenance
AS 2201.2	2004	Monitoring centres
AS 2201.3	1991	Detection devices for internal use

AS 2201.4		
	1990	Wire-free systems installed in client's premises
AS/NZS 2201.5	2008	Alarm transmission systems
AS/NZS 2280	2004	Ductile iron pressure pipes and fittings
AS/NZS 2293		Emergency escape lighting and exit signs for buildings
AS 2293.1	2005	System design, installation and operation
AS/NZS 2293.2	1995	Inspection and maintenance
AS 2293.3	2005	Emergency escape luminaires and exit signs
AS/NZS 2311	2000	Guide to the painting of buildings
AS/NZS 2312	2002	Guide to the protection of structural steel against atmospheric corrosion by the use of protective coatings
AS 2325	1993	Tungsten filament lamps for general service - Performance requirements
AS 2329	1999	Mastic adhesives for fixing wallboards
AS 2334	1980	Steel nails - Metric series
AS 2436	1981	Guide to noise control on construction, maintenance and demolition sites
AS/NZS 2465	1999	Unified hexagon bolts, screws and nuts (UNC and UNF threads)
AS 2467	2008	Maintenance of electrical switchgear
AS/NZS 2544	1995	Grey iron pressure fittings
AS 2545	1993	Subcontract conditions
AS 2601	2001	The demolition of structures
AS 2638		Sluice valves for water works purposes
AS/NZS 2648.1	1995	Non-detectable tape
AS 2676		Guide to the installation, maintenance, testing and replacement of secondary batteries in buildings
AS 2676.1	1992	Vented cells
AS/NZS 2699		Built-in components for masonry construction
AS/NZS 2699.1	2000	Wall ties
AS/NZS 2699.2	2000	Connectors and accessories
AS/NZS 2699.3	2002	Lintels and shelf angles (durability requirements)
AS 2700	1996	Colour Standards for general purposes
AS/NZS 2728	2007	Prefinished/prepainted sheet metal products for interior/exterior building applications - Performance requirements
AS 2754		Adhesives for timber and timber products
AS 2754.2	1991	Polymer emulsion adhesives
AS 2754.3	1988	Adhesives for non-structural applications
AS/NZS 2865	2001	Safe working in a confined space
AS 2870	1996	Residential slabs and footings - Construction
AS/NZS 2891		Methods of sampling and testing asphalt
AS/NZS 2891.3.1	1997	Bitumen content and aggregate grading - Reflux method
AS/NZS 2891.3.3	1997	Bitumen content and aggregate grading - Pressure filter method
AS 2891.9.3	2005	Determination of bulk density of compacted asphalt - Mensuration method
AS 2891.10	2005	Water and volatile oils content
AS 2946	1991	Suspended ceilings, recessed luminaries and air diffusers - Interface requirements for physical compatibility
AS/NZS 3000	2007	Electrical installations (known as the Australian/New Zealand Wiring Rules)
AS/ANZ 3008		Electrical installations - Selection of cables
AS/ANZ 3008.1.1	1998	Cables for alternating voltages up to and including 0.6/1 kV - Typical Australian installation conditions
AS/NZS 3009	1998	Electrical installations - Emergency power supplies in hospitals
AS/NZS 3010	2005	Electrical installations - Generating sets
AS 3011	various	Electrical installations - Secondary batteries installed in buildings
AS/NZS 3013	2005	Electrical installations - Classification of the fire and mechanical performance of wiring system elements
AS/NZS 3017	2007	Electrical installations - Verification guidelines
AS/NZS 3080	2003	Telecommunications installations - Generic cabling for commercial premises (ISO/IEC 11801:2002, MOD)
AS/NZS 3084	2003	Telecommunications installations - Telecommunications pathways and spaces for commercial buildings
AS/NZS 3085		Telecommunications installations - Administration of communications cabling systems
AS/NZS 3085.1	1995	Basic requirements
AS/NZS 3100	2002	Approval and test specification - General requirements for electrical equipment
AS 3111	1994	Approval and test specification for miniature overcurrent circuit-breakers
AS/NZS 3112	2004	Approval and test specification - Plugs and socket-outlets
AS/NZS 3123	2005	Approval and test specification - Plugs, socket-outlets and couplers for general industrial application.
AS/NZS 3190	2002	Approval and test specification - Residual current devices (current-operated earth-leakage devices)
AS/NZS 3439		Low-voltage switchgear and controlgear assemblies
AS/NZS 3439.1	2002	Type-tested and partially type-tested assemblies
AS/NZS 3439.2	2002	Particular requirements for busbar trunking systems (busways)
AS/NZS 3439.3	2002	Particular requirements for low-voltage switchgear and controlgear assemblies intended to be installed in places where unskilled persons have access for their use - Distribution boards
AS 3566		Self-drilling screws for the building and construction industries
AS 3566.1	2002	General requirements and mechanical properties
AS 3566.2	2002	Corrosion resistance requirements

AS 3582		Supplementary cementitious materials for use with portland and blended cement
AS 3582.1	1998	Fly ash
AS 3583.1	1998	Determination of fineness by the 45 um sieve
AS 3583.2	1991	Determination of moisture content
AS 3583.12	1991	Determination of available alkali
AS 3583.13	1991	Determination of chloride ion content
AS 3583.14	1991	Determination of insoluble residue content
AS 3600	2001	Concrete structures
AS 3660		Termite management
AS 3660.1	2000	New building work
AS/NZS 3679		Structural steel
AS/NZS 3679.1	1996	Hot-rolled bars and sections
AS 3715	2002	Metal finishing - Thermoset powder coatings for architectural applications of aluminium and aluminium alloys
AS 3730		Guide to the properties of paints for buildings
AS 3730.6	2006	Solvent-borne - Interior/exterior - Full gloss enamel
AS 3730.15	2006	Primer - Latex - For metallic zinc surfaces
AS 3731		Stationary batteries-Nickel-cadmium
AS 3731.1	1995	Vented type
AS 3731.2	1995	Valve-regulated type
AS/NZS 3750		Paints for steel structures
AS/NZS 3750.9	1994	Organic zinc-rich primer
AS/NZS 3750.13	1997	Epoxy primer (two pack)
AS 3768	1990	Guide to the effects of temperature on electrical equipment
AS 3798	2007	Guidelines on earthworks for commercial and residential developments
AS 3865	1991	Calculation of the effects of short-circuit currents
AS/NZS 3947		Low-voltage switchgear and controlgear
AS/NZS 3947.3	2001	Switches, disconnectors, switch-disconnectors and fuse-combination units
AS/NZS 3947.4.3	2000	Contactors and motor-starters - A.C. semiconductor controllers and contactors for non-motor loads
AS/NZS 3947.5.5	2000	Control circuit devices and switching elements - Electrical emergency stop device with mechanical latching function
AS/NZS 3947.5.6	2000	Control circuit devices and switching elements - D.C.interface for proximity sensors and switching amplifiers (NAMUR)
AS/NZS 3947.6.1	2001	Multiple function equipment - Automatic transfer switching equipment
AS 3952	2002	Water supply - spring hydrant valve for waterworks purposes
AS 3972	1997	Portland and blended cements
AS 3996	2006	Access covers and grates
AS 4000	1997	General conditions of contract
AS 4025		Paints for equipment including ships
AS 4025.1	1992	Solvent-borne - Interior and exterior - Full gloss enamel
AS 4025.2	1993	Solvent-borne - Interior and exterior - Undercoat
AS 4025.4	1994	Solvent-borne - Lead and chromate free - Anticorrosive metal primer
AS/NZS 4026	2001	Electric cables - For underground residential distribution systems
AS/NZS 4029		Stationary batteries-Lead-acid
AS 4029		Stationary batteries - Lead-acid
AS 4029.1	1994	Vented type
AS/NZS 4029.2	2000	Valve-regulated sealed type
AS 4029.3	1993	Pure lead positive pasted plate type
AS 4044	1992	Battery chargers for stationary batteries
AS 4055	2006	Wind loads for housing
AS 4070	1992	Protection of low-voltage electrical installations and equipment in MEN systems from transient overvoltages
AS 4072		Components for the protection of openings in fire-resistant separating elements
AS 4072.1	2005	Service penetrations and control joints
AS 4100	1998	Steel structures
AS 4108	1993	Metal finishing - Glossary of terms used in electroplating and related processes
AS 4111	1993	Starters for fluorescent lamps - Performance requirements
AS 4120	1994	Code of Tendering
AS 4178	1994	Electromagnetic door holders
AS 4198	1994	Precast concrete chambers for sewerage applications
AS 4254	2002	Ductwork for air-handling systems in buildings
AS/NZS 4296	1995	Cable trunking systems
AS 4312	2008	Atmospheric corrosivity zones in Australia
AS/NZS 4383	various	Preparation of documents used in electro-technology
AS 4388	1996	A method of temperature-rise assessment by extrapolation for partially type-tested assemblies (PTTA) of low-voltage switchgear and controlgear
AS 4397	2007	Electroplated coatings of zinc on steel fasteners with imperial threads
AS/NZS 4402	1996	Hexagon head tapping screws
AS/NZS 4403	1996	Slotted pan head tapping screws
AS/NZS 4404	1996	Slotted countersunk (flat) head tapping screws (common head style)
AS/NZS 4405	1996	Slotted raised countersunk (oval) head tapping screws (common head style)
AS/NZS 4406	1996	Cross recessed pan head tapping screws
AS/NZS 4407	1996	Crossed recessed countersunk (flat) head tapping screws (common head style)
AS/NZS 4408	1996	Crossed recessed raised countersunk (oval) head tapping screws
AS/NZS 4409	1996	Hexagon washer head tapping screws

AS/NZS 4410	1996	Hexagon flange head tapping screws
AS 4428		Fire detection, warning, control and intercom systems - Control and indicating equipment
AS 4428.1	1998	Fire
AS 4428.3	2004	Fire brigade panel
AS 4428.4	2004	Intercommunication systems for emergency purposes
AS 4428.5	1998	Power supply units
AS 4428.6	1997	Alarm signalling equipment
AS 4428.7	1999	Air-handling fire mode control panel
AS 4428.9	2006	Requirements for wire-free alarm zone circuits
AS 4428.10	1998	Alarm investigation
AS/NZS 4506	1998	Metal finishing - Thermoset powder coatings
AS 4506	2005	Metal finishing - Thermoset powder coatings
AS/NZS 4534	1998	Zinc and zinc/aluminium-alloy coatings on steel wire
AS/NZS 4534	2006	Zinc and zinc/aluminium-alloy coatings on steel wire
AS 4594		Internal combustion engines - Performance
AS 4594.0	1999	Application
AS 4594.1	1999	Standard reference conditions, declarations of power, fuel and lubricating oil consumption and test methods
AS/NZS 4680	2006	Hot-dipped galvanized (zinc) coatings on fabricated ferrous articles
AS 4744		Steel shoring and trench lining
AS 4744.1	2000	Design
AS 4750	2003	Electrogalvanized (zinc) coatings on ferrous hollow and open sections
AS/NZS 4782		Double-capped fluorescent lamps - Performance specifications
AS/NZS 4782.1	2004	General (IEC 60081:2000, MOD)
AS/NZS 4782.2	2004	Minimum Energy Performance Standard (MEPS)
AS/NZS 4783		Performance of electrical lighting equipment - Ballasts for fluorescent lamps
AS/NZS 4783.1	2001	Method of measurement to determine energy consumption and performance of ballasts lamp circuits
AS/NZS 4783.2	2002	Energy labelling and minimum energy performance standards requirements
AS/NZS 4791	1999	Hot-dip galvanized (zinc) coatings on ferrous open sections, applied by an in-line process
AS/NZS 4792	1999	Hot-dip galvanized (zinc) coatings on ferrous hollow sections, applied by a continuous or a specialized process
AS 4806		Closed circuit television (CCTV)
AS 4806.2	2006	Application guidelines
AS 4806.4	2008	Remote video
AS/NZS 4859		Materials for the thermal insulation of buildings
AS/NZS 4859.1	2002	General criteria and technical provisions
AS 4874	2000	Guide to the investigation of potentially contaminated soil and deposited dust as source of lead available to humans
AS 4902	2000	General conditions of contract for design and construct
AS 4905	2002	Minor works contract conditions (Superintendent administered)
AS/NZS 4961	2003	Electric cables - Polymeric insulated - For distribution and service applications
AS 4964	2004	Method for qualitative identification of asbestos in bulk samples
AS/NZS 5000		Electric cables - Polymeric insulated
AS/NZS 5000.1	2005	For working voltages up to and including 0.6/1 kV (1.2) kV
AS 5047	2005	Hydraulic shoring and trench lining equipment
AS 7240		Fire detection and alarm systems
AS 7240.2	2004	Control and indicating equipment
AS 7240.5	2004	Point-type heat detectors
AS 7240.6	2006	Carbon monoxide fire detectors using electro-chemical cells
AS 7240.7	2004	Point-type smoke detectors using scattered light, transmitted light or ionization
AS 7240.13	2006	Compatibility assessment of system components
AS 7240.15	2004	Multisensor fire detectors
AS 7240.21	2006	Routing equipment
AS/NZS ISO 9000	2006	Quality management systems - Fundamentals and vocabulary
AS/NZS ISO 9001	2000	Quality management systems - Requirements
AS/NZS 9004		Quality management and quality system elements
AS/NZS 9004.5	1998	Guidelines for quality plans
AS/NZS ISO 10005	2006	Quality management systems - Guidelines for quality plans
AS ISO 10013	2003	Guidelines for quality management system documentation
AS 12239	2004	Fire detection and alarm systems - Smoke alarms (ISO 12239:2003, MOD)
AS/NZS ISO/IEC 15018	2005	Information technology - Generic cabling for homes
AS/NZS ISO 19011	2003	Guidelines for quality and/or environmental management systems auditing
AS/NZS ISO/IEC 24702	2007	Telecommunications installations - Generic cabling - Industrial premises
AS 60044		Instrument transformers (IEC 60044-1 Ed.1.2 (2003) MOD)
AS 60044.1	2007	Current transformers
AS 60146		Semiconductor converto
AS 60146.1.1	2002	General requirements and line commutated converters - Specifications of basic requirements
AS 60146.2	2001	Self-commutated semiconductor converters including direct d.c. converters
AS/NZS 60155	2000	Glow-starters for fluorescent lamps
AS 60269		Low voltage fuses
AS 60269.1	2005	General requirements

AS 60269.2.0	2005	Supplementary requirements for fuses for use by authorized persons (fuses mainly for industrial application)
AS 60269.2.1	2005	Supplementary requirements for fuses for use by authorized persons (fuses mainly for industrial application) - Sections I TO VI: Examples of types of standardised fuses
AS 60529	2004	Degrees of protection provided by enclosures (IP Code)
AS/NZS 60598		Luminaires
AS/NZS 60598.1	2003	General requirements and tests
AS/NZS 60598.2.1	1998	Particular requirements - Fixed general purpose luminaires
AS/NZS 60598.2.2	2001	Particular requirements - Recessed luminaires (IEC 60598-2-2:1996, MOD)
AS/NZS 60598.2.4	2005	Particular requirements - Portable general purpose luminaires
AS/NZS 60598.2.5	2002	Particular requirements - Floodlights
AS/NZS 60598.2.6	1998	Particular requirements - Luminaires with built-in transformers or convertors for filament lamps
AS/NZS 60598.2.18	1998	Particular requirements - Luminaires for swimming pools and similar applications
AS/NZS 60598.2.18	1998	Particular requirements - Luminaires for swimming pools and similar applications
AS/NZS 60598.2.19	2001	Particular requirements - Air handling luminaires (safety requirements) (IEC 60598.2.19:1981, MOD).
AS/NZS 60598.2.25	2001	Particular requirements - Lminaires for use in clinical areas of hospitals and health care buildings (IEC 60598.2.25:1994 MOD)
AS 60849	2004	Sound systems for emergency purposes
AS/NZS 60898		Electrical accessories - Circuit-breakers for overcurrent protection for household and similar installations
AS/NZS 60898.1	2004	Circuit-breakers for a.c. operation
AS/NZS 60901	2003	Single-capped fluorescent lamps - Performance specifications
AS/NZS 60921	2002	Ballasts for tubular fluorescent lamps - Performance requirements (IEC 60921:1988, MOD)
AS/NZS 60923	1998	Auxiliaries for lamps - Ballasts for discharge lamps (excluding tubular fluorescent lamps) - Performance requirements
AS/NZS 60929	2005	A.C. supplied electronic ballasts for tubular fluorescent lamps - Performance requirements
AS 60947		Low voltage switchgear and controlgear
AS 60947.1	2004	General rules
AS 60947.2	2005	Circuit-breakers
AS 60947.4.1	2004	Contactors and motor-starters - Electromechanical contactors and motor-starters
AS 60947.4.2	2004	Contactors and motor-starters - A.C. semiconductor motor controllers and starters
AS 60947.5.1	2004	Control circuit devices and switching elements - Electromechanical control circuit devices
AS 60947.5.2	2004	Control circuit devices and switching elements - Proximity switches
AS 60947.5.4	2004	Control circuit devices and switching elements - Methods of assessing the performance of low-energy contacts - Special tests
AS 60947.6.2	2004	Multiple function equipment - Control and protective switching devices (or equipment) (CPS)
AS 60947.8	2005	Control units for built-in thermal protection (PTC) for rotating electrical machines
AS/NZS 60968	2001	Self ballasted lamps for general lighting services - Safety requirements (IEC 60968:1988, MOD)
AS/NZS 60969	2001	Self ballasted lamps for general lighting services - Performance requirements
AS 61000		Electromagnetic compatibility (EMC)) - Limits
AS/NZS 61000.3.2	2007	Limits for harmonic current emissions (equipment input current (16 A per phase) (IEC 61000-3-2, Ed. 3.0 (2005) MOD)
AS/NZS 61008		Residual current operated circuit-breakers without integral overcurrent protection for household and similar uses (rccbs)
AS/NZS 61008.1	2004	General rules
AS/NZS 61009		Residual current operated circuit-breakers with integral overcurrent protection for household and similar uses (rcbos)
AS/NZS 61009.1	2004	General rules
AS/NZS 61048	2002	Auxiliaries for lamps - Capacitators for use in tubular fluorescent and other discharge lamp circuits - General safety requirements
AS/NZS 61049	2002	Auxiliaries for lamps - Capacitators for use in tubular fluorescent and other discharge lamp circuits - Performance requirements
AS/NZS 61347		Lamp controlgear
AS/NZS 61347.1	2002	General and safety requirements (IEC 61347-1:2000, MOD)
AS/NZS 61347.2.2	2007	Particular requirements for d.c. or a.c. supplied electronic step-down convertors for filament lamps (IEC 61347-2-2, Ed. 1.2 (2006) MOD)
AS/NZS 61347.2.3	2004	Particular requirements for a.c. supplied electronic ballasts for fluorescent lamps
AS/NZS 61347.2.8	2003	Particular requirements for ballasts for fluorescent lamps
AS/NZS 61558		Safety of power transformers, power supply units and similar
AS/NZS 61558.1	2000	General requirements and tests. (IEC 61558-1:1997, MOD)
AS/NZS IEC 61935		Testing of balanced communication cabling in accordance with ISO/IEC 11801
AS/NZS IEC 61935.1	2006	Installed cabling
AS/NZS IEC 61935.2	2006	Patch cords and work area cords
AS/NZS 62026		Low-voltage switchgear - Controller-device interfaces (CDI's)
AS/NZS 62026.1	2001	General rules
AS/NZS 62026.2	2001	Actuator sensor interface
AS/NZS 62026.3	2001	DeviceNet
AS/NZS 62026.5	2001	Smart distributed system (SDS)

AS 62040		Uninterruptible power systems
AS 62040.2	2001	Electromagnetic compatibility (EMC) requirements
AS 62040.3	2002	Method of specifying the performance and test requirements
AS/ACIF S008	2001	Requirements for authorised cabling products
AS/NZS 3718	1993	Water supply - Tap ware - Tank containers
CB 024	2001	The quality systems handbook
SAA HB 12	1996	Metals index
SAA HB 17	1996	Metals and alloys - Standard terminology and nomenclature
SAA HB 29	2007	Communications cabling manual - Module 2: Communications cabling handbook
SAA HB 31	2002	Handbook for building construction tolerances - Extract from building products and structures Standards
SAA HB 40		The Australian Refrigeration and Air Conditioning Code of Good Practice
SAA HB 40.1	2001	Reduction of emissions of fluorocarbon refrigerants in commercial and industrial refrigeration and airconditioning applications
SAA HB 40.2	2001	Reduction of emissions of fluorocarbons in residential airconditioning applications
SAA HB 57	1994	User's manual for lump sum contract based on AS 2124-1992
SAA HB 90		Quality for the Construction Industry
SAA HB 90.3	2000	Guide to ISO 9001:2000
SAA HB 140	2000	Administration manual for AS 4000-1997 General conditions of contract
SAA HB 155	2002	Guide to the use of recycled concrete and masonry materials
SAA HB 160	2006	Soils testing
SAA HB 243	2007	Communications cabling manual - Module 1: Australian regulatory arrangements
SAA HB 252	2007	Communications Cabling Manual - Module 3: Residential communications cabling handbook
SAA HB 300	2001	Electrical installations - guide to using the Wiring Rules
SAA HB 301	2001	Electrical installations - Designing to the Wiring Rules
SAA MP 52	2005	Manual of authorization procedures for plumbing and drainage products
ABIC EW-1	2003	Australian Building Industry Contract - Early Works Contract
ABIC MW-1	2003	Australian Building Industry Contract – Major works
ABIC SW-1	2003	Australian Building Industry Contract – Simple works
ACIF C524	2004	Industry Code - External Telecommunication Cable Networks
APCC	1999	National Code of Practice for the Construction Industry Towards best practice - Guidelines
APCC	2005	Implenentation Guidelines for the National Code of Practice for the Construction Industry
ASCC	2006	Guidance on the principles of safe design for work
ASMM	1991	Australian standard method of measurement of building works
BCA A2.2		General provisions - Acceptance of design and construction - Evidence of suitability
BCA Spec A2.4		General provisions - Acceptance of design and construction - Fire hazard properties
BCA C1.10		Fire resistance - Fire resistance and stability - Fire hazard properties
BCA C3.15(a)	2005	Fire resistance - Protection of openings - Openings for service installations
BCA C3.15		Fire resistance - Protection of openings - Openings for service installations
BCA Spec C3.15		Fire resistance - Protection of openings - Penetration of walls, floors and ceilings by services
BCA C3.15(b)		Fire resistance - Protection of openings - Openings for service installations
BCA C3.15(e)		Fire resistance - Protection of openings - Openings for service installations
BCA C3.15(d)		Fire resistance - Protection of openings - Openings for service installations
BCA C3.16		Fire resistance - Protection of openings - Construction joints
BCA E1.5		Services and Equipment - Fire fighting equipment - Sprinklers
BCA F5.2		Health and amenity - Sound insulation for building elements - Determination of airborne sound insulation ratings
BCA Spec F5.2		Health and amenity - sound transmission and insulation - Sound insulation for building elements
BCA F5.6		Health and amenity - Sound transmission and insulation - Sound insulation rating of services
BCA J8		Access for maintenance
BEDP EDG DES5	2006	Sustainable design - a client briefing
BEDP EDG DES56	2003	Birds and buildings
BEDP EDG PRO5	2001	A survey of chemical risks in the built environment
BEDP EDG PRO6	2001	Reducing chemical risks in the built environment
BEDP EDG PRO20	1998	Lead hazards in construction - a designer's guide
CFMEU	2001	Asbestos kills
CIDA 17	1995	The Australian Construction Industry - Pre-Qualification Criteria for Smaller Projects
CIDA 18	1995	The Australian Construction Industry - Pre-Qualification Criteria for Contractors
CIDA 19	1995	The Australian Construction Industry - Pre-Qualification Criteria for Subcontractors
CSIRO CMSE	2003	Activfire register of fire protection equipment
BEDP EDG NOT11	2006	Ecologically sustainable development - glossary of ESD terms
ICAC	1993	Pitfalls or probity: tendering & purchasing case studies
JAS-ANZ		Joint Accreditation System od Australia and New Zealand
NATSPEC TECHreport	2007	Specifying ESD
NTN GEN 003	2006	Using NATSPEC to specify BMS, Building IT and controls
NTN PRO 001	2005	CCA (Copper chrome arsenate) treated timberfmasrewrspec
NTN PRO 005	2006	Selection of sealants
NOHSC	1989	Electroplating
NOHSC 1004	1990	National Standard for Synthetic Mineral Fibres

NOHSC 1016	2005	National Standard for Construction Work
NOHSC 2002	2005	Asbestos Code of Practice for the Safe Removal of Asbestos
NOHSC 2006	1990	National Code of Practice for the Safe Use of Synthetic Mineral Fibres
SAA HB 42	1992	General conditions of contract (AS 2124-1992) - User guide
RAIA AN02.01.100	2005	Document retention
RAIA AN02.01.301	1999	Guide to the conduct of meetings
RAIA AN02.01.302	1999	Meetings in architectural practice
RAIA AN02.01.302	2006	Meetings in architectural practice and management
RAIA AN10.01.101	1993	Scope of the architect's services
RAIA AN10.01.601	2006	Don't 'include by reference'
RAIA AN10.01.608	2003	Disclaimers of fitness for purpose of building materials
RAIA AN10.05.100	1999	Negotiating contracts
RAIA AN10.05.102	2006	Methods of procuring buildings
RAIA AN10.05.104	2006	Design and construct contracts
RAIA AN11.01.100	2005	The importance of written records
RAIA AN11.01.101	2004	Keeping project records
RAIA AN13.01.101	2003	Survey information
RAIA AN13.01.103	2005	Occupational health and safety: safe design
RAIA AN13.01.604	2006	Can your design be built safely?
RAIA AN13.01.606	2007	Designers' obligations under Section 30B of the Workplace Health and safety Act (Queensland)
RAIA AN13.02.100	2005	Obligations regarding statutory approvals
RAIA AN13.02.101	2004	Certificates of title explained
RAIA AN13.04.105	2003	Issues in office fitout projects
RAIA AN14.01.102	2006	Occupational health and safety legislation
RAIA AN14.01.103	2006	Occupational health and safety - an overview
RAIA AN14.01.104	2006	Designing safer buildings in Victoria - Occupational Health and Safety Act Section 28
RAIA AN14.01.902	2004	Asbestos in buildings and structures.
RAIA AN14.02.100	1993	Warranties and guarantees
RAIA AN14.02.400	1979	Some notes on liability for manufactured products
RAIA AN14.02.600	2001	Beware of wording of warranties
RAIA AN14.03.101	1999	Tender/contract documents - overview
RAIA AN14.03.102	1999	Notice to tenderers and conditions of tendering
RAIA AN14.03.103	2004	Specification prelminaries
RAIA AN14.03.700	2006	Specifying for sustainability
RAIA AN15.01.101	2006	The components of a building contract
RAIA AN15.01.102	2004	Preparing contract documents
RAIA AN15.01.104	1995	Deeds and simple contracts - What they are and how they are executed?
RAIA AN15.01.600	2000	Do you amend standard form contracts?
RAIA AN15.01.603	2000	Incorporation of government policy
RAIA AN15.08.100	2007	Contract conditions - advice to tenderers
RAIA AN15.08.101	2007	Calling, receiving and negotiating tenders
RAIA AN15.08.102	2007	Tender/contract documents - an overview
RAIA AN15.08.103	2007	Criteria for selecting tenderers or contractors
RAIA AN15.08.104	2007	Checklist of tender information and conditions of tendering
RAIA AN15.08.105	2007	Preparing the notice to tenderers and conditions of tendering
RAIA AN15.08.401	2003	Beware of recommending builders and tradespeople
RAIA AN15.08.601	2003	Qualified or non-conforming tenders
RAIA AN15.20.100	2003	ABIC MW-1 2003 major works contract user guide
RAIA AN15.20.100	2007	ABIC MW-2007 major works contract - MW-2007 joint user guide
RAIA AN15.30.100	2002	ABIC SW-1 2002 simple works contract - user guide
RAIA AN15.50.100	2003	ABIC EW-1 2003 Early works contract
RAIA AN16.01.100	2005	Managing shop drawings
RAIA AN16.01.101	2005	Employing a clerk of works
RAIA AN16.01.605	2007	Architects do not supervise building work
RAIA AN16.01.700	2000	Site inspection
RAIA AN16.05.101	2002	The contingency sum
RAIA AN16.06.102	2004	The role of the architect in expediting the works
RAIA AN16.09.401	2003	Noise from building sites
RAIA AN16.10.100	2005	'Separate contractors' and 'particular persons'
RAIA AN16.10.600	2000	Don't engage nominated subcontractors or order prime cost items
RAIA AN18.01.401	2003	Adverse possession - ensuring the building is on the right site
RTA Test Method T432	2001	Rate of slaking of quickime
SUSDP	2006	Standard for the Uniform Scheduling of Drugs and Poisons No. 21 Appendix P - Uniform Paint Standard
SUSDP	2007	Standard for the Uniform Scheduling of Drugs and Poisons No. 22 Appendix I - Uniform Paint Standard
WP 001	2005	A guide to AS/NZS 1170.2 - Wind actions
WTIA TN11	1998	Commentary on the Structural Steel Welding - Standard AS/NZS 1554
BRANZ Bulletin 441	2003	Sealed joints in external claddings - 2: Sealants
AAMA 2604	2005	Voluntary specification, performance requirements and test procedures for high performance organic coatings on aluminium extrusions and panels
AAMA 2605	2005	Voluntary specification, performance requirements and test procedures for superior performing organic coatings on aluminum extrusions and panels
AQMD Rule 1168	1989	Adhesive and sealant applications. Rule 1168

ASTM A240/A240M	2006	Standard Specification for Chromium and Chromium-Nickel Stainless Steel Plate, Sheet, and Strip for Pressure Vessels and for General Applications
ASTM A240/A240M	2007	Standard specification for chromium and chromium-nickel stainless steel plate, sheet, and strip for pressure vessels and for general application
ASTM A276	2003	Standard Specification for Stainless Steel Bars and Shapes
ASTM A554	2003	Standard Specification for Welded Stainless Steel Mechanical Tubing
ASTM D523	1999	Standard Test Method for Specular Gloss
ASTM D968	2005	Standard Test Methods for Abrasion Resistance of Organic Coatings by Falling Abrasive
ASTM D1308	2007	Standard Test Method for Effect of Household Chemicals on Clear and Pigmented Organic finishes
ASTM D1400	2000	Standard Test Method for Nondestructive Measurement of Dry Film Thickness of Nonconductive Coatings Applied to a Nonferrous Metal Base
ASTM D2197	2004	Standard Test Method for Adhesion of Organic Coatings by Scrape Adhesion
ASTM D2244	2007	Standard Practice for Calculation of Color Tolerances and Color Differences from Instrumentally Measured Color Coordinates
ASTM D2248	2007	Standard Practice for Detergent Resistance of Organic Finishes
ASTM D3363	2005	Standard Test Method for Film Hardness by Pencil Test
ASTM D4060	2007	Standard Test Method for Abrasion Resistance of Organic Coatings by the Taber Abraser
ASTM D4214	2007	Standard Test Methods for Evaluating the Degree of Chalking of Exterior Paint Films
ASTM E814	2002	Standard Test Method for Fire Tests of Through-Penetration Fire Stops
ASTM E814	2006	Standard Test Method for Fire Tests of Through-Penetration Fire Stops
UL 1479	2003	Standard for safety for fire tests of through-penetration firestops
IEC 60034		Rotating electrical machines
IEC 60034-5	2006	Degree of protection provided by the integral design of rotating electrical machines (IP Code) – Classification.
IEC 60034-12	2007	Starting performance of single-speed three-phase cage induction motors
IEC 60085	2007	Electrical insulation - Thermal evaluation and designation
IEC 60169		Radio-frequency connectors
IEC 60169-2	1965	Coaxial unmatched connector
IEC 60169-24	1991	Radio-frequency coaxial connectors with screw coupling, typically for use in 75 ohm cable distribution systems (Type F)
IEC 60188	2001	High-pressure mercury vapour lamps - performance specifications
IEC 60192	2001	Low-Pressure sodium vapour lamps - performance specifications
IEC 60357	2002	Tungsten halogen lamps (non-vehicle)
IEC 60662	2002	High-pressure sodium vapour lamps
IEC 60793-2		Optical fibres
IEC 60793-2-10	2007	Product specifications - Sectional specification for category A1 multimode fibres
IEC 60794		Optical fibre cables
IEC 60794-1-2	2003	Generic specification - Basic optical cable test procedures
IEC 60831		Shunt capacitors for a.c. power systems having a rated voltage above 1000 V
IEC 60831-1	2002	General
IEC 60831-2	1995	Endurance testing
IEC 60893		Specification for industrial rigid laminated sheets based on thermosetting resins for electrical purposes
IEC 60893-1	2004	Definitions, designations and general requirements
IEC 60947		Low voltage switchgear and controlgear
IEC 60947-5.5	2005	Control circuit devices and switching elements - Electrical emergency stop device with mechanical latching function
ISO 2063	2005	Thermal spraying -- Metallic and other inorganic coatings -- Zinc, aluminium and their alloys
ISO 8501		Preparation of steel substrates before application of paints and related products - Visual assessment of surface cleanliness
ISO 8501-1	2007	Rust grades and preparation grades of uncoated steel substrates and of steel substrates after overall removal of previous coatings
ISO 11600	2002	Building construction - Jointing products - Classification and requirements for sealants

CORPORATE INFORMATION

NATSPEC is the trading name of Construction Information Systems Limited, ABN 20 117 574 606.

NATSPEC, founded in 1975, is a not-for-profit organisation that is owned by the design, build, construct and property industry through the shareholdings of professional associations and government property groups. It is impartial and is not involved in advocacy or policy development. NATSPEC's major service is the comprehensive national specification system endorsed by government and professional bodies. The specification is for all building structures with specialist packages for architects, interior designers, landscape architects, structural engineers, service engineers and domestic owners.

NATSPEC's aims are to provide economies of scale for its shareholders and to improve the quality of construction in Australia via the provision of information, tools, products and services.

STAKEHOLDERS

// Air Conditioning and Mechanical Contractors' Association of Australia

// Association of Consulting Engineers Australia

// Australian Council of Built Environment Design Professions

// Australian Elevator Association

// Australian Institute of Building

// Australian Institute of Building Surveyors

// Australian Institute of Quantity Surveyors

// Building Commission Victoria

// Construction Industry Engineering Services Group

// Department for Transport, Energy and Infrastructure (SA)

// Department of Finance and Administration

// Department of Housing and Works (WA)

// Department of Public Works (QLD)

// Department of Treasury (ACT)

// Department of Treasury and Finance (TAS)

// Engineers Australia

// Master Builders Australia

// NSW Department of Commerce

// NT Department of Planning and Infrastructure

// Royal Australian Institute of Architects

// Standards Australia

CONTACT INFORMATION

NATSPEC//

PHONE	1300 797 142
FAX	1300 797 143
EMAIL	mail@natspec.com.au
WEB	www.natspec.com.au

NATSPEC//

1958 – 1966
Secondary Facilities only

STYLE: Wyndham

CONSTRUCTION:

- Single and double storey
- Double loaded corridor
- Cavity brick construction with brick end walls
- Aluminium windows with aluminium ply inserts below 1000mm
- Sun shading- Reinforced concrete sun hoods or metal sun hoods
- Ventilating roof lights
- No insulation
- Concrete tile roofs or metal roofs

STRUCTURE:

- Ground floor - Timber frame
- First floor – reinforced concrete slab
- Timber and steel frame construction

1950 – 1960
Primary & Secondary Facilities

STYLE: Monocrete

CONSTRUCTION:
- Masonry
- Single and double storey
- Double hung timber windows with overhanging edge beams
- Concrete pre cast panel walls and brick end walls
- Concrete tile roof

STRUCTURE:
- External concrete columns with edge beams
- Ground floor - Timber frame
- First floor - concrete slab on precast concrete floor beams
- Timber or steel frame roof

1989 – Current
Primary Facilities only

STYLE: Component Design Range (CDR)

CONSTRUCTION:

- Mostly single storey
- Brick veneer or cavity brick construction
- Aluminium windows
- Translucent roof sheeting strips in home bases + library
- Insulation to walls behind metal cladding
- Mostly raked ceilings
- Corrugated metal roof
- Turbo Roof ventilators on upper storey

STRUCTURE:

- Reinforced concrete slab on ground
- Timber and steel frame construction

1969 – 1979
Secondary Facilities only

STYLE: Study 2/2A

CONSTRUCTION:
- Cavity brick external walls
- Double loaded corridor blocks with central high light windows
- Recessed windows with concrete sun hoods
- Aluminium sliding windows with hoppers
- Insulation under metal deck roof
- Skylight type roof structure with box gutter

STRUCTURE:
- Reinforced concrete slab on ground construction
- Concrete frame brick infills and end walls
- Brick internal walls

1965 – 1979
Primary Facilities only

STYLE: ***Vandersteen Transition***

CONSTRUCTION:

- Brick veneer construction
- Aluminium windows- full panel with aluminium ply below
- Mineral wool insulation to internal walls
- Sprayed concrete ceiling to ground floor
- Plasterboard ceiling lining to first floor
- Possible mineral wool insulation to ceilings
- Horizontal concrete sun hood
- Concrete tile roof

STRUCTURE:

- Slab on ground construction
- Concrete frame structure
- Brick end walls
- Reinforced concrete balustrade to verandahs
- Timber roof trusses

1969 – 1981
Primary Facilities only

STYLE: Cluster

CONSTRUCTION:
- Cavity brick construction
- Aluminium windows with aluminium infill panels
- Vertical high level louvres above windows
- Reinforced concrete sun hoods
- Concrete balustrades to verandahs
- Wide overhanging eaves
- Central roof light/ open court
- Concrete tile or metal roof

STRUCTURE:
- Concrete slab on ground construction
- Load bearing masonry
- Timber frame roof

1950 – 1965
Primary Facilities only

STYLE: Vandersteen

CONSTRUCTION:
- Mostly single storey
- Brick veneer construction
- Timber framed windows
- Windows with small lower hopper, higher level awning hopper style
- Tile roof

STRUCTURE:
- Brick veneer external walls
- Raised timber flooring
- Timber roof trusses

1993 – 1999
Primary Facilities only

STYLE: Rabong Kits

CONSTRUCTION:
- Brick veneer construction
- Aluminium windows
- Large eaves overhang
- Raked ceiling linings
- Insulation above ceiling linings to under side of roof
- Metal or tile roofing

STRUCTURE:
- Reinforced concrete slab on ground construction
- Timber framed construction

1968 – 1973
Primary Facilities only

STYLE: K- Plan

CONSTRUCTION:
- Single storey
- Cavity brick or brick veneer construction
- Aluminium framed double hung windows with infill panels beneath
- Ceiling lining
- Western red cedar fascias
- Typically low pitched metal deck roof
- Insulation under metal deck roof

STRUCTURE:
- Reinforced concrete slab on ground construction
- Load bearing masonry construction
- Generally steel framed roof

1905 – 1920
Primary and Secondary Facilities

STYLE: Double brick

CONSTRUCTION:

- Mainly brick and tile construction
- Some second storey light weight timber construction
- Multi-paned double hung timber windows
- Flat ceiling linings - with roof cavity

STRUCTURE:

- Load bearing masonry walls
- Ground floor – timber framing
- First floor - Reinforced concrete slab
- Timber roof framing

1915 – 1940
Primary and Secondary Facilities

STYLE: Timber portable

CONSTRUCTION:

- Older timber buildings
    - with vertical boards (no overlap of timber)
    - horizontal boards with overlap
- Verandah
- Corrugated iron roof and possibly unlined ceilings

STRUCTURE:

- Timber frame

1962 – 1975
Secondary Facilities

STYLE: Doughnut

CONSTRUCTION:

- Built around courtyard
- Reinforced concrete pre cast wall panels
- Cavity brick infill
- High level glass louvres above 2100mm to internal walkways
- Vertical louvres to east + west facades
- Concrete sun hoods
- Copper fascia
- Metal deck roof sloping into courtyard

STRUCTURE:

- Reinforced concrete slab on ground construction
- Timber framed roof

1968 – 1981
Secondary Facilities only

STYLE: Lib Lab Block

CONSTRUCTION:

- Library first floor, Science laboratory on ground floor
- Cavity brick external walls
- Recessed windows
- Aluminium sliding windows with hopper
- Insulation under metal deck roof
- Exhaust fans fitted to skylight area
- Skylight type roof structure with box gutter

STRUCTURE:

- Reinforced concrete slab on ground construction
- Reinforced concrete frame with brick infills
- Brick internal walls

NOTES:

1. INSTALLATION TO COMPLY WITH AS4777, AS5033:2005 AND AS3000
2. NUMBER OF MODULES IN SERIES AND NUMBER OF PARALLEL STRINGS TO BE NOMINATED BY THE TENDERER
3. NEUTRAL CONNECTIONS NOT SHOWN FOR CLARITY
4. CIRCUIT BREAKER / ISOLATOR RATINGS TO MATCH PV SYSTEM LOAD
5. CIRCUIT BREAKER / ISOLATOR FAULT CURRENT RATING TO MATCH EXISTING DISTRIBUTION BOARD FAULT CURRENT RATING

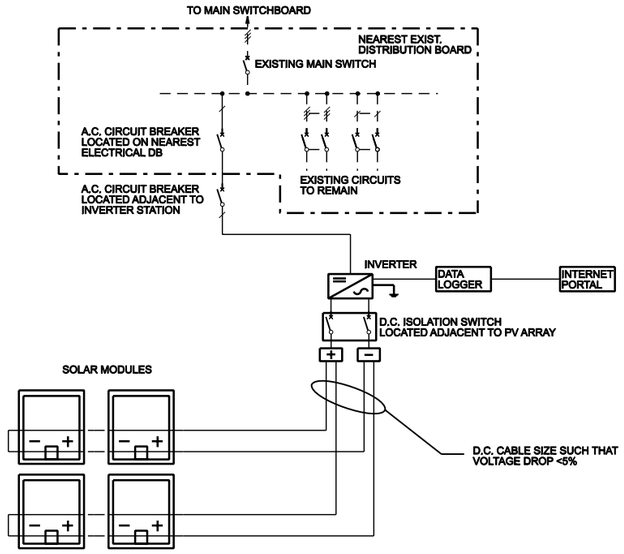

TYPICAL SINGLE PHASE DC / INVERTER / AC SCHEMATIC FOR PV SYSTEMS < 6 kWp NOMINAL CAPACITY

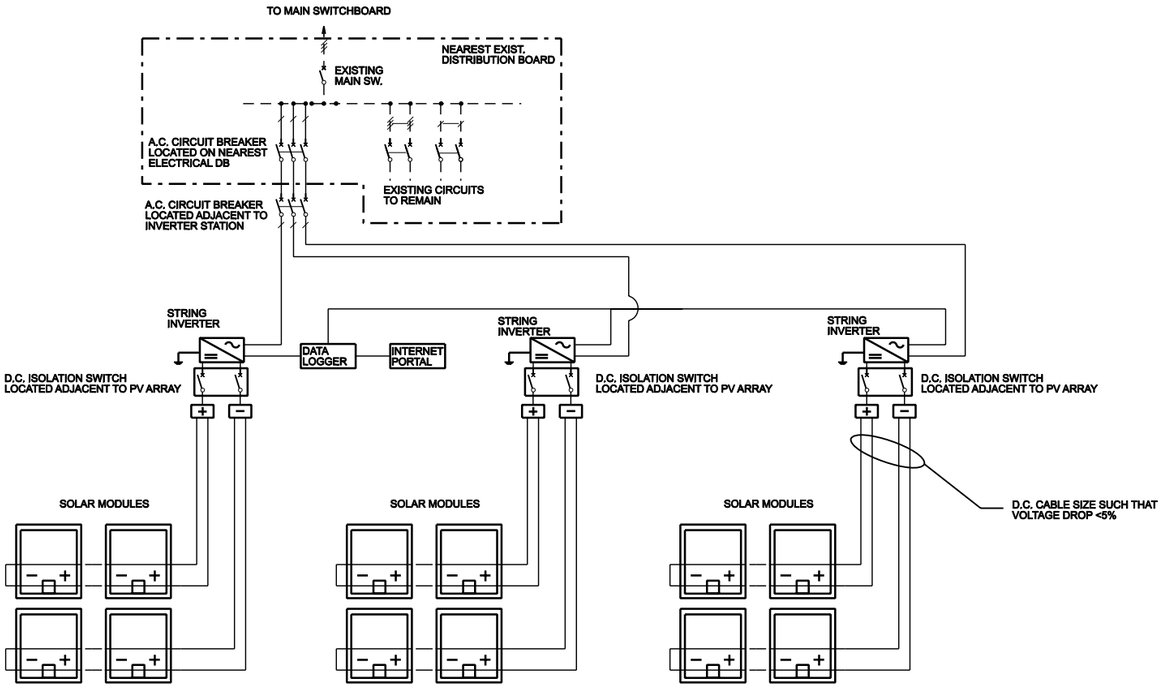

TYPICAL 3-PHASE DC / INVERTER / AC SCHEMATIC FOR PV SYSTEMS ≥ 6 kWp NOMINAL CAPACITY

KEY:

CIRCUIT BREAKER

ISOLATOR

NOTES:

REVISION		
ISS	DATE	COMMENT

ELECTRICAL, GOVERNMENT ARCHITECT'S OFFICE T 9372 8111 F 9372 8144

PRINCIPAL ENGINEER GOVERNMENT ARCHITECT'S OFFICE

NSW Department of Commerce

JOHN LEE
Director - General

Government Architect's Office

PETER MOULD
NSW Government Architect
Registration No. 3301
Level 18, McKell Building
2-24 Rawson Place
Sydney NSW 2000
AUSTRALIA

DET SOLAR PV CONTRACT

TYPICAL SCHEMATIC DC / INVERTER / AC

PLAN RM NO	CONTRACT NUMBER
SCALES: NTS	SHEET NO: E01
DESIGNED: C.Wilson / PLOT DATE: 24/09/2008	REVISION: A
DRAFTED: nikki h. / VERIFIED: B.Sharah	

A1 USE FIGURED DIMENSIONS IN PREFERENCE TO SCALING CHECK ALL DIMENSIONS ON SITE 200MM 300MM ON ORIGINAL

© CROWN COPYRIGHT NSW MINISTER FOR COMMERCE

Wilson/C5 $:\ODE$

www.det.nsw.edu.au

2008 DET Directory

NSW Department of Education and Training

08

NEW SOUTH WALES
DEPARTMENT
OF EDUCATION
AND TRAINING

HOW TO USE THIS PDF DOCUMENT

- To go to the first page of a section or subsection, click the section or subsection you want on the Contents page.

- To return to the Contents page from any other page, type the number 3 in the page number panel and press “Return”.

- To print an individual page or several consecutive pages, select in the print menu the page(s) you want before you press “Print”. (If you do not select a specific page or pages, you will print the entire Directory).

If you have any queries about printing from this Directory, please email directory@det.nsw.edu.au or ring 02 9561 1016.

Contents

Map of Regional Office Locations 2
Map of TAFE NSW Institutes 3
Foreword 4

STATE OFFICES/DIRECTORATES
State Offices 5
Senior Management 6
State Office Directorates and Units 7

REGIONAL OFFICES AND SCHOOL EDUCATION GROUPS (SEGs)
Regional Offices and SEGs 11
SEGs – Offices and Schools 12

TAFE NSW
TAFE NSW Institutes and Campuses 32
TAFE NSW Curriculum Centres 38

RELATED EXTERNAL ORGANISATIONS
Related Organisations 39
Zoos, Museums and Other Educational Centres 40
Sport and Recreation Centres 42

SCHOOL SECTIONS
Distance Education Schools and Centres 43
Environmental Education Centres 44
Multi-campus Colleges 44
Parents as Teachers Program 45
Public Schools with Preschools 46
Saturday School of Community Languages 47
Schools as Community Centres 48
Secondary Intensive English Centres 50
Specialist Secondary Schools 51
State Training Centres 52
Trade Skills Recognition 53
Trade Schools 54
Priority Schools Programs 55
Country Areas Program 58
Schools Attracting Incentive Benefits 59
Teacher Housing 60

SCHOOL ENROLMENTS/OPENINGS & CLOSURES
Public School Enrolments August 2007 62
Central School Enrolments August 2007 70
Community School Enrolments August 2007 70
High School Enrolments August 2007 71
Schools for Specific Purposes Enrolments August 2007 74
Statistics of Government Schools 74
Enrolments in NSW Government Schools 1988 – 2007 75
School Openings and Closures 2007-2008 75
Changes of School Names and Status 75

TERM DATES/CALENDARS
School Term Dates and Vacations 2008 – 2010 76
TAFE NSW Student Calendar 2008 – 2009 77

LIST OF SCHOOLS
How schools are classified 78
Guide to the Alphabetical List of Schools 79
Alphabetical List of Schools 80
Correction Page 193

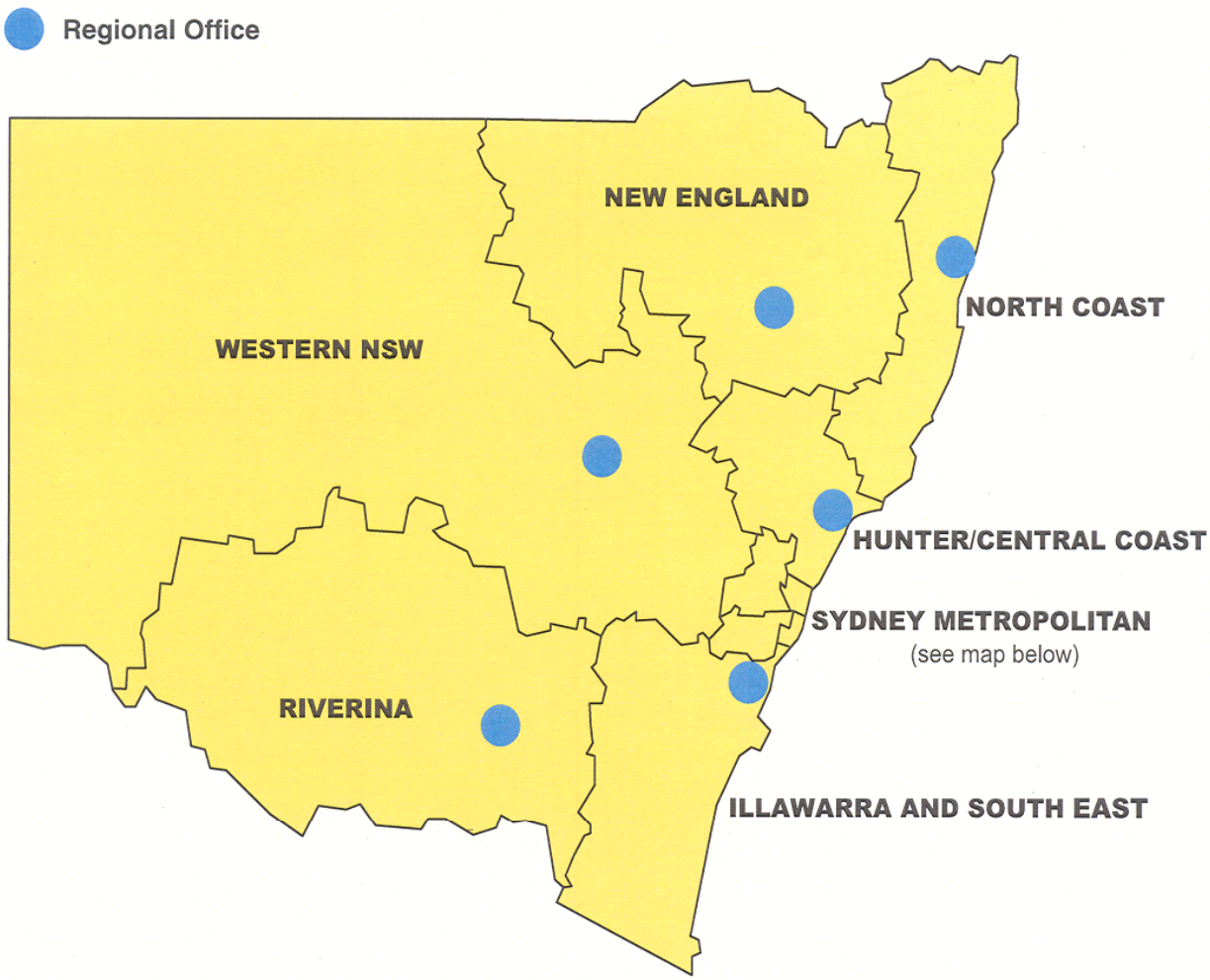

SYDNEY METROPOLITAN

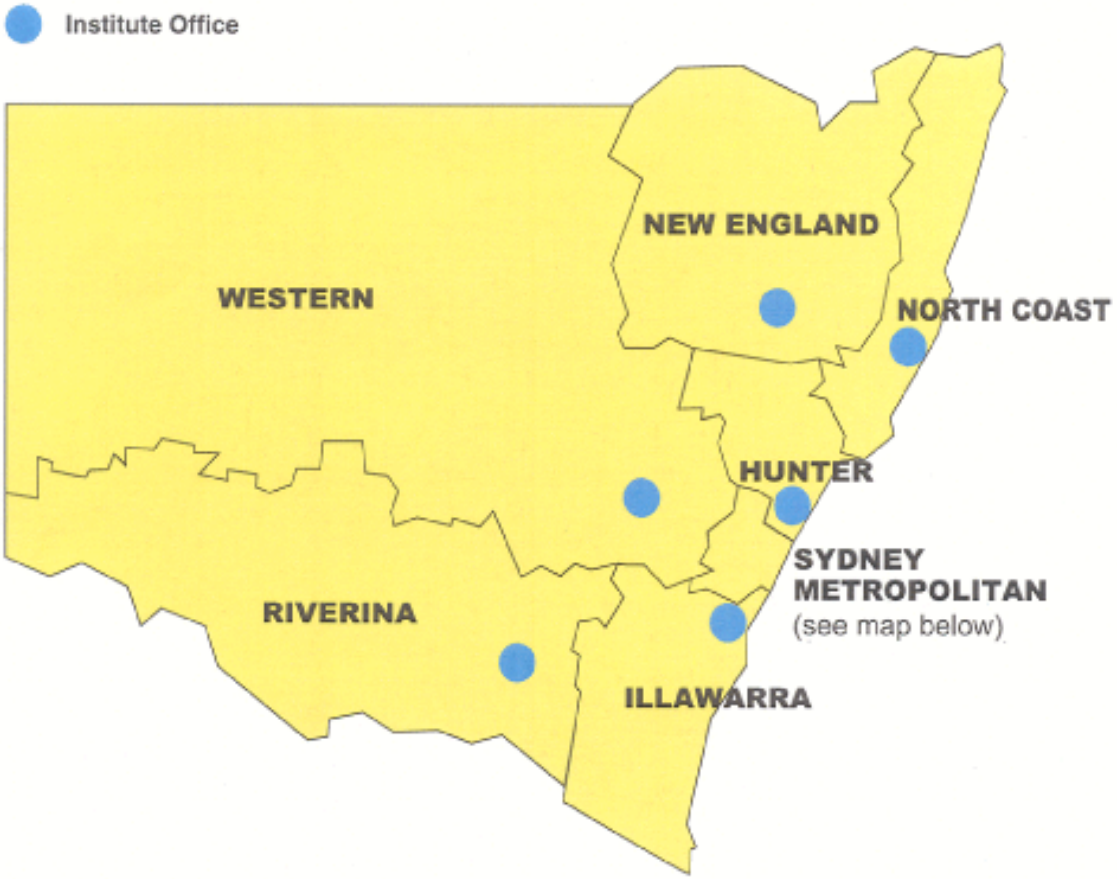

SYDNEY METROPOLITAN

The directory is an annual publication which provides information about the NSW Department of Education and Training. The information in the directory is up-to-date as at March 2008.

The Internet/Intranet

The home page of the NSW Department of Education and Training can be found at http://www.det.nsw.edu.au. From here information on schools can be accessed through the Public Schools NSW link. Information on TAFE NSW institutes can be accessed through the TAFE NSW link.

Listing of School Names

To make it easier to find particular schools in the main alphabetical list, standard listing conventions are used.

Wherever possible, schools with a community name are listed together. The following rules apply:

Schools whose names begin with **The** are listed under the main name: The Channon is listed as **Channon, The** and **The Entrance Public School** is listed as **Entrance Public School, The.**

Schools whose names include north, east, south or west are generally listed by the main locality: **North Auburn Public School** is listed as **Auburn North Public School** and **South Cardiff Public School** is listed as **Cardiff South Public School**. There are exceptions, such as **North Sydney Public School, South West Rocks Public School** and **East Hills Public School**.

Corrections and Suggestions

Tell us about errors and omissions so that we do not repeat them in subsequent editions of the directory. There is a corrections page at the end of the directory. Please fill out and return as directed.

Please tell us about other information that could be included in future editions. Again, use the corrections page at the end of this directory.

Any inquiries about the directory can be made to the Schools Data Officer, Data Collections Unit, Planning and Innovation Directorate, NSW Department of Education and Training, GPO Box 33, Sydney 2001.

Corporate Marketing Directorate
Ph 02 9561 8041
Fax 02 9561 8213

March 2008

NSW Department of Education and Training

GPO Box 33, Sydney NSW 2001
Internet: www.det.nsw.edu.au
Intranet: http://detwww.det.nsw.edu.au (only accessible on the DET network)
General Enquiries: Ph 02 9561 8000

State Offices

Bankstown

Educational Measurement and School Accountability
Level 9 Civic Tower
66-72 Rickard Road
Bankstown 2200
Ph 02 9707 6217

Bathurst

140 William Street, Bathurst 2795
Ph 02 6334 8100

Blacktown

22 Main Street, Blacktown 2148
Ph 02 9836 9000

Darlinghurst – Oxford Street

1 Oxford Street, Darlinghurst 2010
Ph 02 9244 5000 or 02 9266 8111

Newcastle

Level 1, 117 Bull Street
Newcastle West 2302
Ph 02 4924 9900

Ryde

3a Smalls Road, Ryde 2112
Ph 02 9886 7444

Sydney – Bridge Street

35 Bridge Street, Sydney 2000
(GPO Box 33, Sydney 2001)
Ph 02 9561 8000

Wollongong

84 Crown Street, Wollongong 2500
Ph 02 4224 9100

Toll Free Numbers

Adult Migrant English Service (Course Information)	1800 114 707
Asset Management	132 779
Casual.*Direct* (Enquiries)	1300 367 338
Casual.*Direct* (Request a teacher)	1300 660 338
Employee Services (SASS), Bathurst	1300 338 003
Employee Services (Teachers), Newcastle	1300 338 001
Employee Services (Teachers), Wollongong	1300 338 002
International Students Centre (Enquiries)	1300 302 456
IT Help Services	1800 338 483
NSW Institute of Teachers	1300 739 338
Retraining	1300 300 634
School Administrative Support Staff (SAS) Staffing (Blacktown State Office)	1300 302 338
School and Regional Financial Operations	131 072
State Training Centres	132 811
Student Special Transport Unit	131 071
TAFE NSW Information Centre	131 601
TAFE PLUS Enquiry Service	1300 131 499
Teacher Employment Enquiries	1300 300 498
Teacher Relief Scheme	1300 367 338
Teacher Staffing (Blacktown State Office)	131 075
teach.*NSW* (Recruitment)	1300 300 498
Temporary Visa Holders Program (Enquiries)	1300 300 229

Email

For email addresses use the following format:
firstname.lastname@det.nsw.edu.au

Director-General

Location	Bridge Street
General Enquiries	Ph 02 9561 8433 Fax 02 9561 8465
Director-General of Education and Training Managing Director of TAFE NSW	Michael Coutts-Trotter Ph 02 9561 8433 Fax 02 9561 8465

Deputy Director-General Finance and Infrastructure

Location	Bridge Street
General Enquiries	Ph 02 9561 8420 Fax 02 9561 8469
Deputy Director-General	Alastair Hunter Ph 02 9561 8425 Fax 02 9561 8469

Deputy Director-General Schools

Location	Bridge Street
General Enquiries	Ph 02 9561 1138 Fax 02 9561 8558
Deputy Director-General	Trevor Fletcher Ph 02 9561 8417 Fax 02 9561 8480

Deputy Director-General Strategic Planning and Regulation

Location	Bridge Street
General Enquiries	Ph 02 9561 8148 Fax 02 9561 8155
Deputy Director-General	Leslie Loble Ph 02 9561 8148 Fax 02 9561 8155

Deputy Director-General TAFE and Community Education

Location	Bridge Street
General Enquiries	Ph 02 9561 8202 Fax 02 9561 8576
Deputy Director-General	Marie Persson Ph 02 9561 8150 Fax 02 9561 8576

Deputy Director-General Workforce Management and Systems Improvement

Location	Bridge Street
General Enquiries	Ph 02 9561 8007 Fax 02 9561 1079
Deputy Director-General	Peter Riordan Ph 02 9561 8009 Fax 02 9561 1079

Chief Procurement Officer

Location	Bridge Street
General Enquiries	Ph 02 9561 8414 Fax 02 9561 8465
Chief Procurement Officer	Paul Hopkins Ph 02 9561 8982 Fax 02 9561 8465

Executive Director Strategic Relations and Communication

Location	Bridge Street
General Enquiries	Ph 02 9561 8161 Fax 02 9561 8465
Executive Director	Chris Ryan Ph 02 9561 8214 Fax 02 9561 8465

Access and Equity

Location	Bridge St
General Enquiries	Ph 02 9561 8596 Fax 02 9561 1264
General Manager	Robyn McKerihan Ph 02 9561 8596 Fax 02 9561 1264

Aboriginal Education and Training

Location	Oxford St
General Enquiries	Ph 02 9244 5393 Fax 02 9244 5365
Director	John Lester Ph 02 9244 5426 Fax 02 9244 5365

Disability Programs

Locations	Bridge St, Oxford St, Ryde
General Enquiries	Ph 02 9244 5085 Fax 02 9266 8170
State Braille and Large Print Service	Ph 02 9886 7313 Fax 02 9886 7114
Director	Brian Smyth King Ph 02 9561 8184 Fax 02 9561 8015

Early Childhood and Interagency Programs

Location	Oxford St
General Enquiries	Ph 02 9244 5660 Fax 02 9266 8479
Director	Robyn Bale Ph 02 9244 5660 Fax 02 9266 8479

Equity Programs and Distance Education

Location	Oxford St
General Enquiries	Ph 02 9244 5343 Fax 02 9244 5014
Director	Christine Ellis Ph 02 9244 5343 Fax 02 9244 5014

Student Welfare

Location	Oxford St
General Enquiries	Ph 02 9266 8936 Fax 02 9244 5606
Director	David McKie Ph 02 9266 8936 Fax 02 9244 5606

Asset Management

Location	Bridge St
General Enquiries	Ph 02 9561 8931 Fax 02 9561 8077
General Manager	Beryl Jamieson Ph 02 9561 8632 Fax 02 9561 8077

Strategic Asset Planning & Procurement

General Enquiries	Ph 02 9561 8525 Fax 02 9561 8077
Director	Paul Culshaw Ph 02 9561 8074 Fax 02 9561 8077

Works & Facilities Management

General Enquiries	Ph 02 9561 8640 Fax 02 9561 8077
Director	Lai Yin Chiew Ph 02 9561 8269 Fax 02 9561 8077

Audit and Risk Management

Locations	Oxford St, Blacktown, Bathurst, Newcastle, Wollongong
General Enquiries	Ph 02 9244 5201 Fax 02 9244 5224
Director	Bill Middleton Ph 02 9244 5150 Fax 02 9244 5224

Centre for Learning Innovation

Location	Strathfield
General Enquiries	Ph 02 9715 8000 Fax 02 9715 8111
General Manager	Raju Varanasi Ph 02 9715 8150 Fax 02 9747 1000

Community and Migrant Education

Location	Surry Hills
General Enquiries	Ph 02 9289 9202 Fax 02 9211 0321
Director	Helen de Silva Joyce Ph 02 9289 9216 Fax 02 9211 0321
Adult and Community Education	Ph 02 9289 9211 Fax 02 9289 9166
NSW Adult Migrant English Service	Ph 02 9289 9222 Fax 02 9281 9682

Corporate Communication

Location	Bridge St
General Enquiries	Ph 02 9561 8088 Fax 02 9561 1900
Director	Tracey Sen Ph 02 9561 8431 Fax 02 9561 1900
Online Communication	Ph 02 9561 8446
School Promotions Unit	Ph 02 9561 8196
Side-By-Side and Parents Communication Folders	Ph 02 9561 1914

Corporate Marketing

Location	Bridge St
General Enquiries	Ph 02 9561 8041 Fax 02 9561 8213, 02 9561 8327
TAFE NSW Information Centre	Ph 131 601
TAFE PLUS Enquiry Service	Ph 1300 131 499 Fax 02 9283 3401
Director	Janet Stewart Ph 02 9561 8075 Fax 02 9561 8630

DET International

Locations	Elizabeth St
General Enquiries	Ph 02 8293 6926 Fax 02 8293 6972
Chief Executive	David Riordan Ph 02 8293 6924 Fax 02 8293 6972

International Delegations Unit

Locations	Elizabeth St
General Enquiries	Ph 02 8293 6941 Fax 02 8293 6972
Manager	Jenni Shipp Ph 02 8293 6941 Fax 02 8293 6972

International Students Centre

Locations	Ultimo
General Enquiries	Ph 1300 302 456 Fax 02 9217 4021
Temporary Visa Holders Program	Wollongong Ph 1300 300 229 Fax 02 4224 9074
Director	Judith Vincent Ph 02 9217 4810 Fax 02 9212 6721

Executive Support

Location	Bridge St
General Enquiries	Ph 02 9561 1128 Fax 02 9561 8479
Director	Allan Gill Ph 02 9561 1053 Fax 02 9561 8701

External Relations Policy

Location	Bridge St
General Enquiries	Ph 02 9561 1198 Fax 02 9561 8552
General Manager	Martin Graham Ph 02 9561 1203 Fax 02 9561 8552

Finance and Administration

Location	Bridge St, Oxford St, Bathurst, Wollongong
General Enquiries	Ph 02 9561 8923 Fax 02 9561 8545
Group General Manager	Ken Dixon Ph 02 9561 8922 Fax 02 9561 8545

Capital & Infrastructure Finance

Director	Phillip Peace Ph 02 9561 8914 Fax 02 9561 8545

Finance and Administration

Director	Ian Gillespie Ph 02 9561 8682 Fax 02 9561 8545

Management Accounting

Director	Chris Taggart Ph 02 9561 8675 Fax 02 9561 8871

Higher Education

Location	Bridge St
General Enquiries	Ph 02 9561 8440 Fax 02 9561 8509
Director	Andrew Rolfe Ph 02 9561 8924 Fax 02 9561 8509

Human Resources

Location	Bridge St
General Enquiries	Ph 02 9561 8523 Fax 02 9561 8955
General Manager	Trish Kelly Ph 02 9561 8523 Fax 02 9561 8955

HR Policy and Planning

Location	Bridge St
General Enquiries	Ph 02 9561 8894 Fax 02 9561 8955
Director	Diane Wasson Ph 02 9561 8928 Fax 02 9561 8955

HR Services and Systems

Locations	Bridge St, Oxford St, Bathurst, Blacktown, Newcastle,Wollongong
General Enquiries	Ph 02 9561 8921 Fax 02 9561 8089
Director	Kate Sheehan Ph 02 9561 8270 Fax 02 9561 8089

Staffing Services

Location	Blacktown
General Enquiries	Ph 02 9836 9000 Fax 02 9836 9152
Director	Peter Johnson Ph 02 9836 9810 Fax 02 9836 9090

Industrial Relations and Employment Services

Location	Bridge St
General Enquiries	Ph 02 9561 8007 Fax 02 9561 1079
Deputy Director-General	Peter Riordan Ph 02 9561 8009 Fax 02 9561 1079

Employee Performance and Conduct

Locations	Oxford St
General Enquiries	Ph 02 9266 8070 Fax 02 9266 8077
Director	Jane Thorpe Ph 02 9266 8783 Fax 02 9266 8077

Employment Screening Unit

Location	Blacktown
General Enquiries	Ph 02 9836 9200 Fax 02 9236 9222
Manager	David Rees Ph 02 9836 9213 Fax 02 9836 9233

Industrial Relations

Location	Bridge St
General Enquiries	Ph 02 9561 8249 Fax 02 9561 1062
Director	Darren Husdell Ph 02 9561 8889 Fax 02 9561 1062

Legal Services

Location	Bridge St
General Enquiries	Ph 02 9561 8538 Fax 02 9561 8543
Director	Michael Waterhouse Ph 02 9561 8127 Fax 02 9561 8543

Occupational Health and Safety

Location	Oxford St
General Enquiries	Ph 02 9266 8955 Fax 02 9266 8911
Director	Marnie O'Brien Ph 02 9266 8945 Fax 02 9266 8911

Safety and Security

Location	Bridge St
General Enquiries	Ph 02 9561 8163 Fax 02 9561 1261
Director	Ike Ellis Ph 02 9561 8163 Fax 02 9561 1261

Information Technology

Locations	Bridge St, St Leonards, Eveleigh
Help Desk	Ph 1800 338 483
General Enquiries	Ph 02 9561 8212, 02 9561 8383 Fax 02 9561 8546
Chief Information Officer	Stephen Wilson Ph 02 9561 8326 Fax 02 9561 8546
Director Information Services	Tim Anderson Ph 02 9561 8916 Fax 02 9561 8546

Learning and Development

Location	Bridge St
General Enquiries	Ph 02 9561 8059 Fax 02 9561 1026
General Manager	Gillian Shadwick Ph 02 9561 8059 Fax 02 9561 1026

Curriculum K-12

Location	Ryde
General Enquiries	Ph 02 9886 7771 Fax 02 9886 7685
Director	Robert Randall Ph 02 9886 7602 Fax 02 9886 7685

Educational Measurement and School Accountability

Location	Bankstown
General Enquiries	Ph 02 9707 6217 Fax 02 9707 6287
Director	David Wasson Ph 02 9707 6282 Fax 02 9707 6287

Professional Learning and Leadership Development

Locations	Bridge St, Ryde
General Enquiries	Ph 02 9561 1056, 02 9886 7736 Fax 02 9561 8621, 02 9886 7797
Director	Ann McIntyre Ph 02 9561 1056, 02 9886 7691 Fax 02 9561 8621, 02 9886 7797

Strategic Initiatives

Location	Oxford St, Lewisham
General Enquiries	Ph 02 9244 5080 Fax 02 9266 8233
Director	Marianne Millan Ph 02 9244 5411 Fax 02 9266 8233

Arts Unit

General Enquiries	Ph 02 8512 1109 Fax 02 9569 6878
Manager	Alan Suthers Ph 02 8512 1107 Fax 02 8512 1167

School Sports Unit

General Enquiries	Ph 02 9707 6900 Fax 02 9707 6999
Manager	Dave Power Ph 02 9707 6910 Fax 02 9707 6999

Vocational Education in Schools

Locations	Oxford St
General Enquiries	Ph 02 9244 5061 Fax 02 9244 5020
Director	Michael Hyam Ph 02 9244 5035 Fax 02 9244 5020

Media

Location	Bridge St
General Enquiries	Ph 02 9561 8501 Fax 02 9561 8510
Director	Mark Davis Ph 02 9561 8117 Fax 02 9561 8510

National Art School

Location	Darlinghurst
General Enquiries	Ph 02 9339 8744 Fax 02 9339 8740
Director	Bernard Ollis Ph 02 9339 8622 Fax 02 9339 8683

Planning and Innovation

Location	Bridge St
General Enquiries	Ph 02 9561 8744 Fax 02 9561 8941
General Manager	Jenny Donovan Ph 02 9561 8744 Fax 02 9561 8941

School & Regional Operations

Location	Bridge St
General Enquiries	Ph 02 9561 8485 Fax 02 9561 8558
Director	Paul Whelan Ph 02 9561 8514 Fax 02 9561 8558

School & Regional Policy

Location	Bridge St
General Enquiries	Ph 02 9561 8485 Fax 02 9561 8558
Director	Greg Prior Ph 02 9561 8315 Fax 02 9561 8558

State Training Services

Location	Bridge St
General Enquiries	Ph 02 9561 8157 Fax 02 9561 1160
General Manager	David Collins Ph 02 9561 8157 Fax 02 9561 1160

Apprenticeships and Traineeships

Location	Oxford St
General Enquiries	Ph 02 9266 8351 Fax 02 9266 8232
Director	Phillip Moore Ph 02 9266 8351 Fax 02 9266 8232

Industry Programs

Location	Oxford St
General Enquiries	Ph 02 9266 8103 Fax 02 9266 8220
Director	Lynnette Dorn Ph 02 9266 8103 Fax 02 9266 8220

Quality Assurance Services

Location	Oxford St
General Enquiries	Ph 02 9244 5335 Fax 02 9244 5344
Director	Margaret Willis Ph 02 9244 5335 Fax 02 9244 5344

State Training Centres

Locations	Bankstown, Chatswood, Lismore, Newcastle, Orange, Parramatta, Tamworth, Wagga Wagga, Wollongong
General Enquiries (STCs)	132 811
General Enquiries (Training Services)	Ph 02 9266 8343 Fax 02 9266 8590
Director	Phillip Moore Ph 02 9266 8351 Fax 02 9266 8232

TAFE Business

Location	Bridge St
General Enquiries	Ph 02 9561 8334 Fax 02 9561 1123
General Manager	Susan Hartigan (Acting) Ph 02 9561 1173 Fax 02 9561 8578

National Business Office

Locations	Elizabeth St
General Enquiries	Ph 02 8293 6921 Fax 02 8293 6972
Director	Francesca Saccaro Ph 02 8293 6959 Fax 02 8293 6972

TAFE Strategy

Location	Bridge St
General Enquiries	Ph 02 9561 8198 Fax 02 9561 8188
General Manager	Chris Burvill Ph 02 9561 8180 Fax 02 9561 8188

There are 10 school regions which align with TAFE NSW Institute boundaries and are supported by 78 School Education Groups (SEGs).

Each region has specialist resources including curriculum consultants, Aboriginal and equity consultants, staff to support student welfare and disabilities programs, arts and sports coordinators, regional school promotions officers, staff support officers, and school development officers.

School Education Groups provide the focus for localised delivery of teaching and learning support for schools. The School Education Group is a local point of access for community members.

Hunter/Central Coast Region

c/- Newcastle State Office
Level 1, 117 Bull St
Newcastle 2300
(Locked Bag 7
Hamilton Delivery Centre
Hamilton 2303)
Ph 02 4924 9914
Fax 02 4924 9843
Director: John Mather

School Education Groups
Hunter/Central Coast 1
Hunter/Central Coast 2
Hunter/Central Coast 3
Hunter/Central Coast 4
Hunter/Central Coast 5
Hunter/Central Coast 6
Hunter/Central Coast 7
Hunter/Central Coast 8
Hunter/Central Coast 9
Hunter/Central Coast 10

Illawarra and South East Region

5 Rowland Ave
(PO Box 1228
Wollongong 2500)
West Wollongong 2500
Ph 02 4222 2929
Fax 02 4222 2963
Director: Graeham Kennedy

School Education Groups
Batemans Bay
Goulburn/Highlands
Queanbeyan
Sapphire Coast/Monaro
Shellharbour
Shoalhaven
Wollongong
Wollongong North

New England Region

Suite 1, 11-15 Dowe St
(PO Box 368)
Tamworth 2340
Ph 02 6755 5934
Fax 02 6755 5935
Director: Des Gorman

School Education Groups
New England Central
New England North
New England South
New England West

North Coast Region

Cnr Marcia St & Rose Ave
(PO Box 1565)
Coffs Harbour 2450
Ph 02 6652 0500
Fax 02 6658 0537
Director: Carol Carrigan

School Education Groups
Clarence
Coffs Harbour
Far North Coast
Hastings
Lower North Coast
Manning Camden Haven
Mid North Coast
Richmond Valley
Southern Cross
The Wilson

Northern Sydney Region

Level 5, 13-15 Lyonpark Rd
North Ryde 2113
Ph 02 9886 7016
Fax 02 9886 7027
Director: Deonne Smith

School Education Groups
Hills Network
Hornsby Network
Lane Cove Network
Middle Harbour Network
North Shore Network
Peninsula Network

Riverina Region

Level 4, 76 Morgan St
Wagga Wagga 2650
Ph 02 6937 3871
Fax 02 6921 9651
Director: Colin Parker

School Education Groups
Riverina Central
Riverina East
Riverina North
Riverina North West
Riverina South
Riverina South West
Riverina West

South Western Sydney Region

c/- TAFE NSW –
South Western Sydney Institute
Building A, 500 Chapel St
Bankstown 2200
(PO Box 3396 Bankstown Square 2200)
Ph 02 9796 5446
Fax 02 8713 6524
Director: Tom Urry

School Education Groups
Bankstown
Campbelltown
East Hills
Fairfield
Granville
Hoxton
Ingleburn
Liverpool
Macarthur
Strathfield

Sydney Region

c/- TAFE NSW –
Sydney Institute
Building A, Level 1
Room A1.13, Mary Ann St
Ultimo 2007
Ph 02 9217 4877
Fax 02 9217 4843
Director: Phil Lambert

School Education Groups
Botany Bay
Georges River
Inner City
Inner West
Network 8
Port Hacking
Port Jackson
Woronora River

Western NSW Region

Level 1, 188 Macquarie St
Dubbo 2830
Ph 02 6841 2110
Fax 02 6841 2111
Director: Carole McDiarmid

School Education Groups
Bathurst
Bourke
Broken Hill
Dubbo
Lachlan
Orange
Warrumbungle

Western Sydney Region

c/- TAFE NSW –
Western Sydney Institute
2-10 O'Connell Street
Kingswood 2747
Ph 02 9208 9359
Fax 02 9208 9300
Director: Lindsay Wasson

School Education Groups
Blue Mountains
Cumberland
Hawkesbury
Minchinbury
Mt Druitt
Nirimba
Penrith Valley
The Hills

Bankstown (614)

South Western Sydney Region
Union St
Riverwood 2210
Ph 02 9408 8900
Fax 02 9408 8999
Director: Rod Leonarder

Banksia Road PS
Bankstown Girls HS
Bankstown Hospital School
Bankstown North PS
Bankstown PS
Bankstown Senior College
Bankstown South Infant
Bankstown West PS
Bass HS
Bass Hill PS
Berala PS
Birrong Boys HS
Birrong Girls HS
Birrong PS
Chullora PS
Condell Park HS
Condell Park PS
Georges Hall PS
Greenacre PS
Karningul School
Lidcombe PS
Mount Lewis Infant
Regents Park PS
Sunning Hill School
Villawood East PS
Wattawa Heights PS
Yagoona PS

Batemans Bay (666)

Illawarra and South East Region
Suite 15A Citi Centre
Orient St Batemans Bay 2536
Ph 02 4475 3300
Fax 02 4475 3340
Director: David Ashford

Batemans Bay HS
Batemans Bay PS
Bermagui PS
Bodalla PS
Braidwood Central
Broulee PS
Budawang School
Central Tilba PS
Huskisson PS
Milton PS
Mogo PS
Moruya HS
Moruya PS
Narooma HS
Narooma PS
Sanctuary Point PS
St Georges Basin PS
Sunshine Bay PS
Sussex Inlet PS
Tomerong PS
Ulladulla HS
Ulladulla PS
Vincentia HS
Vincentia PS

Bathurst (671)

Western NSW Region
Cnr George & Rocket Sts
Bathurst 2795
Ph 02 6334 8200
Fax 02 6332 1766
Director: Peter Harvey

Bathurst PS
Bathurst South PS
Bathurst West PS
Black Springs PS
Capertee PS
Carenne School
Cooerwull PS
Cullen Bullen PS
Denison Secondary College Bathurst Campus
Denison Secondary College Kelso Campus
Eglinton PS
Hampton PS
Kelso PS
Lithgow HS
Lithgow PS
Meadow Flat PS
Oberon HS
Oberon PS
O'Connell PS
Perthville PS
Portland Central
Raglan PS
Rockley PS
Sofala PS
The Lagoon PS
Wallerawang PS
Wattle Flat PS
Zig Zag PS

Blue Mountains (630)

Western Sydney Region
51 Henry St
Penrith 2750
Ph 02 4724 8799
Fax 02 4724 8777
Director: John McGregor

Blackheath PS
Blaxland East PS
Blaxland HS
Blaxland PS
Ellison PS
Emu Heights PS
Emu Plains PS
Faulconbridge PS
Glenbrook PS
Hazelbrook PS
Katoomba HS
Katoomba North PS
Katoomba PS
Lapstone PS
Lawson PS
Leonay PS
Leura PS
Megalong PS
Mount Riverview PS
Mount Victoria PS
Nepean HS
Penrith Lakes EEC
Springwood HS
Springwood PS
Warrimoo PS
Wentworth Falls PS
Winmalee HS
Winmalee PS

Botany Bay (605)

Sydney Region
5 Wellington St
Bondi 2026
Ph 02 9298 6900
Fax 02 9298 6940
Director: Louise Ferguson

Banksmeadow PS
Chifley PS
Clovelly PS
Daceyville PS
Eastlakes PS
Gardeners Road PS
John Brotchie Nursery School
Kensington PS
La Perouse PS
Maroubra Bay PS
Maroubra Junction PS
Mascot PS
Matraville PS
Matraville Soldiers Settlement PS
Matraville Sports HS
Pagewood PS
Rainbow Street PS
Randwick Boys HS
Randwick Girls HS
Randwick PS
Royal Prince Alfred Hospital School
South Sydney HS
St George Hospital School
Sutherland Hospital School
Sydney Childrens Hospital School

Bourke (674)

Western NSW Region
48 Oxley St
Bourke 2840
Ph 02 6870 1777
Fax 02 6870 1333
Director: Jane Cavanagh

Bourke HS
Bourke PS
Bourke-Walgett School of Distance Education
Brewarrina Central
Cobar HS
Cobar PS
Enngonia PS
Girilambone PS
Goodooga Central
Hermidale PS
Lightning Ridge Central
Louth PS
Marra Creek PS
Nyngan HS
Nyngan PS
Walgett Community College HS
Walgett Community College PS
Wanaaring PS
Weilmoringle PS

Broken Hill (677)

Western NSW Region
1A Wentworth Rd
Broken Hill 2880
Ph 08 8082 5700
Fax 08 8082 5740
Director: Trish Webb

Alma PS
Broken Hill HS
Broken Hill North PS
Broken Hill PS
Burke Ward PS
Buronga PS
Coomealla HS
Dareton PS
Euston PS
Gol Gol PS
Ivanhoe Central
Menindee Central
Morgan Street PS
Palinyewah PS
Pomona PS
Pooncarie PS
Railway Town PS
School of the Air
Tibooburra Outback School of the Air
Wentworth PS
White Cliffs PS
Wilcannia Central
Willyama HS

Campbelltown (615)

South Western Sydney Region
Cnr Lindsay & Lithgow Sts
Campbelltown 2560
Ph 02 4633 2700
Fax 02 4633 2749
Director: Kerry Edmeades

Airds HS
Ambarvale HS
Ambarvale PS
Appin PS
Beverley Park School
Blairmount PS
Bradbury PS
Briar Road PS
Campbelltown East PS
Campbelltown HS
Campbelltown North PS
Campbelltown PS
Claymore PS
Dorchester School
Eagle Vale HS
Eschol Park PS
John Warby PS
Kearns PS
Kentlyn PS
Leumeah HS
Leumeah PS
Lomandra School
Mary Brooksbank School
Rosemeadow PS
Ruse PS
St Helens Park PS
Thomas Acres PS
Thomas Reddall HS
Woodland Road PS

Clarence (636)

North Coast Region
97 Mary St
Grafton 2460
Ph 02 6641 5000
Fax 02 6641 5099
Director: Ron Phillips

Baryulgil PS
Chatsworth Island PS
Copmanhurst PS
Coutts Crossing PS
Cowper PS
Gillwinga PS
Glenreagh PS
Grafton HS
Grafton PS
Gulmarrad PS
Harwood Island PS
Iluka PS
Induna School
Lawrence PS
Maclean HS
Maclean PS
Nymboida PS
Palmers Island PS
South Grafton HS
South Grafton PS
Tucabia PS
Ulmarra PS
Westlawn PS
Woodford Dale PS
Wooli PS
Yamba PS

Coffs Harbour (637)

North Coast Region
Corner Lyons & Toormina Rds
Toormina 2452
Ph 02 6690 9500
Fax 02 6658 4798
Director: Dianne Marshall

Boambee PS
Bonville PS
Coffs Harbour HS
Coffs Harbour Learning Centre
Coffs Harbour PS
Coffs Harbour Senior College
Coramba PS
Corindi PS
Crossmaglen PS
Karangi PS
Kororo PS
Lowanna PS
Mullaway PS
Nana Glen PS
Narranga PS
Orara HS
Orara Upper PS
Sandy Beach PS
Sawtell PS
Toormina HS
Toormina PS
Tyalla PS
Ulong PS
William Bayldon PS
Woolgoolga HS
Woolgoolga PS

Cumberland (627)

Western Sydney Region
Nirimba Bldg T3C
Eastern Rd, Quakers Hill 2763
Ph 02 9208 7611
Fax 02 9208 7635
Director: Gail Wykes

Arthur Phillip HS
Beresford Road PS
Burnside PS
Carlingford PS
Carlingford West PS
Cumberland HS
Dundas PS
Ermington West PS
Girraween PS
Greystanes HS
Greystanes PS
Hilltop Road PS
James Ruse Agricultural HS
Macarthur Girls HS
Macquarie Boys HS
Oatlands PS
Parramatta East PS
Parramatta HS
Parramatta North PS
Parramatta PS
Parramatta West PS
Pendle Hill PS
Redbank School
Rosehill PS
Rowland Hassall School
Rydalmere East PS
Rydalmere PS
Telopea PS
The Childrens Hospital School
Yates Avenue PS

Dubbo (676)

Western NSW Region
Level 2, 37 Carrington Ave
Dubbo 2830
Ph 02 6883 6300
Fax 02 6884 3787
Director: Paul Loxley (Relieving)

Ballimore PS
Buninyong PS
Dubbo College Delroy
Dubbo College Senior
Dubbo College South
Dubbo North PS
Dubbo PS
Dubbo School of Distance Education
Dubbo South PS
Dubbo West PS
Eumungerie PS
Geurie PS
Lincoln School
Mian School
Mumbil PS
Nanima PS
Narromine HS
Narromine PS
Orana Heights PS
Peak Hill Central
Red Hill EEC
Stuart Town PS
Tottenham Central
Trangie Central
Trundle Central
Tullamore Central
Wambangalang EEC
Warren Central
Warrumbungle National Park EEC
Wellington HS
Wellington PS
Wongarbon PS
Yeoval Central

East Hills (616)

South Western Sydney Region
Union St
Riverwood 2210
Ph 02 9408 8900
Fax 02 9408 8999
Director: Cheryl Best

Beverly Hills Girls HS
Beverly Hills North PS
Broderick Gillawarna School
Caroline Chisholm School
Chipping Norton PS
East Hills Boys HS
East Hills Girls HS
East Hills PS
Georges River EEC
Hannans Road PS
Milperra PS
Moorebank HS
Narwee PS
Newbridge Heights PS
Nuwarra PS
Padstow Heights PS
Padstow North PS
Padstow Park PS
Panania North PS
Panania PS
Picnic Point HS
Picnic Point PS
Revesby PS
Revesby South PS
Riverwood PS
Sir Joseph Banks HS
Tower Street PS

Fairfield (617)

South Western Sydney Region
Wolumba St
Chester Hill 2162
Ph 02 9793 4900
Fax 02 9793 4943
Director: James Coleborne

Bonnyrigg HS
Bonnyrigg PS
Cabramatta HS
Cabramatta PS
Cabramatta West PS
Canley Heights PS
Canley Vale HS
Canley Vale PS
Carramar PS
Chester Hill HS
Chester Hill North PS
Chester Hill PS
Fairfield Heights PS
Fairfield HS
Fairfield PS
Fairfield West PS
Fairvale HS
Fairvale PS
Harrington Street PS
King Park PS
Lansvale East PS
Lansvale PS
Smithfield PS
Smithfield West PS
St Johns Park PS
Villawood North PS
Westfields Sports HS
Yennora PS

Far North Coast (632)

North Coast Region
Level 2, 12 King St
Murwillumbah 2484
Ph 02 6670 2300
Fax 026672 5192
Director: Ron Hankin

Banora Point HS
Banora Point PS
Bilambil PS
Bogangar PS
Burringbar PS
Caldera School
Carool PS
Centaur PS
Chillingham PS
Condong PS
Crabbes Creek PS
Crystal Creek PS
Cudgen PS
Dungay PS
Duranbah PS
Fingal Head PS
Kingscliff HS
Kingscliff PS
Murwillumbah East PS
Murwillumbah HS
Murwillumbah PS
Murwillumbah South Infant
Pottsville Beach PS
Stokers Siding PS
Terranora PS
Tumbulgum PS
Tweed Heads PS
Tweed Heads South PS
Tweed River HS
Tyalgum PS
Uki PS
Wollumbin HS

Georges River (604)

Sydney Region
SIT, Bldg A, Rm A1:13
Mary Ann St Ultimo 2007
Ph 02 9217 3446
Fax 02 9217 4843
Director: Dianne Barry

Bald Face PS
Blakehurst HS
Blakehurst PS
Brighton-Le-Sands PS
Carinya School
Carlton South PS
Connells Point PS
Georges River College Hurstville Boys
Georges River College Oatley Senior
Georges River College Peakhurst
Georges River College Penshurst Girls
Hurstville Grove Infants
Hurstville PS
Hurstville South PS
James Cook Boys HS
Kogarah HS
Kogarah PS
Lugarno PS
Moorefield Girls HS
Mortdale PS
Oatley PS
Oatley West PS
Peakhurst PS
Peakhurst South PS
Peakhurst West PS
Penshurst PS
Ramsgate PS
Rockdale PS
St George Girls HS
St George School
Sydney Technical HS

Goulburn/Highlands (663)

Illawarra and South East Region
Shellharbour Office
Cnr Shellharbour &
Lake Entrance Rds, Warilla 2528
Ph 02 4251 9900
Fax 02 4251 9945
Director: Ann Henniker

Avoca PS
Berrima PS
Bowral HS
Bowral PS
Bradfordville PS
Bundanoon PS
Burrawang PS
Colo Vale PS
Exeter PS
Glenquarry PS
Goulburn East PS
Goulburn HS
Goulburn North PS
Goulburn PS
Goulburn South PS
Goulburn West PS
Highlands School
Hill Top PS
Kangaloon PS
Marulan PS
Mittagong PS
Moss Vale HS
Moss Vale PS
Mulwaree HS
Penrose PS
Robertson PS
Sutton Forest PS
Tallong PS
Tangara School
The Crescent School
Wingello PS
Wollondilly PS

Granville (618)

South Western Sydney Region
65 Albert Rd
Strathfield 2135
Ph 02 9582 6300
Fax 02 9582 6340
Director: Maria Gray-Spence

Auburn Girls HS
Auburn North PS
Auburn PS
Auburn West PS
Blaxcell Street PS
Fowler Road School
Granville Boys HS
Granville East PS
Granville PS
Granville South HS
Granville South PS
Guildford PS
Guildford West PS
Holroyd HS
Holroyd School
Merrylands East PS
Merrylands HS
Merrylands PS
Old Guildford PS
Ringrose PS
Sefton HS
Sefton Infant
Sherwood Grange PS
Verona School
Widemere PS

Hastings (639)

North Coast Region
Findlay Ave
Port Macquarie 2444
Ph 02 6586 6900
Fax 02 6586 6999
Director: Warren Burke

Aldavilla PS
Beechwood PS
Bellbrook PS
Bellimbopinni PS
Byabarra PS
Comboyne PS
Crescent Head PS
Frederickton PS
Gladstone PS
Green Hill PS
Hastings PS
Huntingdon PS
Kempsey East PS
Kempsey HS
Kempsey South PS
Kempsey West PS
Kinchela PS
Long Flat PS
Melville HS
Millbank PS
North East PS of Distance Education
Port Macquarie HS
Port Macquarie PS
Rollands Plains Upper PS
Smithtown PS
South West Rocks PS
Tacking Point PS
Telegraph Point PS
Wauchope HS
Wauchope PS
Westport HS
Westport PS
Willawarrin PS

Hawkesbury (631)

Western Sydney Region
51 Henry st
Penrith 2750
Ph 02 4724 8799
Fax 02 4724 8777
Director: Francesca Molluso

Bilpin PS
Bligh Park PS
Brewongle EEC
Castlereagh PS
Cattai PS
Colo Heights PS
Colo HS
Comleroy Road PS
Ebenezer PS
Freemans Reach PS
Glossodia PS
Grose View PS
Hawkesbury HS
Hobartville PS
Kurmond PS
Kurrajong East PS
Kurrajong North PS
Kurrajong PS
Londonderry PS
Longneck Lagoon EEC
Macdonald Valley PS
Maraylya PS
Maroota PS
Oakville PS
Pitt Town PS
Richmond HS
Richmond North PS
Richmond PS
Vineyard PS
Wilberforce PS
Windsor HS
Windsor Park PS
Windsor PS
Windsor South PS
Wisemans Ferry PS

Hills Network (609)

Northern Sydney Region
Level 2, 20 George St
Hornsby 2077
Ph 02 9987 3900
Fax 02 9987 3930
Director: Janet Wasson

Baulkham Hills North PS
Beecroft PS
Carlingford HS
Castle Hill HS
Castle Hill PS
Cheltenham Girls HS
Cherrybrook PS
Cherrybrook Technology HS
Epping Boys HS
Epping Heights PS
Epping North PS
Epping PS
Epping West PS
Glenhaven PS
John Purchase PS
Karonga School
Muirfield HS
Murray Farm PS
North Rocks PS
Oakhill Drive PS
Pennant Hills HS
Pennant Hills PS
Roselea PS
Samuel Gilbert PS
Thornleigh West PS
West Pennant Hills PS

Hornsby Network (608)

Northern Sydney Region
Level 2, 20 George St
Hornsby 2077
Ph 02 9987 3900
Fax 02 9987 3930
Director: Bob Dunne

Annangrove PS
Arcadia PS
Asquith Boys HS
Asquith Girls HS
Asquith PS
Berowra PS
Brooklyn PS
Clarke Road School
Cowan PS
Dural PS
Galston HS
Galston PS
Gibberagong EEC
Glenorie PS
Hillside PS
Hornsby Girls HS
Hornsby Heights PS
Hornsby North PS
Hornsby South PS
Kenthurst PS
Middle Dural PS
Mount Colah PS
Mount Kuring-gai PS
Normanhurst Boys HS
Normanhurst PS
Normanhurst West PS
Waitara PS
Wideview PS

Hoxton (619)

South Western Sydney Region
Wolumba St,
Chester Hill 2162
Ph 02 9793 4900
Fax 02 9793 4943
Director: Ray Palmer

Austral PS
Badgerys Creek PS
Bonnyrigg Heights PS
Bossley Park HS
Bossley Park PS
Bringelly PS
Busby West PS
Cecil Hills HS
Cecil Hills PS
Edensor Park PS
Governor Philip King PS
Green Valley PS
Greenway Park PS
Hinchinbrook PS
Horsley Park PS
Hoxton Park HS
Hoxton Park PS
Hurlstone Agricultural HS
James Busby HS
John Edmondson HS
Kemps Creek PS
Leppington PS
Prairievale PS
Prairiewood HS
Rossmore PS
St Johns Park HS
William Stimson PS

Hunter/Central Coast 1 (642)

Hunter/Central Coast Region
Level 3, 40 Mann St
Gosford 2250
Ph 02 4348 9100
Fax 02 4348 9199
Director: Maree Roberts

Bateau Bay PS
Berkeley Vale PS
Blue Haven PS
Brisbania PS
Brooke Avenue PS
Budgewoi PS
Chertsey PS
Chittaway Bay PS
Erina HS
Gosford East PS
Holgate PS
Killarney Vale PS
North Gosford Learning Centre
Northlakes HS
Northlakes PS
Rumbalara Environmental Education Centre
The Entrance PS
Tuggerah Lakes Secondary College Berkeley Vale
Tuggerah Lakes Secondary College The Entrance
Tuggerah Lakes Secondary College Tumbi Umbi
Woodport PS

Hunter/Central Coast 2 (643)

Hunter/Central Coast Region
Level 3, 40 Mann St
Gosford 2250
Ph 02 4348 9100
Fax 02 4348 9199
Director: David Cullen

Dooralong PS
Erina Heights PS
George Anderson Walpole School
Girrakool School
Glenvale School
Gorokan HS
Gorokan PS
Gosford HS
Hopetown School
Jilliby PS
Kanwal PS
Narara Valley HS
Niagara Park PS
Tacoma PS
Terrigal HS
Terrigal PS
Toukley PS
Tuggerah PS
Tuggerawong PS
Valley View PS
Wadalba Community School
Wamberal PS
Warnervale PS
Woongarrah PS
Wyoming PS
Wyong Creek PS
Wyong Grove PS
Wyong HS
Wyong PS
Yarramalong PS

Hunter/Central Coast 3 (644)

Hunter/Central Coast Region
Level 3, 40 Mann St
Gosford 2250
Ph 02 4348 9100
Fax 02 4348 9199
Director: Frank Potter

Avoca Beach PS
Brisbane Water Secondary College
Brisbane Water Secondary College Umina
Brisbane Water Secondary College Woy Woy
Central Mangrove PS
Copacabana PS
Empire Bay PS
Ettalong PS
Gosford PS
Gwandalan PS
Henry Kendall HS
Kariong PS
Kincumber HS
Kincumber PS
Kulnura PS
Lake Munmorah HS
Lake Munmorah PS
Lisarow HS
Lisarow PS
Mannering Park PS
Mooney Mooney PS*
*(*Not operating due to no enrolments)*
Narara PS
Ourimbah PS
Peats Ridge PS
Point Clare PS
Pretty Beach PS
Somersby PS
Spencer PS
Umina PS
Woy Woy PS
Woy Woy South PS

Hunter/Central Coast 4 (645)

Hunter/Central Coast Region
Cnr Brunker & Glebe Rds
Adamstown 2289
Ph 02 4904 3900
Fax 02 4904 3950
Director: Roger Pryor

Barnsley PS
Beresfield PS
Black Hill PS
Cardiff HS
Cardiff North PS
Cardiff PS
Cardiff South PS
Carrington PS
Edgeworth Heights PS
Fern Bay PS
Francis Greenway HS
Garden Suburb PS
Glendon School
Hamilton PS
Hamilton South PS
Hillsborough PS
Hunter River Community School
Hunter School of the Performing Arts
John Hunter Hospital School
Merewether HS
Merewether PS
Millers Forest PS
Newcastle East PS
Newcastle HS
Newcastle School
Stockton PS
Tarro PS
The Junction PS
Thornton PS
Wakefield School
West Wallsend HS
West Wallsend PS
Woodberry PS

Hunter/Central Coast 5 (646)

Hunter/Central Coast Region
Cnr Brunker & Glebe Rds
Adamstown 2289
Ph 02 4904 3900
Fax 02 4904 3950
Director: Daved Peckham

Adamstown PS
Awabakal Field Study Centre
Belair PS
Cameron Park School
Callaghan College
Callaghan College Jesmond
Callaghan College Wallsend
Callaghan College Waratah
Five Islands School
Glendore PS
Hamilton North PS
Heaton PS
Hunter Orthopaedic School
Islington PS
Jesmond PS
Kotara HS
Kotara School
Kotara South PS
Lambton HS
Lambton PS
Maryland PS
Mayfield East PS
Mayfield West PS
Merewether Heights PS
Minmi PS
New Lambton Heights Infants
New Lambton PS
New Lambton South PS
Plattsburg PS
Shortland PS
Tighes Hill PS
Wallsend PS
Wallsend South PS
Waratah PS
Waratah West PS
Wetlands EEC

Hunter/Central Coast 6 (647)

Hunter/Central Coast Region
11- 15 Josephson St
Swansea 2281
Ph 02 4972 3000
Fax 02 4971 6196
Director: John Theaker (Acting)

Arcadia Vale PS
Argenton PS
Biraban PS
Blackalls Park PS
Bonnells Bay PS
Boolaroo PS
Booragul PS
Coal Point PS
Cooranbong PS
Dora Creek PS
Edgeworth PS
Elermore Vale PS
Eraring PS
Fassifern PS
Fennell Bay PS
Glendale East Public School
Glendale High School
Lake Macquarie HS
Morisset HS
Morisset PS
Rathmines PS
Speers Point PS
Teralba PS
Toronto HS
Toronto PS
Wangi Wangi PS
Wyee PS

Hunter/Central Coast 7 (648)

Hunter/Central Coast Region
11- 15 Josephson St
Swansea 2281
Ph 02 4972 3000
Fax 02 4971 6196
Director: Kay Peno

Belmont HS
Belmont North PS
Belmont PS
Biddabah PS
Blacksmiths PS
Caves Beach PS
Charlestown East PS
Charlestown PS
Charlestown South PS
Dudley PS
Eleebana PS
Floraville PS
Gateshead PS
Gateshead West PS
Hunter Sports HS
Jewells PS
Kahibah PS
Lakeside School
Marks Point PS
Mount Hutton PS
Nords Wharf PS
Pelican Flat PS
Redhead PS
Swansea HS
Swansea PS
Valentine PS
Warners Bay HS
Warners Bay PS
Whitebridge HS
Windale PS

Hunter/Central Coast 8 (649)

Hunter/Central Coast Region
1st Flr, Suite 7, 56 Brook St
Muswellbrook 2333
Ph 02 6541 7000
Fax 02 6541 7007
Director: Ian Anderson

Aberdeen PS
Belltrees PS
Blandford PS
Branxton PS
Broke PS
Cassilis PS
Denman PS
Ellerston PS
Gillieston PS
Greta PS
Jerrys Plains PS
King Street PS
Kirkton PS
Lochinvar PS
Martindale PS
Merriwa Central School
Milbrodale PS
Mount Pleasant PS
Murrurundi PS
Muswellbrook HS
Muswellbrook PS
Muswellbrook South PS
Rutherford HS
Rutherford PS
Rouchel PS
Sandy Hollow PS
Scone HS
Scone PS
Singleton Heights PS
Singleton HS
Singleton PS
Telarah PS

Hunter/Central Coast 9 (650)

Hunter/Central Coast Region
Level 1, 2 Caroline Place
Maitland 2320
Ph 02 4931 3500
Fax 02 4931 3599
Director: Karen Jones

Abermain PS
Bellbird PS
Bolwarra PS
Cessnock East PS
Cessnock HS
Cessnock PS
Cessnock West PS
Congewai PS
Ellalong PS
Hinton PS
Iona PS
Kearsley PS
Kitchener PS
Kurri Kurri HS
Kurri Kurri PS
Laguna PS
Largs PS
Maitland HS
Metford PS
Millfield PS
Morpeth PS
Mount Kanwary PS
Mount View HS
Mulbring PS
Nulkaba PS
Pelaw Main PS
Paxton PS
Stanford Merthyr Infants
Tenambit PS
Weston PS
Wollombi PS

Hunter/Central Coast 10 (650)

Hunter/Central Coast Region
Level 1, 2 Caroline Place
Maitland 2320
Ph 02 4931 3500
Fax 02 4931 3599
Director: Graeme Valler

- Anna Bay PS
- Ashtonfield PS
- Bobs Farm PS
- Clarence Town PS
- Dungog HS
- Dungog PS
- Glen William PS
- Grahamstown PS
- Gresford PS
- Hunter River HS
- Irrawang HS
- Irrawang PS
- Karuah PS
- Maitland East PS
- Maitland Grossmann HS
- Maitland PS
- Martins Creek PS
- Medowie PS
- Nillo Infants School
- Paterson PS
- Raymond Terrace PS
- Salt Ash PS
- Seaham PS
- Shoal Bay PS
- Soldiers Point PS
- Tanilba Bay PS
- Tomaree HS
- Tomaree PS
- Vacy PS
- Williamtown PS
- Wirreanda PS
- Woodberry Learning Centre

Ingleburn (620)

South Western Sydney Region
Roy Watts Rd
Glenfield 2167
Ph 02 9203 9900
Fax 02 9203 9999
Director: Peter Phelps

- Campbellfield PS
- Curran PS
- Glenfield PS
- Glenwood PS
- Guise PS
- Hammondville PS
- Holsworthy HS
- Holsworthy PS
- Ingleburn HS
- Ingleburn North PS
- Ingleburn PS
- James Meehan HS
- Macquarie Fields HS
- Macquarie Fields PS
- Minto PS
- Passfield Park School
- Robert Townson HS
- Robert Townson PS
- Sackville Street PS
- Sarah Redfern HS
- Sarah Redfern PS
- St Andrews PS
- The Grange PS
- Wattle Grove PS

Inner City (603)

Sydney Region
SIT, Bldg A, Rm A1:13
Mary Ann St Ultimo 2007
Ph 02 9217 3446
Fax 02 9217 4843
Director: Paul Parks

- Alexandria Park Community School
- Bourke Street PS
- Bridge Road School
- Camdenville PS
- Centennial Park School
- Cook School
- Crown Street PS
- Darlington PS
- Dulwich High of Visual Arts & Design
- Dulwich Hill PS
- Edgeware School
- Ferncourt PS
- Forest Lodge PS
- Glebe PS
- Green Square School
- Lewisham PS
- Marrickville PS
- Marrickville West PS
- Newtown HS of Performing Arts
- Newtown North PS
- Newtown PS
- Petersham PS
- Taverners Hill Infants
- Tempe HS
- Tempe PS
- Ultimo PS
- Wilkins PS
- Woniora Road School

Inner West (602)

Sydney Region
SIT, Bldg A, Rm A1:13
Mary Ann St Ultimo 2007
Ph 02 9217 3446
Fax 02 9217 4843
Director: Debbie Hockings

- Arncliffe PS
- Arncliffe West Infants
- Ashbury PS
- Ashfield Boys HS
- Ashfield PS
- Athelstane PS
- Bardwell Park Infants
- Beverly Hills PS
- Bexley North PS
- Bexley PS
- Burwood Girls HS
- Cairnsfoot School
- Canterbury Boys HS
- Canterbury Girls HS
- Canterbury PS
- Canterbury South PS
- Croydon Park PS
- Croydon PS
- Earlwood PS
- Kingsgrove North HS
- Kingsgrove PS
- McCallums Hill PS
- Penshurst West PS
- Summer Hill PS
- Undercliffe PS
- Yeo Park Infants

Lachlan (675)

Western NSW Region
Level 1, 60-62 McNamara St
Orange 2800
Ph 02 6392 8400
Fax 02 6392 8445
Director: Denis Armstrong

Bedgerebong PS
Bogan Gate PS
Canowindra HS
Canowindra PS
Caragabal PS
Cargo PS
Condobolin HS
Condobolin PS
Corinella PS
Cowra HS
Cowra PS
Eugowra PS
Forbes HS
Forbes North PS
Forbes PS
Gooloogong PS
Grenfell PS
Holman Place School
Holmwood PS
Koorawatha PS
Middleton PS
Mulyan PS
Parkes East PS
Parkes HS
Parkes PS
Quandialla Central
The Henry Lawson HS
Woodstock PS
Wyangala Dam PS

Lane Cove Network (612)

Northern Sydney Region
Level 5, 13-15 Lyonpark Rd
North Ryde 2113
Ph 02 9886 7000
Fax 02 9886 7070
Director: Ken Olah

Arndell School
Boronia Park PS
Denistone East PS
Eastwood Heights PS
Eastwood PS
Ermington PS
Field of Mars EEC
Gladesville PS
Greenwich PS
Hunters Hill HS
Hunters Hill PS
Kent Road PS
Lane Cove PS
Lane Cove West PS
Marsden HS
Meadowbank PS
Melrose Park PS
North Ryde PS
North Sydney Boys HS
North Sydney Girls HS
North Sydney PS
Putney PS
Riverside Girls HS
Ryde East PS
Ryde PS
Ryde Secondary College
Truscott Street PS
West Ryde PS

Liverpool (621)

South Western Sydney Region
Roy Watts Rd
Glenfield 2167
Ph 02 9203 9900
Fax 02 9203 9999
Director: Kerryanne Knox

Ajuga School
Ashcroft HS
Ashcroft PS
Busby PS
Campbell House School
Cartwright PS
Casula HS
Casula PS
Dalmeny PS
Glenfield Park School
Heckenberg PS
Lawrence Hargrave School
Les Powell School
Liverpool Boys HS
Liverpool Girls HS
Liverpool Hospital School
Liverpool PS
Liverpool West PS
Lurnea HS
Lurnea PS
Mainsbridge School
Marsden Road PS
Miller HS
Miller PS
Mount Pritchard East PS
Mount Pritchard PS
Prestons PS
Sadleir PS
Warwick Farm PS

Lower North Coast (641)

North Coast Region
Middle St
Forster 2428
Ph 02 6591 7600
Fax 02 6591 7608
Director: Dennis Ang

Barrington PS
Bobin PS
Booral PS
Bulahdelah Central
Bungwahl PS
Coolongolook PS
Elands PS
Forster PS
Gloucester HS
Gloucester PS
Great Lakes College Forster Campus
Great Lakes College Tuncurry Junior Campus
Great Lakes College Tuncurry Senior Campus
Hallidays Point PS
Krambach PS
Mount George PS
Nabiac PS
Pacific Palms PS
Rookhurst PS
Stratford PS
Stroud PS
Stroud Road PS
Tea Gardens PS
Tuncurry PS
Wingham Brush PS
Wingham HS
Wingham PS

Macarthur (622)

South Western Sydney Region
Cnr Lindsay & Lithgow Sts
Campbelltown 2560
Ph 02 4633 2700
Fax 02 4633 2749
Director: Mark Grant

Bargo PS
Buxton PS
Camden HS
Camden Park EEC
Camden PS
Camden South PS
Cawdor PS
Cobbitty PS
Currans Hill PS
Douglas Park PS
Elderslie HS
Elizabeth Macarthur HS
Harrington Park PS
Mawarra PS
Mount Annan HS
Mount Annan PS
Mount Hunter PS
Narellan PS
Narellan Vale PS
Oakdale PS
Picton HS
Picton PS
Tahmoor PS
The Oaks PS
Thirlmere PS
Warragamba PS
Wooglemai EEC
Yanderra PS

Manning Camden Haven (640)

North Coast Region
Middle St
Forster 2428
Ph 02 6591 7600
Fax 02 6591 7608
Director: Noel McManus

Camden Haven HS
Chatham HS
Chatham PS
Coopernook PS
Crowdy Head PS
Cundletown PS
Ghinni Ghinni PS
Hannam Vale PS
Harrington PS
Herons Creek PS
Johns River PS
Kendall PS
Lansdowne PS
Laurieton PS
Manning Gardens PS
Mitchells Island PS
Moorland PS
North Haven PS
Old Bar PS
Oxley Island PS
Taree HS
Taree PS
Taree West PS
Tinonee PS
Upper Lansdowne PS

Mid North Coast (638)

North Coast Region
Corner Lyons & Toormina Rds
Toormina 2452
Ph 02 6690 9500
Fax 02 6658 4798
Director: Robyn Hunt

Bellingen HS
Bellingen PS
Bowraville Central
Cascade EEC
Dorrigo HS
Dorrigo PS
Dundurrabin PS
Eungai PS
Frank Partridge VC PS
Hernani PS
Lord Howe Island Central
Macksville HS
Macksville PS
Medlow PS
Nambucca Heads HS
Nambucca Heads PS
Orama PS
Raleigh PS
Repton PS
Scotts Head PS
Stuarts Point PS
Urunga PS

Middle Harbour Network (611)

Northern Sydney Region
72 Fisher Rd
Dee Why 2099
Ph 02 9941 3000
Fax 02 9941 3030
Director: Kathryn Brennan

Allambie Heights PS
Arranounbai School
Artarmon PS
Balgowlah North PS
Beacon Hill PS
Beauty Point PS
Belrose PS
Cammeray PS
Davidson HS
Forestville PS
Frenchs Forest PS
Kambora PS
Killarney Heights HS
Killarney Heights PS
Middle Harbour PS
Mimosa PS
Mosman HS
Mosman PS
Narraweena PS
Neutral Bay PS
Northbridge PS
Palm Avenue School
Seaforth PS
Terrey Hills PS
The Beach School
The Forest HS
Wakehurst PS
Willoughby Girls HS
Willoughby PS

Minchinbury (625)

Western Sydney Region
Hindemith Ave
Emerton 2770
Ph 02 8808 4900
Fax 02 9628 2413
Director: Chris Johnson

Banks PS
Bennett Road PS
Blacktown West PS
Blackwell PS
Clairgate PS
Colyton HS
Colyton PS
Crawford PS
Doonside HS
Doonside PS
Eastern Creek PS
Erskine Park HS
Evans HS
James Erskine PS
Marayong South PS
Minchinbury PS
Oxley Park PS
Rooty Hill HS
Rooty Hill PS
St Clair HS
St Clair PS
St Marys PS
St Marys Senior HS
St Marys South PS
Walters Road PS

Mt Druitt (626)

Western Sydney Region
Hindemith Ave
Emerton 2770
Ph 02 8808 4900
Fax 02 9628 2413
Director: John Williams

Bidwill PS
Blackett PS
Chifley College Bidwill Campus
Chifley College Dunheved
Chifley College Mount Druitt
Chifley College Senior
Chifley College Shalvey
Dawson PS
Emerton PS
Glendenning PS
Halinda School
Hassall Grove PS
Hebersham PS
Lethbridge Park PS
Madang Avenue PS
Mount Druitt PS
Niland School
Noumea PS
Plumpton HS
Plumpton House School
Plumpton PS
Ropes Crossing PS
Shalvey PS
St Marys North PS
Tregear PS
Whalan PS
William Dean PS
Willmot PS

Network 8 (606)

Sydney Region
5 Wellington St
Bondi 2026
Ph 02 9298 6900
Fax 02 9298 6940
Director: Sylvia Corish

Annandale North PS
Australia Street Infants
Bellevue Hill PS
Botany PS
Bronte PS
Carlton PS
Clemton Park PS
Cleveland Street Intensive English HS
Coogee PS
Double Bay PS
Erskineville PS
Fort Street HS
Glenmore Road PS
Gymea HS
J J Cahill Memorial HS
Kingsgrove HS
Kyeemagh Infants
Malabar PS
Marrickville HS
Open HS
Paddington PS
Rose Bay PS
Rose Bay Secondary College
South Coogee PS
St Peters PS
Stanmore PS
Sydney Distance Education HS
Sydney Distance Education PS
Taren Point PS

New England Central (653)

New England Region
175 Rusden St
Armidale 2350
Ph 02 6776 4100
Fax 02 6776 4145
Director: Jim White

Armidale City PS
Armidale HS
Attunga PS
Ben Venue PS
Bendemeer PS
Drummond Memorial PS
Dungowan PS
Duval HS
Farrer Memorial Agricultural HS
Kellys Plains PS
Kentucky PS
Kingstown PS
Kootingal PS
Martins Gully PS
Moonbi PS
Nemingha PS
Newling PS
Niangala PS
Nowendoc PS
Oxley HS
Oxley Vale PS
Rocky River PS
Sandon PS
Tamworth PS
Tintinhull PS
Uralla Central
Walcha Central
Woolbrook PS
Yarrowitch PS

New England North (652)

New England Region
175 Rusden St
Armidale 2350
Ph 02 6776 4100
Fax 02 6776 4145
Director: Peter Pickett

- Ashford Central
- Bald Blair PS
- Ben Lomond PS
- Black Mountain PS
- Bonshaw PS
- Bundarra Central
- Chandler PS
- Deepwater PS
- Delungra PS
- Ebor PS
- Emmaville Central
- Gilgai PS
- Glen Innes HS
- Glen Innes PS
- Glen Innes West Infant
- Gum Flat PS
- Guyra Central
- Inverell HS
- Inverell PS
- Jennings PS
- Macintyre HS
- Mingoola PS
- Red Range PS
- Ross Hill PS
- Tenterfield HS
- Thalgarrah EEC
- The Sir Henry Parkes Memorial PS
- Tingha PS
- Wongwibinda PS
- Wytaliba PS

New England South (654)

New England Region
155-157 Marius St
Tamworth 2340
Ph 02 6755 5000
Fax 02 6755 5020
Director: Ruythe Dufty

- Barraba Central
- Blackville PS
- Boggabri PS
- Bullimbal School
- Carroll PS
- Curlewis PS
- Currabubula PS
- Duri PS
- G S Kidd Memorial School
- Gunnedah HS
- Gunnedah PS
- Gunnedah South PS
- Hillvue PS
- Manilla Central
- Mullaley PS
- Nundle PS
- Parry School
- Peel HS
- Premer PS
- Quirindi HS
- Quirindi PS
- Somerton PS
- Spring Ridge PS
- Tambar Springs PS
- Tamworth HS
- Tamworth South PS
- Tamworth West PS
- Timbumburi PS
- Walhallow PS
- Wallabadah PS
- Werris Creek PS
- Westdale PS
- Willow Tree PS
- Woolomin PS

New England West (655)

New England Region
66-68 Frome St
Moree 2400
Ph 02 6757 3000
Fax 02 6757 3043
Director: John Charles

- Barwon Learning Centre
- Bellata PS
- Bingara Central
- Boggabilla Central
- Boomi PS
- Bullarah PS
- Burren Junction PS
- Collarenebri Central
- Croppa Creek PS
- Fairfax PS
- Garah PS
- Gravesend PS
- Mallawa PS
- Moree East PS
- Moree PS
- Moree Secondary College Albert St
- Moree Secondary College Carol Ave
- Mungindi Central
- Narrabri HS
- Narrabri PS
- Narrabri West PS
- North Star PS
- Pallamallawa PS
- Pilliga PS
- Rowena PS
- Toomelah PS
- Tulloona PS
- Warialda HS
- Warialda PS
- Wee Waa HS
- Wee Waa PS
- Yetman PS

Nirimba (624)

Western Sydney Region
Nirimba Bldg T3C
Eastern Rd Quakers Hill 2763
Ph 02 9208 7611
Fax 02 9208 7635
Director: Mark Anderson

- Barnier PS
- Bert Oldfield PS
- Blacktown Boys HS
- Blacktown Girls HS
- Blacktown North PS
- Blacktown South PS
- Casuarina School
- Coreen School
- Hambledon PS
- Kings Langley PS
- Lalor Park PS
- Lynwood Park PS
- Marayong Heights PS
- Marayong PS
- Marsden Park PS
- Metella Road PS
- Mitchell HS
- Quakers Hill East PS
- Quakers Hill HS
- Quakers Hill PS
- Riverstone HS
- Riverstone PS
- Schofields PS
- Seven Hills HS
- Seven Hills North PS
- Seven Hills PS
- Seven Hills West PS
- Shelley PS
- The Hills Sports HS
- The Meadows PS
- Vardys Road PS
- William Rose School
- Wyndham College

North Shore Network (613)

Northern Sydney Region
Level 5, 13-15 Lyonpark Rd
North Ryde 2113
Ph 02 9886 7000
Fax 02 9886 7070
Director: Jane Simmons

- Beaumont Road PS
- Bradfield College
- Castle Cove PS
- Chatswood HS
- Chatswood PS
- Cromehurst School
- Gordon East PS
- Gordon West PS
- Killara HS
- Killara PS
- Ku-ring-gai HS
- Lindfield East PS
- Lindfield PS
- Mowbray PS
- Naremburn School
- Pymble PS
- Roseville PS
- Royal North Shore Hospital School
- Sir Eric Woodward Memorial School
- St Ives HS
- St Ives North PS
- St Ives Park PS
- St Ives PS
- Turramurra HS
- Turramurra North PS
- Turramurra PS
- Wahroonga PS
- Warrawee PS
- West Pymble PS

Orange (672)

Western NSW Region
Level 1, 60-62 McNamara St
Orange 2800
Ph 02 6392 8400
Fax 02 6392 8445
Director: Pam Ryan

- Anson Street School
- Blayney HS
- Blayney PS
- Bletchington PS
- Borenore PS
- Bowen PS
- Calare PS
- Canobolas PS
- Canobolas Rural Technology HS
- Carcoar PS
- Clergate PS
- Cudal PS
- Cumnock PS
- Errowanbang PS
- Euchareena PS
- Glenroi Heights PS
- Lyndhurst PS
- Mandurama PS
- Manildra PS
- Millthorpe PS
- Molong Central
- Mullion Creek PS
- Nashdale PS
- Neville PS
- Newbridge PS
- Orange East PS
- Orange HS
- Orange PS
- Spring Hill PS
- Spring Terrace PS
- Trunkey PS

Peninsula Network (610)

Northern Sydney Region
72 Fisher Rd
Dee Why 2099
Ph 02 9941 3000
Fax 02 9941 3030
Director: Maurice Brunning

- Avalon PS
- Balgowlah Heights PS
- Barrenjoey HS
- Bilgola Plateau PS
- Brookvale PS
- Collaroy Plateau PS
- Cromer PS
- Curl Curl North PS
- Dee Why PS
- Elanora Heights PS
- Fisher Road School
- Harbord PS
- Manly Vale PS
- Manly Village PS
- Manly West PS
- Mona Vale PS
- Narrabeen Lakes PS
- Narrabeen North PS
- Narrabeen Sports HS
- Newport PS
- Northern Beaches Secondary College Administration Centre Freshwater
- Northern Beaches Secondary College Balgowlah Boys Campus
- Northern Beaches Secondary College Cromer Campus
- Northern Beaches Secondary College Freshwater Senior Campus
- Northern Beaches Secondary College Mackellar Girls Campus
- Northern Beaches Secondary College Manly Selective Campus
- Pittwater HS
- Royal Far West School
- Stewart House School
- Wheeler Heights PS

Penrith Valley (629)

Western Sydney Region
51 Henry St
Penrith 2750
Ph 02 4724 8799
Fax 02 4724 8777
Director: Daryl Jacobs

- Braddock PS
- Cambridge Gardens PS
- Cambridge Park HS
- Cambridge Park PS
- Claremont Meadows PS
- Cranebrook HS
- Glenmore Park HS
- Glenmore Park PS
- Henry Fulton PS
- Jamison HS
- Jamisontown PS
- Kingswood HS
- Kingswood Park PS
- Kingswood PS
- Kingswood South PS
- Kurrambee School
- Llandilo PS
- Luddenham PS
- Mulgoa PS
- Orchard Hills PS
- Penrith HS
- Penrith PS
- Penrith South PS
- Penrith Valley Learning Centre
- Putland School
- Regentville PS
- Samuel Terry PS
- Surveyors Creek PS
- Wallacia PS
- Werrington County PS
- Werrington PS
- York PS

Port Hacking (607)

Sydney Region
Cnr Kingsway & Sylva Ave
Miranda 2228
Ph 02 9531 3900
Fax 02 9531 3999
Director: Lynne Irvine

Bates Drive School
Botany Bay EEC
Bundeena PS
Burraneer Bay PS
Caringbah HS
Caringbah North PS
Caringbah PS
Cronulla HS
Cronulla PS
Cronulla South PS
Endeavour Sports HS
Grays Point PS
Gymea Bay PS
Gymea North PS
Kurnell PS
Laguna Street PS
Lilli Pilli PS
Minerva School
Miranda North PS
Miranda PS
Observatory Hill EEC
Port Hacking HS
Royal National Park EEC
Sans Souci PS
Sylvania Heights PS
Sylvania HS
Sylvania PS
Woolooware HS
Woolooware PS
Yowie Bay PS

Port Jackson (601)

Sydney Region
5 Wellington St
Bondi 2026
Ph 02 9298 6900
Fax 02 9298 6940
Director: Pam Peelgrane

Abbotsford PS
Annandale PS
Balmain PS
Birchgrove PS
Bondi Beach PS
Bondi PS
Conservatorium HS
Darlinghurst PS
Dobroyd Point PS
Drummoyne PS
Five Dock PS
Fort Street PS
Haberfield PS
Kegworth PS
Leichhardt PS
Nicholson Street PS
Orange Grove PS
Plunkett Street PS
Rozelle PS
Russell Lea Infants
Sydney Boys HS
Sydney Girls HS
Sydney Secondary College Balmain
Sydney Secondary College Blackwattle Bay
Sydney Secondary College Leichhardt
Vaucluse PS
Wairoa School
Waverley PS
Woollahra PS

Queanbeyan (664)

Illawarra and South East Region
Queanbeyan Office
Level 1, 24-36 Morisset St
Queanbeyan 2620
Ph 02 6200 5000
Fax 02 6299 0412
Director: Paul Greer

Berinba PS
Bigga PS
Binda PS
Boorowa Central
Bowning PS
Breadalbane PS
Bungendore PS
Captains Flat PS
Collector PS
Crookwell HS
Crookwell PS
Dalton PS
Five Mile Tree PS
Gundaroo PS
Gunning PS
Jerrabomberra PS
Karabar HS
Laggan PS
Michelago PS
Queanbeyan East PS
Queanbeyan HS
Queanbeyan PS
Queanbeyan South PS
Queanbeyan West PS
Reids Flat PS
Rugby PS
Rye Park PS
Sutton PS
Tarago PS
Taralga PS
Tirranna PS
Wee Jasper PS
Windellama PS
Yass HS
Yass PS

Richmond Valley (634)

North Coast Region
154 Ballina Rd
Goonellabah 2480
Ph 02 6623 5900
Fax 02 6623 5917
Director: Anne Riddell

Afterlee PS
Barkers Vale PS
Bonalbo Central
Broadwater PS
Casino HS
Casino PS
Casino West PS
Collins Creek PS
Doubtful Creek PS
Drake PS
Ellangowan PS
Evans River Community School
Grevillia PS
Kyogle HS
Kyogle PS
Leeville PS
Mallanganee PS
Manifold PS
Mummulgum PS
Old Bonalbo PS
Rappville PS
Rukenvale PS
Stratheden PS
Tabulam PS
The Risk PS
Urbenville PS
Wiangaree PS
Woodburn PS
Woodenbong Central

Riverina Central (660)

Riverina Region
Level 2, 76 Morgan St
Wagga Wagga 2650
Ph 02 6937 3800
Fax 02 6937 3899
Director: Wayne Parkins

Ariah Park Central
Barmedman PS
Billabong HS
Collingullie PS
Coolamon Central
Culcairn PS
Eurongilly PS
Ganmain PS
Henty PS
Holbrook PS
Illabo PS
Junee HS
Junee North PS
Junee PS
Lockhart Central
Marrar PS
Milbrulong PS
North Wagga PS
Pleasant Hills PS
Rand PS
South Wagga PS
Stockinbingal PS
Temora HS
Temora PS
Temora West PS
Wagga Wagga HS
Wagga Wagga PS
Yerong Creek PS

Riverina East (661)

Riverina Region
Level 4, 76 Morgan St
Wagga Wagga 2650
Ph 02 6937 3835
Fax 02 6921 9651
Director: Peter Brabin

Adelong PS
Batlow Technology School
Bongongo PS
Brungle PS
Cabramurra PS
Forest Hill PS
Franklin PS
Gadara School
Gundagai HS
Gundagai PS
Gundagai South PS
Humula PS
Jugiong PS
Khancoban PS
Kooringal HS
Kooringal PS
Lake Albert PS
Nangus PS
Riverina EEC
Rosewood PS
Shepherds Park School
Sturt PS
Talbingo PS
Tumbarumba HS
Tumbarumba PS
Tumut HS
Tumut PS
Willans Hill School

Riverina North (662)

Riverina Region
Level 4, 76 Morgan St
Wagga Wagga 2650
Ph 02 6937 3835
Fax 02 6921 9651
Director: Sandra Clifford

Ashmont PS
Bendick Murrell PS
Binalong PS
Bribbaree PS
Cootamundra HS
Cootamundra PS
E A Southee PS
Galong PS
Greenethorpe PS
Kapooka PS
Ladysmith PS
Maimuru PS
Mangoplah PS
Monteagle PS
Mount Austin HS
Mount Austin PS
Murringo PS
Murrumburrah HS
Murrumburrah PS
Tarcutta PS
The Bidgee School
The Rock Central
Tolland PS
Turvey Park PS
Uranquinty PS
Wallendbeen PS
Wombat PS
Young HS
Young North PS
Young PS

Riverina North West (659)

Riverina Region
104-110 Banna Ave
Griffith 2680
Ph 02 6961 8100
Fax 02 6964 1386
Director: Geoff Pellizzer

Ardlethan Central
Barellan Central
Beckom PS
Binya PS
Burcher PS
Darlington Point PS
Euabalong West PS
Goolgowi PS
Griffith HS
Griffith PS
Hanwood PS
Hillston Central
Kalinda School
Lake Cargelligo Central
Lake Wyangan PS
Naradhan PS
Rankins Springs PS
Tallimba PS
Tharbogang PS
Tullibigeal Central
Ungarie Central
Weethalle PS
West Wyalong HS
West Wyalong PS
Wyalong PS

Riverina South (656)

Riverina Region
521 Macauley St
Albury 2640
Ph 02 6051 4300
Fax 02 6041 3258
Director: Peter Smith

Albury HS
Albury North PS
Albury PS
Albury West PS
Balldale PS
Brocklesby PS
Burrumbuttock PS
Corowa HS
Corowa PS
Corowa South PS
Gerogery PS
Glenroy PS
Howlong PS
Hume PS
James Fallon HS
Jindera PS
Kandeer School
Lavington East PS
Lavington PS
Lowesdale PS
Mullengandra PS
Mulwala PS
Murray HS
Savernake PS
Springdale Heights PS
Table Top PS
Thurgoona PS
Walbundrie PS
Walla Walla PS
Wewak Street School

Riverina South West (657)

Riverina Region
Harfleur St
Deniliquin 2710
Ph 03 5898 3700
Fax 03 5881 5851
Director: Vicki Kempton

Balranald Central
Barham HS
Barham PS
Barooga PS
Berrigan PS
Blighty PS
Bunnaloo PS
Clare PS
Conargo PS
Deniliquin HS
Deniliquin North PS
Deniliquin South PS
Edward PS
Finley HS
Finley PS
Jerilderie PS
Mallan PS
Mathoura PS
Mayrung PS
Moama PS
Moulamein PS
Oaklands Central
Tocumwal PS
Tooleybuc Central
Wakool PS

Riverina West (658)

Riverina Region
104-110 Banna Ave
Griffith 2680
Ph 02 6961 8100
Fax 02 6964 1386
Director: John Dowling

Beelbangera PS
Bilbul PS
Booligal PS
Boree Creek PS
Carrathool PS
Coleambally Central
Gralee School
Griffith East PS
Griffith North PS
Grong Grong PS
Hay PS
Hay War Memorial HS
Leeton HS
Leeton PS
Matong PS
Murrami PS
Narrandera East Infant
Narrandera HS
Narrandera PS
Parkview PS
Urana Central
Wade HS
Wamoon PS
Whitton PS
Yanco Agricultural HS
Yanco PS
Yenda PS
Yoogali PS

Sapphire Coast/Monaro (665)

Illawarra and South East Region
Suite 15A Citi Centre
Orient St Batemans Bay 2536
Ph 02 4475 3300
Fax 02 4475 3340
Director: Bob Aston

Adaminaby PS
Ando PS
Bega HS
Bega PS
Bega West PS
Bemboka PS
Berridale PS
Bibbenluke PS
Bombala HS
Bombala PS
Bournda EEC
Bredbo PS
Candelo PS
Cobargo PS
Cooma North PS
Cooma PS
Dalgety PS
Delegate PS
Eden Marine HS
Eden PS
Jerangle PS
Jindabyne Central
Merimbula PS
Monaro HS
Nimmitabel PS
Numeralla PS
Pambula PS
Quaama PS
Tanja PS
Tathra PS
Towamba PS
Wolumla PS
Wyndham PS

Shellharbour (667)

Illawarra and South East Region
Shellharbour Office
Cnr Shellharbour & Lake
Entrance Rds Warilla 2528
Ph 02 4251 9900
Fax 02 4251 9945
Director: Phil Hirst

Albion Park HS
Albion Park PS
Albion Park Rail PS
Balarang PS
Barrack Heights PS
Dapto HS
Dapto PS
Flinders PS
Hayes Park PS
Illawarra EEC
Kanahooka HS
Koonawarra PS
Lake Illawarra HS
Lake Illawarra South PS
Lakelands PS
Mount Brown PS
Mount Terry PS
Mount Warrigal PS
Oak Flats HS
Oak Flats PS
Peterborough School
Primbee PS
Shell Cove PS
Shellharbour PS
Tullimbar PS
Warilla HS
Warilla North PS
Warilla PS
Windang PS

Shoalhaven (670)

Illawarra and South East Region
Shellharbour Office
Cnr Shellharbour & Lake
Entrance Rds Warilla 2528
Ph 02 4251 9900
Fax 02 4251 9945
Director: John Hambly

Berry PS
Bomaderry HS
Bomaderry PS
Callala PS
Cambewarra PS
Culburra PS
Falls Creek PS
Gerringong PS
Greenwell Point PS
Havenlee School
Illaroo Road PS
Jamberoo PS
Kangaroo Valley PS
Kiama HS
Kiama PS
Minnamurra PS
North Nowra PS
Nowra East PS
Nowra HS
Nowra Hill PS
Nowra PS
Shoalhaven Heads PS
Shoalhaven HS
Terara PS

Southern Cross (633)

North Coast Region
Level 2, 12 King St
Murwillumbah 2484
Ph 02 6670 2300
Fax 02 6672 5192
Director: Greg Cloak

Alstonville HS
Alstonville PS
Ballina HS
Ballina PS
Bangalow PS
Brunswick Heads PS
Byron Bay HS
Byron Bay PS
Cabbage Tree Island PS
Coorabell PS
Durrumbul PS
Empire Vale PS
Fernleigh PS
Goonengerry PS
Lennox Head PS
Main Arm Upper PS
Mullumbimby HS
Mullumbimby PS
Newrybar PS
Norfolk Island Central
Ocean Shores PS
Pearces Creek PS
Rous PS
Southern Cross School
Teven-Tintenbar PS
The Pocket PS
Tregeagle PS
Wardell PS
Wilsons Creek PS
Wollongbar PS

Strathfield (623)

South Western Sydney Region
65 Albert Rd
Strathfield 2135
Ph 02 9582 6300
Fax 02 9582 6340
Director: Diane Dunn

Belmore Boys HS
Belmore North PS
Belmore South PS
Burwood PS
Campsie PS
Canterbury Vale School
Chalmers Road School
Concord HS
Concord PS
Concord West PS
Enfield PS
Hampden Park PS
Harcourt PS
Homebush Boys HS
Homebush PS
Homebush West PS
Lakemba PS
Lucas Gardens School
Mortlake PS
Newington PS
Punchbowl Boys HS
Punchbowl PS
Rivendell School
Strathfield Girls HS
Strathfield North PS
Strathfield South HS
Strathfield South PS
Wangee Park School
Wiley Park Girls HS
Wiley Park PS

The Hills (628)

Western Sydney Region
Nirimba Bldg T3C
Eastern Rd Quakers Hill 2763
Ph 02 9208 7611
Fax 02 9208 7635
Director: Dennis MacKenzie

Baulkham Hills HS
Beaumont Hills PS
Caddies Creek PS
Crestwood HS
Crestwood PS
Darcy Road PS
Excelsior PS
Girraween HS
Glenwood HS
Ironbark Ridge PS
Jasper Road PS
John Palmer PS
Kellyville HS
Kellyville PS
Kellyville Ridge PS
Matthew Pearce PS
Model Farms HS
Northmead HS
Northmead PS
Parklea PS
Pendle Hill HS
Rouse Hill PS
Sherwood Ridge PS
Tallowood School
The Hills School
Toongabbie East PS
Toongabbie PS
Toongabbie West PS
Wentworthville PS
Westmead PS
Winston Heights PS
Winston Hills PS

The Wilson (635)

North Coast Region
154 Ballina Rd
Goonellabah 2480
Ph 02 6623 5900
Fax 02 6623 5917
Director: Toni Hughes

Albert Park PS
Bexhill PS
Blakebrook PS
Caniaba PS
Clunes PS
Coffee Camp PS
Coraki PS
Corndale PS
Dorroughby EEC
Dunoon PS
Eltham PS
Eureka PS
Goolmangar PS
Goonellabah PS
Jiggi PS
Kadina HS
Larnook PS
Lismore Heights PS
Lismore HS
Lismore PS
Lismore South PS
Modanville PS
Nimbin Central
Richmond River HS
Rosebank PS
The Channon PS
Tuntable Creek PS
Upper Coopers Creek PS
Whian Whian PS
Wilson Park School
Wyrallah PS
Wyrallah Road PS

Warrumbungle (673)

Western NSW Region
Level 2, 37 Carrington Ave
Dubbo 2830
Ph 02 6883 6300
Fax 02 6884 3787
Director: Michael Cronk

Baradine Central
Binnaway Central
Bylong Upper PS
Carinda PS
Coolah Central
Coonabarabran HS
Coonabarabran PS
Coonamble HS
Coonamble PS
Cudgegong Valley PS
Dunedoo Central
Gilgandra HS
Gilgandra PS
Glen Alice PS
Goolma PS
Gulargambone Central
Gulgong HS
Gulgong PS
Gwabegar PS
Hargraves PS
Hill End PS
Ilford PS
Kandos HS
Kandos PS
Lue PS
Mendooran Central
Mudgee HS
Mudgee PS
Quambone PS
Rylstone PS
Tooraweenah PS
Ulan PS
Windeyer PS
Wollar PS

Wollongong (668)

Illawarra and South East Region
414-416 Crown St
West Wollongong 2500
Ph 02 4224 9200
Fax 02 4224 9247
Director: David Phipps

Berkeley PS
Berkeley South PS
Berkeley West PS
Cringila PS
Farmborough Road PS
Figtree Heights PS
Figtree HS
Figtree PS
Illawarra Hospital School
Illawarra Senior College
Illawarra Sports HS
John Richardson School
Kemblawarra PS
Lake Heights PS
Lindsay Park PS
Mount Keira PS
Mount Kembla PS
Mount St Thomas PS
Nareena Hills PS
Port Kembla PS
Smiths Hill HS
Unanderra PS
Warrawong HS
Warrawong PS

Wollongong North (669)

Illawarra and South East Region
414-416 Crown St
West Wollongong 2500
Ph 02 4224 9200
Fax 02 4224 9247
Director: Graham Kahabka

Austinmer PS
Balgownie PS
Bellambi PS
Bulli HS
Bulli PS
Coledale PS
Coniston PS
Corrimal East PS
Corrimal HS
Corrimal PS
Fairy Meadow PS
Gwynneville PS
Helensburgh PS
Keira HS
Keiraville PS
Mount Ousley PS
Otford PS
Para Meadows School
Pleasant Heights PS
Russell Vale PS
Scarborough PS
Stanwell Park PS
Tarrawanna PS
Thirroul PS
Towradgi PS
Waniora PS
Wollongong HS of the Performing Arts
Wollongong PS
Wollongong West PS
Woonona East PS
Woonona HS
Woonona PS

Woronora River (600)

Sydney Region
Cnr Kingsway & Sylva Ave
Miranda 2228
Ph 02 9531 3900
Fax 02 9531 3999
Director: Jim Ironside

Alfords Point PS
Bangor PS
Bonnet Bay PS
Como PS
Como West PS
Engadine HS
Engadine PS
Engadine West PS
Heathcote East PS
Heathcote HS
Heathcote PS
Illawong PS
Jannali East PS
Jannali PS
Kareela PS
Kirrawee HS
Kirrawee PS
Loftus PS
Lucas Heights Community School
Marton PS
Menai HS
Menai PS
Oyster Bay PS
Sutherland North PS
Sutherland PS
Tharawal PS
The Jannali HS
Waterfall PS
Woronora River PS
Yarrawarrah PS

TAFE NSW has 10 Institutes providing vocational education and training in over 2,000 course areas across the State. The Open Training and Education Network (OTEN) is part of Western Sydney Institute. Each Institute is responsible for the colleges/ campuses within its region. The Institutes are responsive to their local business, industry and community needs.

TAFE NSW website

www.tafensw.edu.au

TAFE NSW Information Centre

Level 13, 1 Oxford St (Locked Bag 53) Darlinghurst 2010
Ph 131 601 Fax 02 9283 4674
Ph 02 8289 4777 for customers calling outside NSW
Telephone Typewriter for people who are hearing impaired Ph 02 8289 4703

TAFE NSW – Hunter Institute

Institute Director's Unit
Maitland Rd Tighes Hill 2297
(Locked Bag 45 Hunter Region Mail Centre 2310)
Ph 02 4923 7567 Fax 02 4923 7711
Institute Director: Phil Cox

Belmont Campus
647 Pacific Highway (PO Box 479) Belmont) 2280
Ph 02 4979 6100 Fax 02 4979 6222

Cessnock Campus
Darwin St (PO Box 366) Cessnock 2325
Ph 02 4993 0400 Fax 02 4993 0442

Glendale Campus
Frederick St (PO Box 138) Cardiff 2285
Ph 02 4979 1600 Fax 02 4979 1666

Gosford Campus
Corner Henry Parry Dr & Margin St (Locked Bag 23) Gosford 2250
Ph 02 4348 2222 Fax 02 4325 7976

Hamilton Campus
91 Parry St (Locked Bag 29 Hamilton DC 2303) Newcastle West 2302
Ph 02 4969 9411 Fax 02 4961 5344

Hunter Street Campus
590–608 Hunter St (PO Box 3267 Hamilton DC 2303) Newcastle West 2302
Ph 02 4925 2344 Fax 02 4929 0325

Kurri Kurri Campus
Heddon St (PO Box 135) Kurri Kurri 2327
Ph 02 4936 0300 Fax 02 4936 0360

Maitland Campus
Cnr Ferraby Dr & New England Highway Metford 2323
(PO Box 104 East Maitland 2323)
Ph 02 4930 2888 Fax 02 4933 8955

Muswellbrook Campus
59 Maitland St (PO Box 375) Muswellbrook 2333
Ph 02 6542 1100 Fax 02 6543 4865

Newcastle Campus
Maitland Rd Tighes Hill 2297
(Locked Bag 45 Hunter Regional Mail Centre 2310)
Ph 02 4923 7222 Fax 02 4923 7779

Ourimbah Campus
10 Chittaway (PO Box 127) Ourimbah 2258
Ph 02 4348 4030 Fax 02 4348 4035

Scone Campus
Cnr Bunnan & Racecourse Rds (PO Box 292) Scone 2337
Ph 02 6540 3200 Fax 02 6545 2958

Singleton Campus
York St (PO Box 174) Singleton 2330
Ph 02 6578 7100 Fax 02 6578 7188

Tomaree Education Centre
Salamander Way Salamander Bay 2317
(PO Box 710 Nelson Bay 2315)
Ph 02 4981 1444 Fax 02 4984 1251

Wyong Campus
Porter St (PO Box 486) Wyong 2259
Ph 02 4350 2222 Fax 02 4350 2247

TAFE NSW – Illawarra Institute

Institute Director's Office
3 Rowland Avenue (PO Box 1228) Wollongong 2500
Ph 02 4222 2908 Fax 02 4226 4748
Institute Director: Dianne Murray

Bega Campus
Barrack St (PO Box 689) Bega 2550
Ph 02 6492 9700 Fax 02 6492 3304

Cooma Campus
66 Commissioner St (PO Box 777) Cooma 2630
Ph 02 6452 0799 Fax 02 6452 0755

Dapto Campus
Fowlers Rd (PO Box 183) Dapto 2530
Ph 02 4221 8900 Fax 02 4221 8907

Goulburn Campus
Cnr Verner & View Sts (PO Box 240) Goulburn 2580
Ph 02 4823 1800 Fax 02 4821 8706

Moruya Campus
Princes Highway (PO Box 88) Moruya 2537
Ph 02 4474 1800 Fax 02 4474 1888

Moss Vale Campus
Kirkham St (PO Box 212) Moss Vale 2577
Ph 02 4868 0111 Fax 02 4868 2537

Nowra Campus
60 Beinda St (PO Box 225 Nowra 2541) Bomaderry 2541
Ph 02 4421 9888 Fax 02 4421 9804

Queanbeyan Campus
Cnr Buttle & Macquoid Sts (PO Box 436)
Queanbeyan 2620
Ph 02 6299 1377 Fax 02 6299 1738

Shellharbour Campus
Lake Entrance Rd (PO Box 78 ShellharbourSquare 2529)
Warilla 2528
Ph 02 4295 2200 Fax 02 4295 2272

Ulladulla Campus
156 Green St (PO Box 131 Milton 2538) Ulladulla 2539
Ph 02 4455 3866 Fax 02 4455 4945

Wollongong Campus
Foleys Rd (PO Box 1223) Wollongong 2500
Ph 02 4229 0400 Fax 02 4229 0626

Wollongong West Campus
36 Gladstone Ave (PO Box 1228) Wollongong 2500
Ph 02 4222 2800 Fax 02 4222 2881

Yallah Campus
Marshall Mount Rd (PO Box 381 Dapto) Yallah 2530
Ph 02 4261 3744 Fax 02 4261 8259

Yass Campus
51 Church St (PO Box 368) Yass 2582
Ph 02 6226 1556 Fax 02 6226 2156

TAFE NSW – New England Institute

Institute Director's Office
Janison St Tamworth 2340
Ph 02 6768 2445 Fax 02 6768 2449
Institute Director: Gary Pollock

Armidale Campus
Beardy St Armidale 2350
Ph 02 6773 7700 Fax 02 6772 8792

Boggabilla Campus
Cnr Merriwa & South Sts Boggabilla 2409
Ph 07 4676 9900 Fax 07 4676 9940

Coonabarabran Campus
16 Robertson St Coonabarabran 2357
Ph 02 6842 0700 Fax 02 6842 0710
Flexilink New England
External Studies Unit, Customer Service Centre
Janison St Tamworth 2340
Ph 1800 448 176 Fax 02 6768 2469

Glen Innes Campus
Grey St Glen Innes 2370
Ph 02 6739 0500 Fax 02 6739 0581

Gunnedah Campus
Hunter St Gunnedah 2380
Ph 02 6742 9600 Fax 02 6742 3119

Inverell Campus
Evans St Inverell 2360
Ph 02 6721 9000 Fax 02 6721 9011

Moree Campus
22 Frome St Moree 2400
Ph 02 6752 0300 Fax 02 6752 0310

Narrabri Campus
87 Barwan St Narrabri 2390
Ph 02 6792 8800 Fax 02 6792 8809

Quirindi Campus
Cnr Henry & East Sts Quirindi 2343
Ph 02 6746 4100 Fax 02 6746 4110

Tamworth Campus
Janison St Tamworth 2340
Ph 02 6768 2200 Fax 02 6768 2206

Tenterfield Campus
High St Tenterfield 2372
Ph 02 6736 0000 Fax 02 6736 0010

TAFE NSW – North Coast Institute

Institute Director's Office
Lower Ground Floor, Block G, Port Macquarie Campus,
Hindman St (PO Box 528) Port Macquarie 2444
Ph 02 6586 2212 Fax 02 6586 2344
Institute Director: Elizabeth McGregor

Ballina Campus
154 Burnet St Ballina 2478
Ph (02) 6681 8900 Fax 02 6686 2580

Casino Campus
144 Barker St (PO Box 442) Casino 2470
Ph 02 6661 2000 Fax 02 6662 2173

Coffs Harbour Campus
Glenreagh St Coffs Harbour 2450
Ph 02 6648 2400 Fax 02 6648 2599

Coffs Harbour Education Campus
Hogbin Dr Coffs Harbour 2450
Ph 02 6659 3000 Fax 02 6659 3071
Grafton Campus
Clarence St (PO Box 103) Grafton 2460
Ph 02 6641 1600 Fax 02 6641 1799

Great Lakes Campus
The Northern Parkway (PO Box 61) Tuncurry 2428
Ph 02 6555 0600 Fax 02 6557 5299

Kempsey Campus
58 Sea St (PO Box 173) West Kempsey 2440
Ph 02 6560 2900 Fax 02 6562 7415

Kingscliff Campus
Cudgen Road Kingscliff 2487
Ph 02 6674 7200 Fax 02 6674 7399

Lismore Campus
Conway St (PO Box 569) Lismore 2480
Ph 02 6623 0200 Fax 02 6623 0399

Macksville Campus
5–9 West St (PO Box 15) Macksville 2447
Ph 02 6569 2000 Fax 02 6568 2260

Maclean Campus
Wombah St (PO Box 252) Maclean 2463
Ph 02 6603 5000 Fax 02 6645 4252

Murwillumbah Campus
Murwillumbah St (PO Box 92) Murwillumbah 2484
Ph 02 6672 0800 Fax 02 6672 0805

Port Macquarie Campus
Widderson St (PO Box 210) Port Macquarie 2444
Ph 02 6581 6200 Fax 02 6583 6478

Taree Campus
Montgomery Cr (PO Box 669) Taree 2430
Ph 02 6591 3600 Fax 02 6591 3799

Trenayr Campus
Trenayr Rd (Locked Bag 5) Junction Hill 2460
Ph 02 6644 4700 Fax 02 6644 7767

Wauchope Campus
Young St (PO Box 145) 2446
Ph 02 6586 9500 Fax 02 6586 9599

Wollongbar Campus
Sneaths Rd (PO Box 534) Wollongbar 2477
Ph 02 6620 4700 Fax 02 6620 4299

TAFE NSW – Northern Sydney Institute

Institute Director's Office
Level 1, Building C, 213 Pacific Highway
St Leonards 2065
Ph 02 9942 0504 Fax 02 9942 0508
Institute Director: Kevin Harris

Bradfield Senior College
192 Pacific Highway Crows Nest 2065
Ph 131 674 Fax 02 9448 4208

Crows Nest College
149 West St Crows Nest 2065
Ph 131 674 Fax 02 9448 4451

Hornsby College
205 Pacific Highway Hornsby 2077
Ph 131 674 Fax 02 9472 1697

Meadowbank College
See St Meadowbank 2114
Ph 131 674 Fax 02 9942 3555

North Sydney College
213 Pacific Highway St Leonards 2065
Ph 131 674 Fax 02 9942 0011

Northern Beaches College
154 Old Pittwater Rd Brookvale 2100
Ph 131 674 Fax 02 9941 5220

North Sydney Institute Training Solutions (TAFE PLUS)
213 Pacific Highway St Leonards 2065
Ph 131 674 Fax 02 9942 0571

North Sydney Institute International Students Office
139 West St Crows Nest 2065
Ph 131 674 Fax 02 9448 4498

Ryde College
250 Blaxland Rd Ryde 2112
(Vehicular entrance via 59 Parkes Street)
Ph 131 674 Fax 02 9448 6291

TAFE English Language Centre
149 West St Crows Nest 2065
Ph 02 9942 0069 Fax 02 9448 4477

TAFE NSW – Riverina Institute

Institute Director's Office
Cnr Macleay & Coleman Sts (PO Box 2231)
Wagga Wagga 2650
Ph 02 6938 1444 Fax 02 6938 1445
Institute Director: Rosemary Campbell

Albury Campus
Poole St (PO Box 515) Albury 2640
Ph 02 6058 2800 Fax 02 6021 5816

Coomealla Campus
Silver City Highway (PO Box 343) Dareton 2717
Ph 03 5019 8700 Fax 03 5027 4812

Cootamundra Campus
Mackay St (PO Box 200) Cootamundra 2590
Ph 02 6940 1000 Fax 02 6942 3265

Corowa Campus
Cnr Murray & Reisling Sts (PO Box 222) Corowa 2646
Ph 02 6033 7400 Fax 02 6033 2955

Deniliquin Campus
Cnr Poictiers & Macauley Sts (PO Box 739) Deniliquin 2710
Ph 03 5882 2000 Fax 03 5881 1975

Finley Campus
60–68 Denison St (PO Box 367) Finley 2713
Ph 03 5883 9700 Fax 03 5883 1938

Griffith Campus
Neville Place (PO Box 1000) Griffith 2680
Ph 02 6962 0444 Fax 02 6962 0408

RI@Hay
178-182 Lachlan St Hay 2711
Ph 02 6993 1330 Fax 02 6993 4041

Lake Cargelligo Campus
Yelkin St (PO Box 179) Lake Cargelligo 2672
Ph 02 6898 0100 Fax 02 6898 1238

Leeton Campus
Palm Ave Leeton 2705
Ph 02 6953 9600 Fax 02 6953 4552

Narrandera Campus
54–68 Elwin St (PO Box 27) Narrandera 2700
Ph 02 6959 5400 Fax 02 6959 2850

National Aerospace Training Centre of Excellence
Bldg 57, RAAF Base (PO Box 147 Forest Hill 2651)
Wagga Wagga 2650
Ph 02 6937 4898 Fax 02 6937 4885

National Environment Centre
Ettamogah Rd (PO Box 827 Albury 2640) Thurgoona 2641
Ph 02 6043 6700 Fax 02 6043 6721

Primary Industries Centre
Coolamon Rd (PO Box 2144 Wagga Wagga 2650)
North Wagga 2650
Ph 02 6939 5000 Fax 02 6921 1416

Temora Campus
111 Gloucester St (PO Box 132) Temora 2666
Ph 02 6977 3700 Fax 02 6977 2057

Tumut Campus
Cnr Capper & Howick Sts (PO Box 207) Tumut 2720
Ph 02 6981 4800 Fax 02 6947 3177

Wagga Wagga Campus
Cnr Macleay & Coleman Sts (PO Box 2231)
Wagga Wagga 2650
Ph 02 6938 1300 Fax 02 6938 1327

West Wyalong Campus
86 Wootten St West Wyalong 2671
Ph 02 6979 0800 Fax 02 6972 3489

Young Campus
Caple St (PO Box 1180) Young 2594
Ph 02 6382 8500 Fax 02 6382 3760

TAFE NSW – South Western Sydney Institute

Institute Director's Office
Building A, 500 Chapel Rd Bankstown 2200
Ph 02 9796 5400 Fax 02 9790 7353
Institute Director: Barry Peddle

Bankstown College
500 Chapel Rd Bankstown 2200
Ph 02 9780 5500 Fax 02 9708 6470

Campbelltown College
Narellan Rd (PO Box 599) Campbelltown 2560
Ph 02 4620 1700 Fax 02 4620 1752

Granville College
136 William St Granville 2142
Ph 02 9682 0222 Fax 02 9682 0437

Lidcombe College
East St Lidcombe 2141
Ph 02 9643 4500 Fax 02 9643 4699

Liverpool College
College St Liverpool 2170
Ph 02 9827 5100 Fax 02 9827 5200

Macquarie Fields College
Victoria Rd Macquarie Fields 2564
Ph 02 9605 6100 Fax 02 9605 9856

Miller College
Cnr Hoxton Park & Banks Rds Miller 2168
Ph 02 8784 3000 Fax 02 9825 7200

Padstow College
Raine Rd Padstow 2211
Ph 02 9722 5399 Fax 02 9722 5454

Wetherill Park College
The Horsley Drive Wetherill Park 2164
Ph 02 9609 9211 Fax 02 9725 5028

TAFE NSW – Sydney Institute

Institute Director's Office
Level 1, Building A, Mary Ann St Ultimo 2007
Ph 02 9217 3367 Fax 02 9217 4023
Institute Director: Pam Christie

Design Centre Enmore
110 Edgeware Rd Enmore 2042
Ph 1300 360 601 Fax 02 9394 5757
English Language Centre (SITEC)
Mary Ann St Ultimo 2007
Ph 02 9217 4818 Fax 02 9217 4063

Eora College
333 Abercrombie St Chippendale 2008
Ph 1300 360 601 Fax 02 9217 4072

Petersham College
27 Crystal St Petersham 2049
Ph 1300 360 601 Fax 02 9335 2600

Randwick College
Cnr Darley Rd & King St Randwick 2031
Ph 1300 360 601 Fax 02 9469 8767

St George College
Cnr President Ave & Princes Highway Kogarah 2217
Ph 02 9598 6200 Fax 02 9587 2629

Sutherland College - Gymea Campus
Cnr Hotham Rd & The Kingsway Gymea 2227
Ph 02 9710 5000 Fax 02 9710 5026

Sutherland College - Loftus Campus
Rawson Ave Loftus 2232
Ph 02 9710 5800 Fax 02 9710 5801

Ultimo College
695 – 731 Harris St Ultimo 2007
Ph 1300 360 601 Fax 02 9217 4025

TAFE NSW – Western Institute

Institute Director's Office
Level 1, 235 Lords Place Orange 2800
Ph 02 6393 5900 Fax(02) 6393 5969
Institute Director: Adrian Mitchell

Bathurst Campus
Panorama Ave (PO Box 143) Bathurst 2795
Ph 02 6338 2424 Fax 02 6338 2439

Bourke Campus
Oxley St (PO Box 510) Bourke 2840
Ph 02 6872 2287 Fax 02 6872 3052

Brewarrina Campus
Bourke St (PO Box 213) Brewarrina 2839
Ph 02 6839 2433 Fax 02 6839 2473

Broken Hill Campus
248 Argent St Broken Hill 2880
Ph 08 8082 6888 Fax 08 8087 5264

Cobar Campus
45 Bathurst St Cobar 2835
Ph 02 6836 2399 Fax 02 6836 3081

Condobolin Campus
Cnr Turner & High Sts (PO Box 155) Condobolin 2877
Ph 02 6895 3133 Fax 02 6895 2087

Coonamble Campus
Dubbo St (PO Box 200) Coonamble 2829
Ph 02 6822 1344 Fax 02 6822 1494

Cowra Campus
27–33 Carleton St Cowra 2794
Ph 02 6340 1700 Fax 02 6342 4128

Dubbo Campus
Myall St (PO Box 787) Dubbo 2830
Ph 02 6883 3444 Fax 02 6883 3466

Dunedoo Campus
Digilah St (PO Box 6) Dunedoo 2844
Ph 02 6370 3300 Fax 02 6370 3303

Forbes Campus
Cnr Browne & Harold Sts (PO Box 145) Forbes 2871
Ph 02 6853 9100 Fax 02 6853 9111

Gilgandra Campus
Wamboin St (PO Box 48) Gilgandra 2827
Ph 02 6847 2028 Fax 02 6847 1257

Grenfell Campus
Cnr Rose & East Sts Grenfell 2810
Ph 02 6343 1786 Fax 02 6343 1733

Lightning Ridge Campus
Kaolin St (PO Box 498) Lightning Ridge 2834
Ph 02 6829 1502 Fax 02 6829 1505

Lithgow Campus
2 Hill St (PO Box 297) Lithgow 2790
Ph 02 6352 0444 Fax 02 6352 0466

Menindee Campus
Bear St Menindee 2880
Ph 08 8091 4148 Fax 08 8087 5264
Or through Broken Hill Campus

Mudgee Campus
Cassilis Rd (PO Box 297) Mudgee 2850
Ph 02 6378 2620 Fax 02 6378 2685

Nyngan Campus
Cobar St (PO Box 69) Nyngan 2825
Ph 02 6832 1883 Fax 02 6832 2532

Orange Campus
March St (PO Box 1059) Orange 2800
Ph 02 6391 5777 Fax 02 6391 5613

Parkes Campus
25 Bushman St Parkes 2870
Ph 02 6862 8100 Fax 02 6862 2999

Walgett Campus
Arthur St (PO Box 186) Walgett 2832
Ph 02 6828 6200 Fax 02 6828 6296

Warren Campus
Burton St (PO Box 174) Warren 2824
Ph 02 6847 4543 Fax 02 6847 3041

Wellington Campus
43 Maughan St (PO Box 92) Wellington 2820
Ph 02 6845 1844 Fax 02 6845 2780

Wilcannia Campus
Reid St (PO Box 23) Wilcannia 2836
Ph 08 8091 5974 Fax 08 8091 5081

TAFE NSW – Western Sydney Institute

Institute Director's Office
2-10 O'Connell St Kingswood 2747
Ph 02 9208 9202 Fax 02 9208 9277
Institute Director: Susan Hartigan

Baulkham Hills College
146–160 Old Northern Rd (cnr Edward St)
Baulkham Hills 2153
Ph 131 870 Fax 02 9865 1222

Blacktown College
Main Street Blacktown 2148
Ph 131 870 Fax 02 9208 1755

Blue Mountains College
Mitchell St Wentworth Falls 2782
Ph 131 870 Fax 02 4753 2050

Building Industry Skills Centre (BISC)
Cnr Showground & Green Rds Castle Hill 2154
Ph 131 870 Fax 02 9204 4699

Mount Druitt College
Cnr Mount St & North Parade Mount Druitt 2770
Ph 131 870 Fax 02 9208 6222

Nepean College
12–44 O'Connell St Kingswood 2747
Ph 131 870 Fax 02 9208 9293

Nirimba College
Eastern Rd (near cnr of Quakers Hill Parkway)
Quakers Hill 2763
Ph 131 870 Fax 02 9208 7010

Richmond College
Cnr Blacktown Rd & Campus Dr Richmond 2753
Ph 131 870 Fax 02 4570 9088
Sydney West International Education
117 Henry St Penrith 2750
Ph 131 870 Fax 02 4724 8289

Western Sydney Regional Corporate Services
2–10 O'Connell St Kingswood 2747
Ph 131 870 Fax 02 9208 9282

OTEN

(TAFE NSW – Western Sydney Institute)
51 Wentworth Rd Strathfield 2135
Ph 02 9715 8333 Fax 02 9715 8445
Associate Director: Ron Wright
Ph 02 9715 8135 Fax 02 9715 8811
Institute Director: Susan Hartigan

TAFE NSW Curriculum Centres

There are five Curriculum Centres that provide services in the development of educational programs and production of quality teaching and learning resources to assist in the delivery of vocational education and training. Four are based on industry groupings and the fifth is for access and general education. Each is located in a TAFE NSW Institute and is responsible to the General Manager Business, TAFE and Community Education.

Access & General Education Curriculum Centre

(TAFE NSW – South Western Sydney Institute)

68 South St, Granville NSW 2142
(PO Box 357 Granville NSW 2142)
Ph 02 9846 8101 Fax 02 9846 8195
Associate Director Lindsay McGarity
Ph 02 9846 8194 Fax 02 9846 8148

Business, Arts & Information Technology Curriculum Centre

(TAFE NSW – Sydney Institute)

Level 1 & 2, The Muse
Cnr Mary Ann & Harris Sts Ultimo NSW 2007
(PO Box 707 Broadway NSW 2007)
Ph 02 9217 4400, 02 9217 4293
Fax 02 9217 4015, 02 9217 4044
Associate Director Robwyn Miller
Ph 02 9217 4433 Fax 02 9217 4071

Community Services, Health, Tourism and Recreation Curriculum Centre

(TAFE NSW – Northern Sydney Institute)

TAFE NSW - Meadowbank Campus
Level 3, Block J, See St Meadowbank NSW 2114
(Locked Bag 6, Meadowbank NSW 2114)
Ph 02 9942 3200 Fax 02 9942 3203
Associate Director Margaret Sullivan
Ph 02 9942 3201 Fax 02 9942 3257

Manufacturing, Engineering, Construction & Transport Curriculum Centre

(TAFE NSW – Western Sydney Institute)

Block E, Cnr Showground & Green Roads
Castle Hill NSW 2154
Ph 02 9204 4600 Fax 02 9204 4669
Associate Director Pauline Hart
Ph 02 9204 4610 Fax 02 9204 4668

Primary Industries & Natural Resources Curriculum Centre

(TAFE NSW – Western Institute)

Level 1, 60-62 McNamara St Orange NSW 2800
(PO Box 948, Orange NSW 2800)
Ph 02 6393 6900 Fax 02 6393 6982
Associate Director Peter Batten
Ph 02 6393 6916 Fax 02 6393 6982

Aboriginal Education Consultative Group

37 Cavendish St Stanmore NSW 2048
Ph 02 9550 5666 Fax 02 9550 3361
Email info@nswaecg.com.au
Web www.nswaecg.com.au

Australian Music Examinations Board NSW

Level 6 117 Clarence St Sydney NSW 2000
Ph 02 9367 8456 Fax 02 9367 8091
Email office@ameb.nsw.edu.au
Web www.ameb.nsw.edu.au

Catholic Education Commission NSW

Level 9 Polding Centre 133 Liverpool St
Sydney NSW 2000
(PO Box A169 Sydney South 1235)
Ph 02 9287 1555 Fax 02 9264 6308
Email commission@cecnsw.catholic.edu.au
Web www.cecnsw.catholic.edu.au

Federation of Parents and Citizens' Associations of New South Wales

41 Cowper Street Granville 2142
(Locked Bag 40 Granville 2142)
Ph 1300 885 982 Fax 1800 655 866
Email mail@pandc.org.au
Web www.pandc.org.au

Minister for Education and Training

Governor Macquarie Tower
Level 30, 1 Farrer Place Sydney NSW 2000
Ph: 02 9228 4777 Fax: 02 9228 4392
Email office@smos.nsw.gov.au
Web www.det.nsw.edu.au

New South Wales Teachers Federation

23-33 Mary St Surry Hills NSW 2010
(Locked Bag 3010 Darlinghurst 1300)
Ph 02 9217 2100 Fax 02 9217 2470
Free call 1300 654 369
Email mail@nswtf.org.au
Web www.nswtf.org.au

NSW Institute of Teachers

Level 10, 175 Castlereagh St
Sydney NSW 2000
(PO Box A976 Sydney Sth NSW 1235)
Ph 1300 739 338 Fax 02 9268 6313
Email contactus@nswteachers.nsw.edu.au
Web www.nswteachers.nsw.edu.au

Office of the Board of Studies NSW

117 Clarence St Sydney NSW 2000
(GPO Box 5300 Sydney 2001)
Ph 02 9367 8111 Fax 02 9367 8484
Web www.boardofstudies.nsw.edu.au

Professional Teachers' Council NSW

Block B, Inside Leichhardt Public School Grounds
Cnr Marion & Norton Sts Leichhardt NSW 2040
(PO Box 577 Leichhardt 2040)
Ph 02 9564 3322 Fax 02 9564 2342
Web www.ptc.nsw.edu.au

Public Service Association of NSW

160 Clarence St Sydney NSW 2000
(GPO Box 3365 Sydney 2001)
Ph 02 9290 1555 Fax 02 9262 1623
Freecall 1800 467 932
Email psa@psa.asn.au
Web www.psa.labor.net.au

Teacher Housing Authority of New South Wales

Level 14, St Martins Tower
31 Market St, Sydney NSW 2000
(PO Box Q339 QVB Post Shop NSW 1230)
Ph 02 9260 2000 Free call 1300 137 343 Fax 02 9261 4227
Email thastaff@tha.nsw.gov.au
Web www.tha.nsw.gov.au

The Association of Independent Schools of New South Wales

Level 4, 99 York St Sydney NSW 2000
Ph 02 9299 2845 Fax 02 9290 2274
Email admin@aisnsw.edu.au
Web www.aisnsw.edu.au

Universities Admissions Centre (NSW and ACT) Pty Ltd

Quad 2, Australia Centre, 8 Parkview Drive
Homebush Bay NSW 2127
(Locked Bag 112 Silverwater 2128)
Ph 02 9752 0200
Web www.uac.edu.au

Vocational Education & Training Accreditation Board

Level 14, 1 Oxford St Darlinghurst NSW 2010
(Locked Bag 21 Darlinghurst 1300)
Ph 02 9244 5335 Fax 02 9244 5344
Email vetab@det.nsw.edu.au
Web www.vetab.nsw.gov.au

Art Gallery of New South Wales

Art Gallery Rd The Domain Sydney 2000
Ph 02 9225 1700 Free call 1800 679 2781 Fax 02 9225 1701
Email artmail@ag.nsw.gov.au
Web www.artgallery.nsw.gov.au

Australian Museum

6 College St (opposite Hyde Park) Sydney 2010
Ph 02 9320 6000 Fax 02 9320 6050
Web www.amonline.net.au

Australian National Botanic Gardens

Clunies Ross St Acton 2601
(GPO Box 1777 Canberra 2601)
Ph 02 6250 9450 Fax 02 6250 9599
Email anbg-info@anbg.gov.au
Web www.anbg.gov.au

Australian National Maritime Museum

2 Murray St Darling Harbour Sydney 2009
(GPO Box 5131 Sydney 2001)
Ph 02 9298 3777 Fax 02 9298 3780
Email info@anmm.gov.au
Web www.anmm.gov.au

Australian Red Cross NSW Office

159 Clarence St Sydney 2000
Ph 02 9229 4111 Fax 02 9229 4244
Email nswinfo@redcross.org.au
Web www.redcross.org.au

Australian War Memorial

Treloar Cr Campbell 2612
(GPO Box 345 Canberra 2601)
Ph 02 6243 4211 Fax 02 6243 4325
Web www.awm.gov.au

CSIRO Education

CSIRO Science Education Centre (New South Wales)
2 Newbiggin Close Riverside Corporate Park North Ryde 2113
(Mail Box 14, T3/3 Julius Ave, Riverside Corporate Park, North Ryde 2113)
Ph 02 9490 8482 Fax 02 9490 8648
Email education.nsw@csiro.au
Web www.csiro.au

Historic Houses Trust of New South Wales

Elizabeth Bay House, Elizabeth Farm, Government House, Hyde Park Barracks Museum, Justice & Police Museum, Meroogal, Museum of Sydney (on the site of the first Government House), Rose Seidler House, Rouse Hill Estate, Susannah Place Museum, The Mint, Vaucluse House
Head Office:The Mint, 10 Macquarie St Sydney 2000
Ph 02 8239 2288 Fax 02 8239 2299
Email info@hht.net.au
Web www.hht.net.au

Lessons Afloat

8/6 John St North Sydney 2060
Ph 02 9929 4919 Fax 02 9929 4911
Email info@lessonsafloat.com.au
Web www.lessonsafloat.com.au

Mount Annan Botanic Garden

Mount Annan Dr Mount Annan 2567
Ph 02 4648 2477 Fax 02 4648 2465
Email mount.annan@rbgsyd.nsw.gov.au
Web www.rbgsyd.nsw.gov.au

Mount Tomah Botanic Garden

Bells Line of Road via Bilpin 2758
Ph 02 4567 2154 Fax 02 4567 2037
Email mount.tomah@rbgsyd.nsw.gov.au
Web www.rbgsyd.nsw.gov.au

Museum of Contemporary Art

140 George St The Rocks 2000
(PO Box R1286 Royal Exchange 1223)
Ph 02 9254 2400 Fax 02 9252 4361
Email mail@mca.com.au
Web www.mca.com.au

National Film and Sound Archive

McCoy Circuit Acton 2601
(PO Box 2002 Canberra 2601)
Ph 02 6248 2000 Toll Free: 1800 067 274 Fax 02 6248 2222
Email enquiries@nfsa.gov.au
Web www.screensound.gov.au

National Gallery of Australia

Parkes Pl Parkes 2600
(GPO Box 1150, Canberra 2601)
Ph 02 6240 6411 Fax 02 6240 6529
Email information@nga.gov.au
Web www.nga.gov.au

National Museum of Australia

Lawson Cr Acton Peninsula Canberra 2600
(GPO Box 1901 Canberra 2601)
Ph 02 6208 5000 Fax 02 6208 5099
Free call 1800 026 132
Email information@nma.gov.au
Web www.nma.gov.au

Ocean World Manly

West Esplanade Manly 2095
Ph 02 8251 7877 Fax 02 9949 7950
Email info@oceanworld.com.au
Web www.oceanworld.com.au

Powerhouse Museum

500 Harris St, Ultimo 2007
(PO Box K346, Haymarket 1238)
Ph 02 9217 0111 Fax 02 9217 0441
Email edserv@phm.gov.au
Web www.powerhousemuseum.com/education

Questacon: **The National Science & Technology Centre**

King Edward Terrace Canberra 2600
(PO Box 5322 Kingston 2604)
Ph 02 6270 2800 Fax 02 6270 2808
Email info@questacon.edu.au
Web www.questacon.edu.au

Royal Botanic Gardens Sydney

Mrs Macquaries Rd Sydney 2000
Ph 02 9231 8111 Fax 02 9251 4403
Web www.rbgsyd.nsw.gov.au

State Library of New South Wales

Macquarie St Sydney 2000
Ph 02 9273 1414 Fax 02 9273 1255
Email library@sl.nsw.gov.au
Web www.sl.nsw.gov.au

Sydney Aquarium

Aquarium Pier Darling Harbour Sydney 2000
Ph 02 8251 7800 Fax 02 9262 2385
Email education@sydneyaquarium.com.au
Web www.sydneyaquarium.com.au

Sydney Markets, Fresh for Kids Program

PO Box 2 Sydney Markets NSW 2129
Ph 02 9325 6200 Fax 02 9325 6288
Email freshforkids@sydneymarkets.com.au
Web www.sydneymarkets.com.au/freshforkids

Sydney Opera House, Kids at the House Program

Bennelong Point Sydney
(GPO Box R239 Royal Exchange 1225)
Ph 02 9250 7111 Fax 02 9251 3943
Email infodesk@sydneyoperahouse.com
Web www.sydneyoperahouse.com

Taronga Zoo Education Centre

Bradleys Head Rd Mosman 2088
(PO Box 20 Mosman 2088)
Ph 02 9969 2777 Fax 02 9978 4508
Email tzed@zoo.nsw.gov.au
web www.zoo.nsw.gov.au

Western Plains Zoo Education Centre

Obley Rd Dubbo 2830
(PO Box 831 Dubbo 2830)
Ph 02 6881 1400 Fax 02 6884 1722
Email wpz@zoo.nsw.gov.au
Web www.zoo.nsw.gov.au

Sport and Recreation Centres

NSW Tourism, Sport and Recreation, aims to raise interest and involvement in recreational pursuits. The outdoor education program helps students to improve leisure and social skills, and to increase environmental awareness. The Central Office is located at Level 3, 6 Figtree Drive, Homebush Bay, NSW 2127 (Locked Bag 1422 Silverwater NSW 2128). Telephone: 02 9006 3700, Fax: 02 9006 3800. General enquiries on email: info@dsr.nsw.gov.au

Berry

660 Coolangatta Rd (PO Box 185) Berry 2535
Ph 02 4464 1406 Fax 02 4464 2270
Freecall 1800 811 387

Borambola

1980 Sturt Highway Borambola via Wagga Wagga 2650
Ph 02 6928 4300 Fax 02 6928 4384
Freecall 1800 810 890

Broken Bay

c/- Post Office Brooklyn 2083
Ph 02 4349 0600 Fax 02 4379 1201
Freecall 1800 644 049

Jindabyne Sport and Recreation Centre

207 The Barry Way (PO Box 514) Jindabyne 2627
Ph 02 6450 0200 Fax 02 6456 2917

Lake Ainsworth

Pacific Parade (PO Box 121) Lennox Head 2478
Ph 02 6687 7168 Fax 02 6687 7920
Freecall 1800 655 248

Lake Burrendong

Tara Road Lake Burrendong 2820
c/o Post Office Mumbil NSW 2820
Ph 02 6846 7403 Fax 02 6846 7597
Freecall 1800 815 892

Lake Keepit

Fitness Camp Road Gunnedah 2380
Ph 02 6769 7603 Fax 02 6769 7585
Freecall 1800 644 105

Milson Island

PMB 11 Brooklyn 2083
Ph 02 9985 9261 Fax 02 9985 9360

Myuna Bay

Wangi Wangi Road Myuna Bay 2264
PO Box 5037 Dora Creek 2264
Ph 02 4973 3301 Fax 02 4970 5014
Freecall 1800 654 422

Point Wolstoncroft

Kanangra Drive Gwandalan 2259
Ph 02 4976 1666 Fax 02 4976 2705
Freecall 1800 819 244

Sydney Academy of Sport and Recreation

Wakehurst Parkway (PO Box 57) Narrabeen 2101
Ph 02 9454 0222 Fax 02 9454 0133

Distance Education Schools and Centres

The Department of Education and Training has in place distance education provision to deliver full-time educational programs to students who are isolated or whose special circumstances prevent them from attending school on a regular basis. Single subject (Years 9-12) programs are also provided in specific circumstances. Distance education provision is available from 17 locations across the state.

Primary

Bourke Walgett School of Distance Education (4644) - Bourke Campus
Green St Bourke 2840
Ph 02 6872 2424 Fax 02 6872 3109

Bourke Walgett School of Distance Education (4644) - Walgett Campus
Warrena St Walgett 2832
Ph 02 6828 1374 Fax 02 6828 1936

North East Public School of Distance Education (4643) - Port Macquarie Campus
School St Port Macquarie 2444
Ph 02 6584 1118 Fax 02 6584 1210

North East Public School of Distance Education (4643) - Casino Campus
103 Walker St Casino 2470
Ph 02 6662 6414 Fax 02 6662 3283

Queanbeyan Public School (2922)
15 Isabella St. Queanbeyan 2620
Ph 02 6299 2966 Fax 02 6299 2863

School of the Air (5302) – Broken Hill Campus
Lane St Broken Hill 2880
Ph 08 8087 3565 Fax 08 8088 5998

School of the Air (5302) – Hay Campus
Lachlan St Hay 2700
Ph 02 6993 1882 Fax 02 6993 3069

Sydney Distance Education Primary School (4586)
Cnr Cambridge & Holt Sts Stanmore 2048
Ph 02 9568 9888 Fax 02 9568 9827

Tibooburra Outback School of the Air (3211)
Briscoe St Tibooburra 2880
Ph 08 8091 3317 Fax 08 8091 3496

Secondary

Camden Haven High School (8280)
Valley View Rd Laurieton 2443
Ph 02 6556 8200 Fax 02 6556 8205

Karabar High School (8524)
Donald Rd Queanbeyan 2620
Ph 02 6298 4300 Fax 02 6299 2529

Open High School (8588)
78 Avoca St Randwick 2031
Ph 02 9381 4801 Fax 02 9381 4950

Southern Cross School (4428)
Chickiba Dr Ballina East 2478
Ph 02 6686 9112 Fax 02 6686 9295

Sydney Distance Education High School (8587)
Forbes St Woolloomooloo 2011
Ph 02 9383 0200 Fax 02 9383 0222

Walgett Community College – High School (8475)
Arthur St Walgett 2832
Ph 02 6828 1902 Fax 02 6828 1994

P - 12

Distance Education Support Unit - Sir Eric Woodward Memorial School (5675)
Ayres & Acron Rds St Ives 2075
Ph 02 9988 0677 Fax 02 9988 0966

Dubbo School of Distance Education (4587)
Myall St Dubbo 2830
Ph 02 5804 7000 Fax 02 6884 0777

Environmental Education Centres

The NSW Department of Education and Training manages 23 Environmental Education Centres throughout the State. The Centres complement school programs and their staff consult with teachers in designing activities and programs for all age groups and key learning areas. The staff of Environmental Education Centres also provide training and development for teachers and community members. The main role of Environmental Education Centres is to support environmental education and education for sustainability in public schools and assist schools and communities in the Department's Sustainable Schools Program.

Full details of Environmental Education Centres can be found in the main alphabetical list of schools.

Awabakal
Botany Bay
Bournda
Brewongle
Camden Park
Cascade
Dorroughby
Field of Mars
Georges River
Gibberagong
Illawarra
Longneck Lagoon
Observatory Hill
Penrith Lakes
Red Hill
Riverina
Royal National Park
Rumbalara
Thaigarrah
Wambangalang
Warrumbungle National Park
Wetlands
Wooglemai

DET also covers the salaries of staff in two Zoo Education Centres. Zoo Education Centres perform similar support functions to schools as Environmental Education Centres. The two Centres are:

Taronga Zoo Education Centre, Mosman
Western Plains Zoo Education Centre, Dubbo

Multi-campus Colleges

A multi-campus college comprises a number of campuses that work together as a single educational entity across a number of separate sites. Each campus is usually specialised in the sense that it targets the needs and interests of a particular group of students. For example, junior secondary campuses are designed to support the learning needs of young adolescents, while senior secondary campuses are designed to provide a more adult learning environment for post-compulsory students. A number of multi-campus colleges are co-located with TAFE and university campuses.

Brisbane Water Secondary College

Brisbane Water Secondary College Umina Campus
Brisbane Water Secondary College Woy Woy Campus

Callaghan College

Callaghan College, Jesmond Campus
Callaghan College, Wallsend Campus
Callaghan College, Waratah Technology Campus

Chifley College

Chifley College, Bidwill Campus
Chifley College, Dunheved Campus
Chifley College, Mount Druitt Campus
Chifley College, Senior Campus
Chifley College, Shalvey Campus

Denison College of Secondary Education

Denison College of Secondary Education, Bathurst High
Denison College of Secondary Education, Kelso High Campus

Dubbo College

Dubbo College, Delroy Campus
Dubbo College, Senior Campus
Dubbo College, South Campus

Georges River College

Georges River College, Hurstville Boys Campus
Georges River College, Oatley Senior Campus
Georges River College, Peakhurst Campus
Georges River College, Penshurst Girls Campus

Great Lakes College

Great Lakes College, Forster Campus
Great Lakes College, Tuncurry Junior Campus
Great Lakes College, Tuncurry Senior Campus

Moree Secondary College

Moree Secondary College, Albert St Campus
Moree Secondary College, Carol Ave Campus

Nirimba Collegiate Group

Quakers Hill High School
Riverstone High School
Seven Hills High School
Wyndham College

Northern Beaches Secondary College

Northern Beaches Secondary College, Balgowlah Boys Campus
Northern Beaches Secondary College, Cromer Campus
Northern Beaches Secondary College, Freshwater Senior Campus
Northern Beaches Secondary College, Mackellar Girls Campus
Northern Beaches Secondary College, Manly Campus

Sydney Secondary College

Sydney Secondary College, Balmain Campus
Sydney Secondary College, Blackwattle Bay Campus
Sydney Secondary College, Leichhardt Campus

Tuggerah Lakes Secondary College

Tuggerah Lakes Secondary College, Berkeley Vale Campus
Tuggerah Lakes Secondary College, The Entrance Campus
Tuggerah Lakes Secondary College, Tumbi Umbi Campus

Walgett Community College

Walgett Community College High School
Walgett Community College Primary School

Parents as Teachers Program

The Parents as Teachers Program works with families with children from birth to three years living in areas where indicators of disadvantage are high. Parents are supported in their parenting role through parent education programs, regular home visits, group meetings and printed information. The program aims to promote children's cognitive, language, social and motor development as these are recognised as being critical to future positive learning and development. A parenting consultant is located in a parenting centre in the school.

Bowen Public School

Park St Orange 2800
Ph 02 6361 3056 Fax 02 6361 1831

Goodooga Central School

Doyle St Goodooga 2831
Ph 02 6829 6298 Fax 02 6829 6294

Hamilton Public School

Tudor St Hamilton 2303
Ph 02 4969 7862 Fax 02 4961 5148

Ivanhoe Central School

Columbas St Ivanhoe 2878
Ph 02 6995 1151 Fax 02 6995 1290

Madang Avenue Public School

Mimika Avenue Whalan 2770
Ph/Fax 02 9832 0543

Moree Public School

Albert St Moree 2400
Ph 02 6752 7776 Fax 02 6752 4016

Sadleir Public School

Insignia St Sadleir 2167
Ph 02 9608 4974 Fax 02 9608 4935

Tolland Public School

Hawkes Place Wagga Wagga 2650
Ph 02 6931 1966 Fax 02 6931 4312

Tweed Heads South Public School

Heffron St Tweed Heads South 2486
Ph 07 5523 2648 Fax 07 5524 3466

Warilla Public School

Leawarra Ave Warilla 2528
Ph/Fax 02 4297 6138

The NSW Department of Education and Training (DET) operates 100 preschools across the State. Twenty-four of these preschools are located in communities with large numbers of Aboriginal families. Preschools provide educational programs to children for one year prior to enrolment in Kindergarten. The preschools are an integral part of the schools where they are located. Children are eligible for enrolment in preschool classes from the beginning of the school year if they turn four years of age on or before 31 July in that year.

Names in brackets are the Aboriginal names of preschools in Aboriginal communities.

Alma Public School (Alma Bugdlie)
Annandale Public School
Arncliffe West Infants School
Ashcroft Public School
Australia Street Infants School
Banksmeadow Public School
Bankstown South Infants School
Bass Hill Public School
Batemans Bay Public School
Bidwill Public School
Birchgrove Public School
Boggabilla Central School
Bonnyrigg Public School
Briar Road Public School
Broken Hill Public School
Busby West Public School
Cambridge Park Public School
Camdenville Public School
Canley Heights Public School
Canley Vale Public School
Cardiff South Public School
Casino Public School (Djanenjam)
Casino West Public School
Claymore Public School
Coonamble Public School
Darlington Public School
Dawson Public School
Doonside Public School (Wingarra)
Dubbo School of Distance Education
Dubbo West Public School
Eastern Creek Public School
Edgeworth Public School
Elermore Vale Public School
Enngonia Public School
Fairy Meadow Public School
Five Dock Public School
Granville Public School
Harrington Street Public School
Hume Public School
Irrawang Public School
John Brotchie Nursery School (separate Preschool)
John Warby Public School
Kegworth Public School
Kemblawarra Public School
Kingswood Park Public School
Kingswood South Public School
Koonawarra Public School
Lalor Park Public School
Lansvale Public School
Lethbridge Park Public School
Lismore South Public School
Liverpool West Public School (Coota Gulla)
Lurnea Public School
Madang Avenue Public School
Manning Gardens Public School
Marayong Public School
Mascot Public School
Matraville Soldiers Settlement Public School
Mayfield West Public School
Moama Public School (Cummeragunja)
Mount Druitt Public School
Mount Warrigal Public School
Mungindi Central School
Narrabri West Public School
Nowra East Public School (Wayeela Cooinda)
Oak Flats Public School
Old Guildford Public School
Orange Grove Public School
Oxley Park Public School
Pendle Hill Public School
Plunkett Street Public School
Punchbowl Public School
Riverstone Public School
Riverwood Public School
Rosehill Public School
Rozelle Public School
Rydalmere East Public School
Rydalmere Public School
Sadleir Public School
Sarah Redfern Public School
Sefton Infants School
Seven Hills West Public School
Smithfield Public School
St Johns Park Public School
St Marys Public School
Stockton Public School
Telarah Public School
The Entrance Public School
Tolland Public School
Toukley Public School (Kooloora)
Tweed Heads South Public School
Villawood East Public School
Walgett Community College - Primary School (Birralegal Goondi)
Waratah Public School
Wellington Public School
Whalan Public School
Wilcannia Central School (Barlu Kurli)
Windale Public School
Woy Woy Public School
Yates Avenue Public School

Saturday School of Community Languages

The Saturday School of Community Languages is part of the secondary school system, offering more than twenty community languages to students wishing to study their family background when it is not available to students in their own high schools or TAFE Colleges. Classes are held on Saturdays during school terms in the 16 centres below.

The program is administered during office hours on Monday to Friday by the Saturday School of Community Languages, Curriculum K-12 Directorate, Languages Unit, 3A Smalls Rd (Private Bag 3), Ryde 2112, Ph 02 9886 7505. Faxes may be sent on 02 9886 7514. On Saturdays the centres may be contacted by telephone or fax on the numbers listed below.

Enrolment forms and information are available at
www.curriculumsupport.education.nsw.gov.au/secondary/languages/sscl

Arthur Phillip High School
Macquarie St Parramatta 2150
Ph/Fax 02 9891 5705

Ashfield Boys High School
Liverpool Rd Ashfield 2131
Ph/Fax 02 9716 7049

Bankstown Girls High School
Mona St Bankstown 2200
Ph/Fax 02 9796 2490

Birrong Boys High School
Rodd St Birrong 2143
Ph/Fax 02 9644 5638

Birrong Girls High School
Cooper Rd Birrong 2143
Ph/Fax 02 9644 3274

Chatswood High School
Centennial Ave Chatswood 2067
Ph/Fax 02 9413 3233

Dulwich High School
Seaview St Dulwich Hill 2203
Ph/Fax 02 9568 6215

Kogarah High School
Regent St (entrance in Gladstone St) Kogarah 2217
Ph/Fax 02 9553 8397

Liverpool Boys High School
Forbes St Liverpool 2170
Ph/Fax 02 9822 5420

Liverpool Girls High School
Forbes St Liverpool 2170
Ph/Fax 02 9822 5423

Merewether High School
Chatham Rd Broadmeadow 2292
Ph/Fax 02 4962 3112

Randwick Centre
c/- Open High School
78 Avoca St Randwick 2031
(Locked Bag 88 Strawberry Hills 1420)
Ph /Fax 02 9399 7361

St George Girls High School
Victoria St Kogarah 2217
Ph/Fax 02 9553 8398

Smiths Hill High School
Gipps St (SSCL office located in Campbell St)
Wollongong 2500 (PO Box 110 Keiraville 2500)
Ph/Fax 02 4226 2446

Strathfield Girls High School
Albert Rd (SSCL office in Oxford Rd) Strathfield 2135
Ph/Fax 02 9746 7498

The Hills Sports High School
(formerly Grantham HS)
Best Rd Seven Hills 2147
Ph/Fax 9831 1587

Schools as Community Centres is a government funded interagency program managed by the NSW Departments of Community Services, Health, Housing, Education and Training and Ageing, Disability and Home Care. The Department of Education and Training is the lead agency responsible for the administration of the program. The purpose of Schools as Community Centres program is to reduce the impact of disadvantage for children 0-8 by facilitating connections between families, organisations and schools in communities where indicators of disadvantage are high. The focus of the program is support, early intervention and prevention. A local facilitator is based in a community centre in the school.

Albion Park Rail Public School
Tongatta Rd (PO Box 1) Albion Park 2527
Ph 02 4256 4219 Fax 02 4256 4284

Alexandria Park Community School
(Connect Redfern)
(PO Box 3164 Redfern 2016)
Cnr Power Ave and Park Rd
Alexandria 2015
Ph 02 9319 3207 Fax 02 9319 1757

Anna Bay Public School
(Gan Gan SaCC)
RMB 710 Gan Gan Rd Anna Bay 2316
Ph 02 4982 1767 Fax 02 4982 2371

Ashcroft Public School
Sherriff St Ashcroft 2168
Ph/Fax 02 8783 0951

Auburn North Public School
Adderley St Auburn 2144
Ph 02 9748 7606 Fax 02 9748 0109

Blue Haven Public School
37 Colorado Dr Blue Haven 2262
Ph 02 4399 0167 Fax 02 4399 0184

Bonnyrigg Public School
Tarlington Pde Bonnyrigg 2177
Ph 02 8786 1310 Fax 02 9823 7826

Buninyong Public School
Myall St Dubbo 2830
Ph: 02 6884 4988 Fax 02 6884 8913

Cabramatta Public School
Cabramatta Rd (PO Box 152)
Cabramatta 2166
Ph 02 9728 9127 Fax 02 9728 2249

Canley Vale Public School
Canley Vale Rd Canley Vale 2166
Ph 02 9725 6969 Fax 02 9728 1792

Cessnock Public School
Rawson St Cessnock 2325
Ph/Fax 02 4990 9354

Chertsey Public School
Willow Rd Springfield 2250
Ph/Fax 02 4323 7158

Condoblin Public School
Molong St Condoblin 2877
Ph 02 6895 2134 Fax 02 6895 3665

Coonamble Public School
Bertram St Coonamble 2829
Ph 02 6822 3179 Fax 02 6822 3184

Curran Public School
Melaleuca Dr Macquarie Fields 2564
Ph 02 9829 5231 Fax 02 9829 3973

Dareton Public School
Matong St Dareton 2717
Ph 03 5027 4032 Fax 03 5027 4680

Dee Why Public School
Regent St Dee Why 2099
Ph 02 9982 5414 Fax 02 9971 5516

Dubbo West Public School
East St Dubbo 2830
Ph: 02 6882 3086, 02 6882 4609
Fax 02 6884 3439.

Fairfield Public School
68-82 Smart St Fairfield 2165
Ph 02 9724 9977 Fax 02 9727 9160

Farmborough Road Public School
Farmborough Rd Unanderra 2526
(PO Box 229 Unanderra 2526)
Ph: 02 4272 1422 Fax 02 4271 5335

Fennell Bay Public School
Bay Rd Fennell Bay 2283
Ph 02 4959 6140 Fax 02 4950 5413

Forbes North Public School
Thomson & Facey St Forbes 2871
Ph 02 6852 3008 Fax 02 6852 1452

Franklin Public School
Forest St Tumut 2720
Ph: 02 6947 6961 Fax 02 6947 1377

Glebe Public School
Derwent St Glebe 2037
Ph 02 9566 1285 Fax 02 9552 1703

Glenroi Heights Public School
Maxwell Ave Orange East 2800
Ph 02 6362 8251 Fax 02 6362 2133

Goulburn Public School
Bourke St Goulburn 2580
Ph: 02 4821 8910 Fax 02 4822 1395

Granville South Public School
Woodville Rd Guildford 2161
Ph 02 9892 2328 Fax 02 9892 2045

Irrawang Public School
Geer St Raymond Terrace 2324
Ph 02 4987 4666 Fax 02 4987 5429

Kelso Public School
Gilmour St Kelso 2795
Ph/Fax 02 6331 1551

Kempsey West Public School
Marsh St Kempsey West 2440
Ph 02 6562 1475 Fax 02 6562 6538

Lakemba Public School
Alice St Lakemba 2195
Ph 02 9759 2915 Fax 02 9740 6794

Maroubra Bay Public School
(Maroubra Bay/South Coogee SaCC)
Duncan St Maroubra 2035
Ph: 02 9349 7154 Fax 02 9349 5836

Marrickville West Public School
Livingstone Rd
Marrickville West 2204
Ph/Fax 02 9558 4036

Moree East Public School
Adelaide St Moree 2400
Ph 02 6752 3624 Fax 02 6752 3632

Narooma Public School
Montague St Narooma 2546
Ph 02 4476 4834 Fax 02 4476 4874

Narrandera Public School
Adam St Narrandera 2700
Ph 02 6959 3894 Fax 02 6959 3274

Northlakes Public School
Gorama Ave San Remo 2262
Ph 02 4390 9718 Fax 02 4390 4793

Punchbowl Public School
Canterbury Rd Punchbowl 2196
Ph/Fax 02 9750 8906

Queanbeyan Public School
Isabella St Queanbeyan 2620
Ph 02 6297 2167 Fax 02 6299 4282

Rosemeadow Public School
Antony & Copperfield Dr
Rosemeadow 2560
(PO Box 63 Campbelltown 2560)
Ph 02 4621 4902 Fax 02 4621 2033

Sanctuary Point Public School
Idlewild Ave Sanctuary Point 2540
Ph: 02 4443 0520 Fax 02 4443 0553

Telopea Public School
Sturt St Telopea 2117
Ph 02 9898 3448 Fax 02 9684 2653

The Meadows Public School
Fuller St Seven Hills 2147
Ph 02 9896 7514 Fax 02 9896 7959

Umina Public School
Sydney Ave Umina Beach 2257
Ph 02 4343 1929 Fax 02 4344 4130

Windale Public School
Kilfera St Windale 2306
Ph 02 4948 7786 Fax 02 4948 9720

Woodberry Public School
Lawson Ave
Woodberry 2322
Ph 02 4964 2174 Fax 02 4964 1148

Wyong Public School
Cutler Ave Wyong 2259
Ph 02 4352 3637 Fax 02 4351 2885

Intensive English Centres (IECs) and the Intensive English High School (IEHS) provide intensive English as a Second Language (ESL) tuition to recently arrived, high school aged students whose first language is not English. These students who present for enrolment in high school should be referred to the local IEC/IEHS for assessment and possible enrolment. The IECs and IEHS listed below may be contacted directly for further information.

Bankstown IEC

Antwerp St Bankstown 2200
Ph 02 9796 8138 Fax 02 9796 8699
Host School: Bankstown Senior College (8381)
Email: Bankstownc-i.School@det.nsw.edu.au

Beverly Hills IEC

Melvin St North Beverly Hills 2209
Ph 02 9533 1293 Fax 02 9584 1963
Host School: Beverly Hills Girls HS (8255)
Email: Beverlyhg-i.School@det.nsw.edu.au

Cabramatta IEC

Aladore Ave Cabramatta 2166
Ph 02 9727 3562 Fax 02 9728 1069
Host School: Cabramatta HS (8209)
Email: Cabramatta-i.School@det.nsw.edu.au

Chatswood IEC

Centennial Ave Chatswood 2067
Ph 02 9411 5288 Fax 02 9415 1418
Host School: Chatswood HS (8232)
Email: Chatswood-i.School@det.nsw.edu.au

Chester Hill IEC

Kenward Ave Chester Hill 2161
Ph 02 9645 3780 Fax 02 9645 5172
Host School: Chester Hill HS (8269)
Email: Chesterhil-i.School@det.nsw.edu.au

Cleveland Street IEHS

Chalmers & Cleveland Sts Surry Hills 2010
(PO Box 337 Strawberry Hills 2010)
Ph 02 9319 4806, 02 9319 4807 Fax 02 9698 5691
Email: Clevelandi-h.School@det.nsw.edu.au

Evans IEC

Walters Rd Blacktown 2148
Ph 02 9622 1289, 02 9622 1348 Fax 02 9676 8573
Host School: Evans HS (8420)
Email: Evans-i.School@det.nsw.edu.au

Fairfield IEC

The Horsley Dr Fairfield 2165
Ph 02 9724 6885 Fax 02 9726 4399
Host School: Fairfield HS (8550)
Email: Fairfield-i.School@det.nsw.edu.au

Holroyd IEC

Cumberland Rd Greystanes 2145
Ph 02 9896 1172, 02 9896 1057 Fax 02 9896 5180
Host School: Holroyd HS (8424)
Email: Holroyd-i.School@det.nsw.edu.au

Kogarah IEC

Regent St (c/- Kogarah High School Gladstone) Kogarah 2217
Ph 02 9587 0529, 02 9587 5053 Fax 02 9553 8542
Host School: Kogarah HS (8320)
Email: Kogarah-i.School@det.nsw.edu.au

Lurnea IEC

Hillview Pde Lurnea 2170
Ph 02 9602 1858 Fax 02 9824 1156
Host School: Lurnea HS (8401)
Email: Lurnea-i.School@det.nsw.edu.au

Marrickville IEC

Northcote St Marrickville 2204
Ph 02 9550 0251, 02 9550 0252 Fax 02 9560 8079
Host School: Marrickville HS (8540)
Email: Marrickvil-i.School@det.nsw.edu.au

Marsden IEC

Winbourne St West Ryde 2114
Ph 02 9858 3440 Fax 02 9858 1483
Host School: Marsden HS (8225)
Email: Marsden-i.Admin@det.nsw.edu.au

Miller IEC

Cabramatta Ave Miller 2168
Ph 02 9607 2751 Fax 02 9607 3160
Host School: Miller HS (8394)
Email: Miller-i.School@det.nsw.edu.au

Warrawong IEC

Cowper St (PO Box 105) Warrawong 2502
Ph 02 4274 4346 Fax 02 4274 7054
Host School: Warrawong HS (8480)
Email: Warrawong-i.School@det.nsw.edu.au

Specialist Secondary Schools

Some secondary schools have a special focus, either in curriculum or in the nature of the student enrolment.

Entry to selective high schools and selective agricultural high schools will generally be dependent upon academic ability and student performance at the selective high school tests which are held for Year 6 students in March each year. A small number of vacancies may also occur in Years 8-12 each year.

Curriculum in specialist technology, languages, sports and performing arts high schools will provide a specialist focus as referred to in the school name. Enrolment at these schools may depend upon students meeting special criteria for enrolment. These criteria may include performance or audition according to the specialist focus of the school.

Senior high schools offer courses appropriate to the locally identified needs of post-compulsory school age students. Each senior high school will offer a differing curriculum based upon those needs.

Agriculture High Schools

Farrer Memorial Agricultural High School
Hurlstone Agricultural High School
James Ruse Agricultural High School
Yanco Agricultural High School

Creative Arts High School

Ku-ring-gai Creative Arts High School

Intensive English High School

Cleveland St Intensive English High School

Junior High Schools

Brisbane Water Secondary College Umina Campus
Callaghan College Wallsend Campus
Callaghan College Waratah Campus
Chifley College Dunheved Campus
Chifley College Mount Druitt Campus
Chifley College Shalvey Campus
Dubbo College Delroy Campus
Dubbo College South Campus
Georges River College Hurstville Boys Campus
Georges River College Peakhurst Campus
Georges River College Penhurst Girls Campus
Great Lakes College Forster Campus
Great Lakes College Tuncurry Junior Campus
Moree Secondary College Carol Ave Campus
Quakers Hill High School
Riverstone High School
Seven Hills High School
Sydney Secondary College Balmain Campus
Sydney Secondary College Leichhardt Campus
Tuggerah Lakes Secondary College Berkeley Vale Campus
Tuggerah Lakes Secondary College Tumbi Umbi Campus

Language High Schools

Blakehurst High School
Kirrawee High School
Strathfield Girls High School

Marine Technology High School

Eden Marine Technology High School

Partially Selective High Schools

Alexandria Park Community School
Chatswood High School
Macquarie Fields High School
Rose Bay Secondary College
Ryde Secondary College
Sefton High School
Sydney Secondary College Balmain Campus
Sydney Secondary College Blackwattle Bay Campus
Sydney Secondary College Leichhardt Campus
Tempe High School

Performing Arts High Schools

Campbelltown High School of the Performing Arts
Conservatorium High School
Hunter School of Performing Arts
Newtown High School of the Performing Arts
Wollongong High School of the Performing Arts

Rural Technology High School

Canobolas Rural Technology High School

Selective High Schools

Baulkham Hills High School
Caringbah High School
Farrer Memorial Agricultural High School
Fort Street High School
Girraween High School
Gosford High School
Hornsby Girls High School
Hurlstone Agricultural High School
James Ruse Agricultural High School
Northern Beaches Secondary College Manly Campus
Merewether High School
Normanhurst Boys High School
North Sydney Boys High School
North Sydney Girls High School
Penrith High School
Smiths Hill High School
St George Girls High School
Sydney Boys High School
Sydney Girls High School
Sydney Technical High School
Yanco Agricultural High School

Senior High Schools

Bankstown Senior College
Bradfield College
Brisbane Water Secondary College Woy Woy Campus
Callaghan College Jesmond Campus
Chifley College Senior Campus
Coffs Harbour Senior Campus
Dubbo College Senior Campus
Georges River College Oatley Senior Campus
Great Lakes College Tuncurry Senior Campus
Illawarra Senior College
Moree Secondary College Albert St Campus
Northern Beaches Secondary College Freshwater Senior Campus
St Marys Senior High School
Sydney Secondary College Blackwattle Bay Campus
Tuggerah Lakes Secondary College The Entrance Campus
Wyndham College

Sport High Schools

Endeavour Sports High School
Hunter Sports High School
Illawarra Sports High School
Matraville Sports High School
Narrabeen Sports High School
The Hills Sports High School
Westfields Sports High School

Technology High Schools

Callaghan College Waratah Technology Campus
Cherrybrook Technology High School
Doonside Technology High School
East Hills Boys Technology High School
East Hills Girls Technology High School
Glendale High School
Gymea Technology High School
James Cook Boys Technology High School
Keira High School
Macquarie Boys Technology High School
Miller Technology High School
Rutherford Technology High School

Visual Arts High School

Dulwich High School of Visual Arts & Design

State Training Centres provide a wide range of vocational education and training services and information for State Training Services. They are responsible for:

- administering and monitoring apprenticeships and traineeships registered with the Department
- engaging with industry and the community to determine and address regional and national skills shortage training needs, and monitoring vocational training programs funded by the Department
- overseeing contractual funding arrangements between the Department and registered training organisations, and group training companies
- working in collaboration with other sections of the Department (e.g. school careers advisors and regional vocational education consultants to promote school-based part-time apprenticeships/traineeships, trade schools, and vocational training programs for high school students),
- processing applications for Trade Skills Recognition from workers from NSW and overseas, and
- co-ordinating regional heats for the annual NSW State Training Awards.

Field and administrative staff, based in the Centres, can provide advice and assistance in person, over the phone or during a site visit to your school, college or workplace.

State Training Centres are located in 9 regional and metropolitan locations with an additional four outposted officers servicing major population centres. Phone 13 28 11 to be connected to your nearest Centre, at the cost of a local call.

Hunter

Location	State Office Block, Level 1 117 Bull St Newcastle West 2302 (Locked Bag 17 Hamilton DC Hamilton 2303)
General enquiries	Ph 02 4974 8570 Fax 02 4925 2139

Illawarra

Location	Level 1, Block E, State Office Block 84 Crown St (PO Box 469) Wollongong East 2520
General enquiries	Ph 02 4224 9300 Fax 02 4224 9334

New England

Location	Level 2, Noel Park House 155 - 157 Marius St (PO Box 399) Tamworth 2340
General enquiries	Ph 02 6755 5099 Fax 6766 4120

North Coast

Location	Level 4, Suite 3, 29 Molesworth St (PO Box 575) Lismore 2480
General enquiries	Ph 02 6627 8400 Fax 02 6621 9994

Northern Sydney

Location	Level 13, 12 Help St Chatswood 2067 (PO Box 5227 West Chatswood 1515)
General enquiries	Ph 02 9242 1700 Fax 02 9415 3979

Riverina

Location	87 Forsyth St (PO Box 2304) Wagga Wagga 2650
General enquiries	Ph 02 6937 7600 Fax 02 6921 0724

Southern Sydney

Location	Level 2, 41-45 Rickard Rd Bankstown 2200 (PO Box 1214 Bankstown 1885)
General enquiries	Ph 02 8707 9600 Fax 02 9709 5356

Western Sydney

Location	Ground Floor, 16 - 18 Wentworth St Parramatta 2150 (PO Box 1007 Parramatta 2124)
General enquiries	Ph 02 9204 7400 Fax 9635 9775

Western NSW

Location	Level 1, State Office Building Cnr Anson and Kite Sts (PO Box 53) Orange 2800
General enquiries	Ph 02 6392 8500 Fax 02 6392 8539

Outposted locations

Dubbo	Ph 02 6881 6178
Coffs Harbour	Ph 02 6648 5980
Penrith	Ph 02 4724 8247
Port Macquarie	Ph 02 6584 1587

Aboriginal Programs

Sydney region	Ph 02 9204 7430
North/Western NSW	Ph 02 6755 5089
Southern NSW	Ph 02 4224 9331
Western NSW	Ph 02 6881 6178
The Way Ahead for Aboriginal People Program	Ph 02 6627 8419

For more information about:

State Training Services	click on www.skilling.nsw.gov.au
Apprenticeships and traineeships	click on apprenticeship.det.nsw.edu.au
School-based apprenticeships/traineeships and Trade Schools	click on http://sbatinnsw.info/available.php
Vocational studies in high schools	click on www.det.nsw.edu.au/vetinschools
Aboriginal training programs	click on http://aboriginaleducation.nsw.edu.au

Trades Skills Recognition

The Department provides a service, through the NSW Vocational Training Tribunal (VTT), for people who are seeking recognition of their trade skills and the issue of *trade certification* in order to work in NSW. Applicants include people who have:

a) worked in a trade for more than four years but never undertaken supplementary formal training or

b) worked in a trade and gained formal qualifications issued in other states/territories in Australia or overseas or

c) attained formal qualifications but require NSW trade certification in order to apply for licenses from a NSW licensing authority.

Applications for trades recognition are assessed by a panel of VTT appointed industry experts. Successful applicants are granted either: (a) a *Certificate of Proficiency* - that recognises on the job experience and relevant formal training undertaken; or (b) a *Craft Certificate* - that recognises on the job experience only. Applicants may be sent for a *trade skills test* with a registered training organisation as part of their assessment. Unsuccessful applicants may be referred to further vocational training if they wish to re-apply. For more information, a brochure and application form (including translated versions) contact:

Trade Skills Recognition Vocational Training Tribunal
L12, 1 Oxford St
Darlinghurst 2010
(or Locked Bag 53, PO Darlinghurst 1300)
Ph 02 9266 8450, 8459, 8236, 8448

OR go to http://apprenticeship.det.nsw.edu.au and click on **Trade Skills Recognition** in the column under FREQUENTLY USED FEATURES for more information.

25 Trade Schools will be operating across NSW in locations with identified trade skills shortages. They will be attached to existing high schools and TAFE NSW colleges and allow students to take part in school based apprenticeships and traineeships while completing their Higher School Certificate. NSW HSC students who successfully complete part of a trade course while at school will be given credit towards the completion of their apprenticeship.

Operating in 2008

Ballina Trade School

Ballina High School
Burnett St Ballina 2478
Ph 02 6686 2133 Fax 02 6686 4235
Email: ballina-h.school@det.nsw.edu.au
Region/Institute: North Coast Region

Campbelltown Trade School

Campbelltown College
Narellan Rd Campbelltown 2560
Ph 02 4620 1700 Fax 02 4620 1752
Email: swsi.tradeschool@det.nsw.edu.au
Region/Institute: TAFE NSW - South Western Sydney Institute

Colyton Trade School

Colyton High School
37 - 53 Carpenter St Colyton, 2760
Ph 02 9623 2789 Fax 02 9833 1165
Email: colyton-h.school@det.nsw.edu.au
Region/Institute: Western Sydney Region

Glendale Trade School

Oaklands St Glendale 2285
Ph 02 4923 7694 Fax 02 4923 7915
Email: HunterGlendaleTradeSchool@det.nsw.edu.au
Region/Institute: TAFE NSW - Hunter Institute

Nambucca Heads Trade School

Nambucca Heads High School
Centenary Dr, Nambucca Heads NSW 2448
Ph: 6568 6777 Fax: 6568 8328
Email: nambuccahd-h.School@det.nsw.edu.au
Region/Institute: North Cost Region

Queanbeyan Trade School

Queanbeyan High School
Agnes Ave Queanbeyan 2620
Ph 02 6297 2088 Fax 02 6299 4285
Email: queanbeyan-h.school@det.nsw.edu.au
Region/Institute: Illawarra and South East Region

St George Trade School

St George College
Cnr Princes Highway & President Ave, Kogarah 2217
Ph 02 9598 6229 Fax 02 9553 9351
Email: SIStGeorgeTradeSchool@det.nsw.edu.au.
Region/Institute: TAFE NSW - Sydney Institute

Tamworth TAFE Trade School

Tamworth TAFE
Janison St, Tamworth NSW 2340
Ph: 6768 2200 Fax: 6768 2206
Email: alison.dundon@det.nsw.edu.au
Region/Institute: TAFE NSW – New England Institute

Wyong TAFE Trade School

Wyong TAFE
Porter St, Wyong 2259
Ph:4350 2222 Fax: 4350 2247
Email: tonyhanna@det.nsw.edu.au
Region/Institute: TAFE NSW - Hunter Institute

Priority Schools Programs (PSP) support schools serving high concentrations of low socio-economic status (SES) communities. These programs include the Priority Schools Funding Program (PSFP) and the Priority Action Schools (PAS) Program. These programs provide additional assistance to school communities to improve the literacy and numeracy achievement of students in schools with high concentrations of students from low socio-economic status backgrounds.

Abermain PS
Afterlee PS
Airds HS
Albert Park PS
Albury North PS
Albury West PS
Aldavilla PS
Alexandria Park Community
Alma PS
Anson Street School
Argenton PS
Arthur Phillip HS
Ashcroft PS
Ashcroft HS
Ashford Central
Ashmont PS
Athelstane PS
Auburn PS
Auburn Girls HS
Auburn North PS
Auburn West PS
Badgerys Creek PS
Ballina PS
Ballina HS
Balranald Central
Banksia Road PS
Bankstown PS
Bankstown Senior College
Bankstown Girls HS
Barkers Vale PS
Barmedman PS
Barrack Heights PS
Baryulgil PS
Bass HS
Bass Hill PS
Batemans Bay PS
Bellambi PS
Bellata PS
Bellbrook PS
Bellimbopinni PS
Bellingen PS
Belmont PS
Belmont North PS
Belmore Boys HS
Belmore North PS
Bendemeer PS
Bendick Murrell PS
Berkeley PS
Berkeley South PS
Berkeley West PS
Beverley Park School
Bibbenluke PS
Bidwill PS
Binalong PS
Binnaway Central
Biraban PS
Birrong Boys HS
Blackett PS
Blacktown West PS
Blairmount PS
Blaxcell Street PS
Bodalla PS
Bogan Gate PS
Boggabilla Central
Boggabri PS
Bomaderry PS
Bonalbo Central
Bonnyrigg PS
Bonnyrigg HS
Bonshaw PS
Booragul PS
Bourke PS
Bourke HS
Bourke Street PS
Bowen PS
Bowraville Central
Braddock PS
Brewarrina Central
Briar Road PS
Bribbaree PS
Broadwater PS
Broderick Gillawarna School
Broken Hill PS
Broken Hill North PS
Brooke Avenue PS
Brungle PS
Brunswick Heads PS
Budawang School
Bullimbal School
Bundarra Central
Bungwahl PS
Buninyong PS
Burke Ward PS
Busby PS
Cabbage Tree Island PS
Cabramatta PS
Cabramatta HS
Cabramatta West PS
Callaghan College Waratah
Cameron Park School
Campbell House School
Campbellfield PS
Campbelltown PS
Campbelltown East PS
Canley Heights PS
Canley Vale PS
Canley Vale HS
Canowindra PS
Carcoar PS
Carenne School
Carinya School
Carool PS
Carramar PS
Carrington PS
Carroll PS
Cartwright PS
Casino PS
Casino HS
Casino West PS
Cassilis PS
Cessnock PS
Cessnock East PS
Cessnock HS
Cessnock West PS
Chatham PS
Chatham HS
Chester Hill HS
Chifley College Bidwill
Chifley College Dunheved
Chifley College Mount Druitt
Chifley College Senior
Chifley College Shalvey
Chillingham PS
Chullora PS
Claymore PS
Coffee Camp PS
Coffs Harbour PS
Collarenebri Central
Condell Park HS
Congewai PS
Cooma PS
Coonamble PS
Coonamble HS
Coopernook PS
Cooranbong PS
Coraki PS
Coramba PS
Coreen School
Corindi PS
Corrimal HS
Crabbes Creek PS
Crawford PS
Cringila PS
Crystal Creek PS
Cullen Bullen PS
Curran PS
Dareton PS
Darlington Point PS
Dawson PS
Deepwater PS
Doonside PS
Doonside HS
Doubtful Creek PS
Drake PS
Drummond Memorial PS
Dubbo PS
Dubbo College Delroy
Dubbo North PS
Dubbo West PS
Dulwich HS
Dundurrabin PS
Dungay PS
Duranbah PS
Durrumbul PS
Eagle Vale HS
Eden PS
Edgeworth Heights PS
Edward PS
Elands PS
Ellangowan PS
Emerton PS
Emmaville Central
Enngonia PS
Erskineville PS

Ettalong PS
Euabalong West PS
Euchareena PS
Eumungerie PS
Eungai PS
Evans River Community
Fairfield PS
Fairfield Heights PS
Fairfield HS
Fairvale PS
Fairvale HS
Fassifern PS
Fennell Bay PS
Five Islands School
Forbes PS
Forbes North PS
Francis Greenway HS
Frank Partridge VC PS
G S Kidd Memorial School
Galong PS
Ganmain PS
Gardeners Road PS
Gateshead PS
Gateshead West PS
Ghinni Ghinni PS
Gilgai PS
Gilgandra PS
Gillieston PS
Gillwinga PS
Girilambone PS
Glebe PS
Glen Alice PS
Glen Innes West Infants
Glendon School
Glenfield Park School
Glenreagh PS
Glenroi Heights PS
Glenroy PS
Goodooga Central
Goolma PS
Goolmangar PS
Goonellabah PS
Goonengerry PS
Gorokan PS
Goulburn PS
Goulburn South PS
Granville Boys HS
Granville East PS
Granville South PS
Granville South HS
Green Hill PS
Greenacre PS
Greta PS
Grevillia PS
Griffith PS
Guildford PS
Guise PS
Gulargambone Central
Gundagai South PS
Gunnedah PS
Gunnedah HS
Gwabegar PS
Halinda School
Hamilton PS
Hamilton North PS
Hampden Park PS
Hannans Road PS
Hargraves PS
Harrington PS
Harwood Island PS
Hebersham PS
Heckenberg PS
Hermidale PS
Herons Creek PS
Hill End PS
Hillvue PS
Holman Place School
Holroyd HS
HopeTown School
Hume PS
Humula PS
Hunter River Community
Hunter Sports HS
Huntingdon PS
Ilford PS
Illawarra Senior College
Iluka PS
Inverell PS
Irrawang PS
Islington PS
Ivanhoe Central
James Busby HS
James Meehan HS
Jennings PS
Jesmond PS
Jiggi PS
John Warby PS
Johns River PS
Junee PS
Kalinda School
Kanahooka HS
Kandeer School
Katoomba North PS
Keira HS
Kelso PS
Kemblawarra PS
Kemps Creek PS
Kempsey HS
Kempsey South PS
Kempsey West PS
Kinchela PS
Kingscliff PS
Kingswood PS
Kingswood HS
Kingswood Park PS
Kitchener PS
Koonawarra PS
Koorawatha PS
Kotara School
Kurrambee School
Kurri Kurri HS
Kyogle PS
Kyogle HS
La Perouse PS
Lake Cargelligo Central
Lake Heights PS
Lake Illawarra HS
Lakemba PS
Lakeside School
Lalor Park PS
Lansdowne PS
Lansvale PS
Lansvale East PS
Larnook PS
Lawrence PS
Lawrence Hargrave School
Leeville PS
Les Powell School
Lethbridge Park PS
Lewisham PS
Lightning Ridge Central
Lismore PS
Lismore Heights PS
Lismore South PS
Liverpool Boys HS
Liverpool West PS
Lomandra School
Long Flat PS
Lowanna PS
Lurnea PS
Lurnea HS
Macksville HS
Maclean PS
Madang Avenue PS
Main Arm Upper PS
Maitland PS
Mallanganee PS
Manifold PS
Manilla Central
Manning Gardens PS
Marks Point PS
Maroubra Bay PS
Marrickville PS
Marrickville HS
Marsden HS
Martindale PS
Mary Brooksbank School
Matraville Sports HS
Mayfield East PS
Medlow PS
Melville HS
Menindee Central
Merewether PS
Merriwa Central
Metford PS
Millbank PS
Miller PS
Miller Technology HS
Millfield PS
Mingoola PS
Mogo PS
Moorland PS
Moree PS
Moree East PS
Moree Secondary College Carol Ave
Moruya HS
Mount Austin PS
Mount Austin HS
Mount Druitt PS
Mount George PS
Mount Hutton PS
Mount Warrigal PS
Mullumbimby HS
Mumbil PS
Mungindi Central
Murrurundi PS
Murwillumbah PS
Murwillumbah East PS
Muswellbrook South PS
Nabiac PS

Nambucca Heads HS
Nana Glen PS
Nangus PS
Nanima PS
Naradhan PS
Narrandera PS
Newcastle School
Newling PS
Niland School
Nimbin Central
Northlakes PS
Noumea PS
Nowra East PS
Nymboida PS
Nyngan PS
Nyngan HS
Old Bonalbo PS
Old Guildford PS
Orama PS
Orara HS
Pacific Palms PS
Parkview PS
Paxton PS
Peak Hill Central
Peel HS
Pelaw Main PS
Pelican Flat PS
Penrith PS
Penrith South PS
Pilliga PS
Plattsburg PS
Plunkett Street PS
Portland Central
Premer PS
Punchbowl PS
Punchbowl Boys HS
Quambone PS
Railway Town PS
Raleigh PS
Rappville PS
Raymond Terrace PS
Red Range PS
Repton PS
Richmond River HS
Riverstone PS
Riverwood PS
Rookhurst PS
Rosemeadow PS
Rowland Hassall School
Rutherford Technology HS
Rydalmere East PS
Rye Park PS
Sadleir PS
Sanctuary Point PS
Sandy Hollow PS
Sarah Redfern PS
Sarah Redfern HS
Sawtell PS
Scotts Head PS
Shalvey PS
Shoalhaven HS
Shortland PS
Sir Joseph Banks HS
Sofala PS
South Grafton PS
Spencer PS
Springdale Heights PS
St Johns Park PS
St Johns Park HS
St Marys PS
St Marys North PS
St Marys South PS
St Peters PS
Stanford Merthyr Infants
Stockton PS
Stokers Siding PS
Stratford PS
Stratheden PS
Strathfield South HS
Stuart Town PS
Stuarts Point PS
Sussex Inlet PS
Swansea PS
Tabulam PS
Tambar Springs PS
Tamworth West PS
Taree PS
Tarrawanna PS
Telarah PS
Telopea PS
Temora PS
Tempe HS
Tenterfield HS
Teralba PS
The Entrance PS
The Grange PS
The Meadows PS
The Pocket PS
The Risk PS
The Sir Henry Parkes Memorial PS
Thomas Reddall HS
Tighes Hill PS
Tingha PS
Tolland PS
Toomelah PS
Toongabbie East PS
Toronto PS
Towamba PS
Tregear PS
Trunkey PS
Tucabia PS
Tuggerah Lakes Secondary College Tumbi Umbi
Tumbulgum PS
Tweed Heads PS
Tweed Heads South PS
Tweed River HS
Tyalgum PS
Tyalla PS
Uki PS
Ulan PS
Ulmarra PS
Upper Lansdowne PS
Urana Central
Urbenville PS
Urunga PS
Villawood East PS
Villawood North PS
Vincentia HS
Walgett Community College HS
Walgett Community College Primary
Walhallow PS
Wallendbeen PS
Wallsend PS
Wamoon PS
Wanaaring PS
Wangee Park School
Waratah West PS
Wardell PS
Warilla PS
Warilla North PS
Warrawong PS
Warrawong HS
Warwick Farm PS
Wattawa Heights PS
Weilmoringle PS
Wellington PS
Wellington HS
Wentworth PS
Werris Creek PS
Weston PS
Westport PS
Wewak Street School
Whalan PS
Whian Whian PS
White Cliffs PS
Whitton PS
Wilcannia Central
Wiley Park PS
Wiley Park Girls HS
Willawarrin PS
William Bayldon PS
William Rose School
Williamtown PS
Willmot PS
Wilson Park School
Wilsons Creek PS
Windale PS
Windeyer PS
Windsor South PS
Wollar PS
Wollombi PS
Wollongong West PS
Wollumbin HS
Wongarbon PS
Woodberry PS
Woodburn PS
Woodenbong Central
Woodstock PS
Wooli PS
Woolomin PS
Wyoming PS
Wyong PS
Wyong Grove PS
Wytaliba PS
Yamba PS
Yanco PS
Yarramalong PS
Yennora PS

Country Areas Program

The Country Areas Program (CAP) supports students in primary and secondary schools who are educationally disadvantaged by geographical isolation.

Adaminaby PS
Ando PS
Ariah Park Central
Ashford Central
Balranald Central
Baradine Central
Barham HS
Barham PS
Barmedman PS
Barooga PS
Barraba Central
Batlow Technology School
Beckom PS
Bedgerebong PS
Bellata PS
Bellbrook PS
Bemboka PS
Bendick Murrell PS
Berridale PS
Berrigan PS
Bibbenluke PS
Bigga PS
Binalong PS
Bingara Central
Binnaway Central
Blackville PS
Blighty PS
Bogan Gate PS
Boggabilla Central
Boggabri PS
Bombala HS
Bombala PS
Bongongo PS
Bonshaw PS
Booligal PS
Boomi PS
Boorowa Central
Bourke HS
Bourke PS
Bourke Walgett School of Distance Education
Brewarrina Central
Bribbaree PS
Brungle PS
Bullarah PS
Bunnaloo PS
Burcher PS
Buronga PS
Burren Junction PS
Bylong Upper PS
Cabramurra PS
Candelo PS
Caragabal PS
Carinda PS
Carrathool PS
Cassilis PS
Clare PS
Cobar HS
Cobar PS
Cobargo PS
Collarenebri Central
Conargo PS
Condobolin HS
Condobolin PS
Coolah Central
Coomealla HS
Coonabarabran HS
Coonabarabran PS
Coonamble HS
Coonamble PS
Corinella PS
Croppa Creek PS
Dalgety PS
Dareton PS
Deepwater PS
Delegate PS
Delungra PS
Drake PS
Dubbo School of Distance Education
Dunedoo Central
Eden Marine HS
Eden PS
Emmaville Central
Enngonia PS
Euabalong West PS
Euston PS
Fairfax PS
Finley HS
Finley PS
Galong PS
Garah PS
Gilgai PS
Girilambone PS
Gol Gol PS
Goodooga Central
Gravesend PS
Greenethorpe PS
Grenfell PS
Gulargambone Central
Gum Flat PS
Gwabegar PS
Hargraves PS
Hay PS
Hay War Memorial HS
Hermidale PS
Hill End PS
Hillston Central
Ivanhoe Central
Jennings PS
Jerilderie PS
Jindabyne PS
Jugiong PS
Khancoban PS
Koorawatha PS
Lake Cargelligo Central
Lightning Ridge Central
Lord Howe Island Central
Louth PS
Lue PS
Maimuru PS
Mallan PS
Mallawa PS
Marra Creek PS
Mathoura PS
Mayrung PS
Menindee Central
Merimbula PS
Mingoola PS
Moama PS
Monteagle PS
Moulamein PS
Mullaley PS
Mulwala PS
Mungindi Central
Murringo PS
Murrumburrah HS
Murrumburrah PS
Naradhan PS
Nimmitabel PS
North Star PS
Nowendoc PS
Numeralla PS
Nyngan HS
Nyngan PS
Oaklands Central
Old Bonalbo PS
Palinyewah PS
Pallamallawa PS
Pambula PS
Pilliga PS
Pomona PS
Pooncarie PS
Premer PS
Quaama PS
Quambone PS
Quandialla Central
Red Range PS
Reids Flat PS
Rosewood PS
Rowena PS
Rugby PS
Rye Park PS
Savernake PS
School of the Air PS
Stockinbingal PS
Talbingo PS
Tallimba PS
Tambar Springs PS
Tanja PS
Tathra PS
Tenterfield HS
The Henry Lawson HS
The Sir Henry Parkes Memorial PS
Tibooburra Outback School of the Air
Tingha PS
Tocumwal PS
Tooleybuc Central
Toomelah PS
Tooraweenah PS
Tottenham Central
Towamba PS
Trundle Central
Tullamore Central
Tullibigeal Central
Tulloona PS
Tumbarumba HS
Tumbarumba PS
Ulan PS
Ungarie Central
Urana Central
Urbenville PS
Wakool/Burraboi PS
Walgett Community College HS
Walgett Community College Primary
Wallendbeen PS
Wanaaring PS
Warialda HS
Warialda PS
Warren Central
Wee Jasper PS
Wee Waa HS
Wee Waa PS
Weethalle PS
Weilmoringle PS
Wentworth PS
West Wyalong HS
West Wyalong PS
White Cliffs PS
Wilcannia Central
Windeyer PS
Wollar PS
Wolumla PS
Wombat PS
Woodenbong Central
Wyalong PS
Wyangala Dam PS
Wyndham PS
Wytaliba PS
Yarrowitch PS
Yetman PS

Schools Attracting Incentive Benefits

A range of incentive benefits is offered to teachers in many isolated rural locations. Different incentives are offered in different schools. Benefits may include; transfer to a preferred location after completing the required period of service, a retention benefit allowance, compassionate transfer status for teaching partners of teachers appointed to or moving from an incentive school, enhanced leave provisions to enable teachers to attend a personal and family commitments, various locality allowances, additional training and development days; a Teacher Housing Authority rental subsidy and one week's additional summer vacation for schools in the western division of NSW.

Alma Public
Ardlethan Central
Ariah Park Central
Balranald Central
Baradine Central
Barellan Central
Barham High
Barham Public
Beckom Public
Bellata Public
Berrigan Public
Binnaway Central
Blighty Public
Boggabilla Central
Bombala High
Bombala Public
Bonshaw Public
Booligal Public
Boomi Public
Boree Creek Public
Bourke High
Bourke Public
Bourke-Walgett School of Distance Education
Brewarrina Central
Brocklesby Public
Broken Hill High
Broken Hill North Public
Broken Hill Public
Bullarah Public
Bunnaloo Public
Burcher Public
Burke Ward Public
Buronga Public
Burraboi Public *(closed 2008)*
Burren Junction Public
Bylong Upper Public
Cabramurra Public
Carrathool Public School
Carinda Public
Clare Public
Cobar High
Cobar Public
Coleambally Central
Collarenebri Central
Conargo Public
Condobolin High
Condobolin Public
Coomealla High
Coonamble High
Coonamble Public
Croppa Creek Public
Dareton Public
Darlington Point Public
Delegate Public
Deniliquin High
Deniliquin North Public
Deniliquin South Public
Edward Public
Emmaville Central
Enngonia Public
Euabalong West Public
Euston Public
Fairfax Public
Finley High
Finley Public
Garah Public
Girilambone Public
Gol Gol Public
Goodooga Central
Goolgowi Public
Gralee School
Gravesend Public
Gulargambone Central
Gwabegar Public
Hay Public
Hay War Memorial High
Hermidale Public
Hill End Public
Hillston Central
Ivanhoe Central
Jerilderie Public
Khancoban Public
Lake Cargelligo Central
Leeton High
Leeton Public
Lightning Ridge Central
Louth Public
Mallan Public
Mallawa Public
Marra Creek Public *(open 2008)*
Mathoura Public
Mayrung Public
Mendooran Central
Menindee Central
Mingoola Public
Moree East Public
Moree Public
Moree Secondary College Albert St Campus
Moree Secondary College Carol Ave Campus
Morgan Street Public
Moulamein Public
Mungindi Central
Murrami Public
Naradhan Public
Narrandera East Infants
Narrandera High
Narrandera Public
Niangala Public
North Star Public
Nowendoc Public
Nyngan High
Nyngan Public
Oaklands Central
Palinyewah Public
Pallamallawa Public
Parkview Public
Pilliga Public
Pomona Public
Pooncarie Public
Quambone Public
Quandialla Central
Railway Town Public
Rankins Springs Public
Rowena Public
School of the Air
Tallimba Public
Tibooburra Outback School of the Air
Tingha Public
Tooleybuc Central
Toomelah Public
Tottenham Central
Trangie Central
Trundle Central
Tullamore Central
Tullibigeal Central
Tulloona Public
Ungarie Central
Urana Central
Wakool Public
Walgett Community College High
Walgett Community College Public
Walhallow Public
Wamoon Public
Wanaaring Public
Warren Central
Wee Waa High
Wee Waa Public
Weethalle Public
Weilmoringle Public
Wentworth Public
West Wyalong High
West Wyalong Public
White Cliffs Public
Whitton Public
Wilcannia Central
Willyama High
Wollar Public
Wongwibinda Public
Wyalong Public
Wytaliba Public
Yanco Public
Yarrowitch Public
Yetman Public

The Teacher Housing Authority has premises in the following towns. Enquiries regarding availability, size and suitability should be directed to the Teacher Housing Authority (Telephone 1300 137 343).

Town	Premises
Aberdeen	1
Adaminaby	1
Adelong	1
Adjungbilly	1
Ando	1
Ardlethan	7
Ariah Park	6
Ashford	7
Baan Baa	1
Bald Blair Via Guyra	1
Balldale	1
Balranald	28
Baradine	5
Barellan	8
Barham	17
Barmedman	1
Barooga	1
Barraba	7
Baryulgil	1
Batlow	4
Beckom	1
Beelbangera	1
Bellata	2
Bellbrook	1
Bemboka	1
Ben Lomond	1
Bendemeer	1
Bendick Murrell	1
Berridale	1
Berrigan	1
Bibbenluke	1
Bigga	1
Bilbul	1
Bilpin	1
Binalong	1
Bingara	6
Binnaway	6
Binya	1
Black Mountain	1
Black Springs	1
Blackville	1
Blighty Via Finley	1
Bogan Gate	1
Boggabilla	15
Boggabri	2
Bombala	10
Bonalbo	7
Bonshaw	1
Bonville	1
Booligal	1
Boomi	1
Boorowa	6
Boree Creek	1
Bourke	43
Bowning	1
Braidwood	5

Town	Premises
Breadalbane	1
Bredbo	1
Brewarrina	27
Bribbaree	1
Brocklesby	1
Broken Hill	47
Bulahdelah	3
Bullarah Via Moree	2
Bundarra	3
Bungwahl	1
Bunnaloo Via Moama	1
Burcher	1
Buronga	9
Burraboi Via Deniliquin	1
Burren Junction	3
Bylong Upper	1
Byrock	1
Candelo	1
Canowindra	6
Capertee	1
Captains Flat	1
Caragabal	1
Carathool	1
Cargo	1
Carinda	2
Cassilis	1
Chandler Via Wollomombi	1
Clare Via Balranald	1
Cobar	39
Coleambally	14
Collarenebri	13
Collins Creek Via Kyogle	1
Comboyne	1
Condobolin	22
Coolabah	1
Coolah	8
Coonabarabran	14
Coonamble	25
Coorabell Via Bangalow	1
Cootamundra	7
Corindi Beach	1
Corinella Via Forbes	1
Corowa South	1
Cowra	4
Crookwell	3
Croppa Creek	1
Cudal	1
Culcairn	7
Cullen Bullen	1
Cumnock	1
Curlewis	1
Currabubula	1
Dalgety	1
Dareton	5
Darlington Point	1
Deepwater	2

Town	Premises
Delegate	1
Delungra	1
Deniliquin	13
Deniliquin West	4
Denman	3
Dorrigo	1
Drake	1
Dubbo	1
Dundurrabin	1
Dunedoo	12
Dungog	4
Duri	1
Ebenezer	1
Ebor	1
Ellerston Via Scone	2
Emmaville	3
Enngonia	2
Euabalong West	1
Eugowra	1
Eumungerie	1
Eurongilly	1
Euston	4
Fairfax Via Boggabri	1
Finley	13
Forbes	8
Ganmain	1
Garah	2
Geurie	1
Ghinni Ghinni	1
Gilgai	1
Gilgandra	9
Girilambone	1
Glen Alice	1
Glen Innes	5
Glenquarry	1
Glenreagh	1
Gloucester	2
Gol Gol	2
Goodooga	12
Goolgowi	3
Goolma	1
Gravesend	1
Greenthorpe	1
Grenfell	5
Grevillia	1
Griffith	23
Griffith (Jondaryan)	3
Gulargambone	7
Gulgong	5
Gum Flat	1
Gundagai	9
Gunnedah	18
Guyra	1
Gwabegar	2
Hanwood	1
Harden	4

Town	Premises
Hay	26
Henty	3
Hermidale	1
Hernani	1
Hill End	1
Hillston	21
Holbrook	1
Howlong	1
Illabo	1
Iluka	1
Inverell	14
Ivanhoe	8
Jackadgery	1
Jennings	1
Jerangle	1
Jerilderie	1
Jindabyne	4
Junee	7
Kandos	6
Kentucky	1
Khancoban	1
Kingstown	1
Kurmond	1
Laggan	1
Lake Cargelligo	16
Lavington	1
Leeton	13
Lightning Ridge	38
Lockhart	5
Long Flat	1
Lord Howe Island	3
Louth	1
Lower Belford Via Branxton	1
Lue	1
Maimuru	1
Mallan Via Swan Hill	1
Mallanganee	1
Mallawa Via Moree	1
Manildra	1
Manilla	3
Maroota	1
Marra Creek	1
Martindale	1
Mathoura	3
Matong	1
Mayrung Via Deniliquin	1
Meadow Flat	1
Mendooran	5
Menindee	12
Merriwa	4
Michelago	1
Milbrodale	1
Milbrulong	1
Mingoola Via Tenterfield	1
Moama	4
Molong	1

Town	Premises
Monteagle	1
Moonbi	1
Moree	48
Moulamein	7
Mudgee	6
Mullaley	1
Mullengandra	1
Mulwala	1
Mumbil	1
Mummulgum	1
Mungindi	12
Murrami	1
Murrumburrah	2
Nangus	1
Naradhan	1
Narrabri	23
Narrandera	12
Narromine	6
Nevertire	1
Newbridge	1
Niangala	2
Nimmitabel	1
North Star	3
Nowendoc	1
Numeralla	1
Nundle	2
Nymboida	1
Nyngan	19
Nymagee	1
Oaklands	4
Oberon	5
Palinyewah Via Wentworth	1
Pallamallawa	2
Parkes	7
Peak Hill	3
Pearce's Creek	1
Pilliga	1
Pleasant Hills	1
Pomona	1
Pooncarie	1
Portland	4
Premer	1
Quambone	2
Quandialla	5
Quirindi	10
Rand	1
Rankins Springs	1
Rappville	1
Red Range	1
Redhead	1
Reids Flat	1
Repton	1
Rocky River Via Uralla	1
Rookhurst Via Gloucester	1
Rosewood	1
Rouchel	1
Rowena	2
Rugby	1
Rye Park	1

Town	Premises
Rylstone	4
Savernake	1
Spencer	1
Spring Ridge	2
Spring Terrace Via Millthorpe	1
Stockinbingal	1
Stokers Siding	1
Stratford	1
Stroud	1
Stuart Town	1
Stuarts Point	1
Tabulam	1
Talbingo	1
Tallimba	1
Tambar Springs	1
Tarago	1
Taralga	1
Tarcutta	1
Temora	8
Temora West	1
Tenterfield	8
Tharbogang	1
The Risk	1
The Rock	1
Tibooburra	4
Tingha	1
Tintinhull	1
Tocumwal	1
Tooleybuc	8
Tooraweenah	1
Tottenham	7
Trangie	9
Trundle	5
Tullamore	5
Tullibigeal	5
Tulloona	1
Tumbarumba	10
Tumut	5
Tyalgum	1
Ulan	1
Ulong	1
Ungarie	9
Urana	5
Urbenville	1
Wakool	2
Walbundrie	1
Walcha	6
Walgett	55
Walla Walla	3
Wallabadah	1
Wallendbeen	1
Wambangalang	1
Wamoon	1
Wanaaring	1
Warialda	6
Warren	12
Wauchope	1
Wee Jasper	1

Town	Premises
Wee Waa	18
Weethalle	1
Weilmoringle	1
Wellington	5
Wentworth	7
Werris Creek	1
West Wyalong	12
Whian Whian	1
White Cliffs	2
Whitton	1
Wilcannia	17
Willow Tree	1
Windellama	1
Windeyer	1
Wollar	1
Wollombi	1
Wombat	1
Wongwibinda Via Wollomombi	1
Woodenbong	8
Woolbrook	1
Wooli	1
Woolomin	1
Wyalong	1
Wyangala Dam	1
Wytaliba Via Glen Innes	1
Yanco	1
Yarrowitch	1
Yass	4
Yenda	1
Yeoval	4
Yerong Creek	1
Yetman	1
Yoogali	1
Young	5
Zig Zag Via Lithgow	1

Public School Enrolments August 2007

The student enrolments listed below were collected in the census of students in NSW government schools undertaken on Friday, 3 August 2007 and form part of the National School Statistics Collection. Please note that enrolment figures listed below can vary during the year or from year to year. Enrolment figures given are FTE (Full Time Equivalent) and may not reflect actual head count. The schools listed are those schools open as at August 2007.

Name	No.
Abbotsford	307
Aberdeen	190
Abermain	239
Adaminaby	29
Adamstown	243
Adelong	78
Afterlee	9
Albert Park	54
Albion Park	617
Albion Park Rail	527
Albury	591
Albury North	220
Albury West	160
Aldavilla	253
Alfords Point	227
Allambie Heights	376
Alma	300
Alstonville	546
Ambarvale	318
Ando	11
Anna Bay	442
Annandale	206
Annandale North	334
Annangrove	107
Appin	189
Arcadia	130
Arcadia Vale	115
Argenton	82
Armidale City	378
Arncliffe	408
Arncliffe West Infants	50
Artarmon	691
Ashbury	348
Ashcroft	255
Ashfield	235
Ashmont	330
Ashtonfield	255
Asquith	290
Athelstane	380
Attunga	38
Auburn	772
Auburn North	664
Auburn West	684
Austinmer	286
Austral	381
Australia Street Infants	99
Avalon	830
Avoca	33
Avoca Beach	409
Awaba	33
Badgerys Creek	37
Balarang	398
Bald Blair	27
Bald Face	249
Balgowlah Heights	600
Balgowlah North	418
Balgownie	308
Balldale	9
Ballimore	24
Ballina	312
Balmain	167
Bangalow	263
Bangor	618
Banks	419
Banksia Road	327
Banksmeadow	228
Bankstown	912
Bankstown North	348
Bankstown South Infants	61
Bankstown West	210
Banora Point	532
Bardwell Park Infants	65
Bargo	303
Barham	190
Barkers Vale	64
Barmedman	15
Barnier	576
Barnsley	305
Barooga	157
Barrack Heights	317
Barrington	61
Baryulgil	14
Bass Hill	351
Bateau Bay	719
Batemans Bay	487
Bathurst	352
Bathurst South	225
Bathurst West	363
Baulkham Hills North	557
Beacon Hill	489
Beaumont Hills	580
Beaumont Road	290
Beauty Point	221
Beckom	11
Bedgerebong	32
Beechwood	130
Beecroft	754
Beelbangera	172
Bega	173
Bega West	237
Belair	444
Bellambi	276
Bellata	41
Bellbird	271
Bellbrook	37
Bellevue Hill	429
Bellimbopinni	30
Bellingen	309
Belltrees	17
Belmont	325
Belmont North	166
Belmore North	326
Belmore South	348
Belrose	441
Bemboka	56
Ben Lomond	8
Ben Venue	574
Bendemeer	14
Bendick Murrell	9
Bennett Road	499
Berala	1135
Beresfield	329
Beresford Road	389
Berinba	260
Berkeley	333
Berkeley South	72
Berkeley Vale	721
Berkeley West	174
Bermagui	177
Berowra	406
Berridale	91
Berrigan	97
Berrima	93
Berry	267
Bert Oldfield	288
Beverly Hills	495
Beverly Hills North	615
Bexhill	109
Bexley	422
Bexley North	388
Bibbenluke	13
Biddabah	382
Bidwill	489
Bigga	13
Bilambil	335
Bilbul	27
Bilgola Plateau	420
Bilpin	109
Binalong	21
Binda	5
Binya	10
Biraban	162
Birchgrove	318
Birrong	448
Black Hill	57
Black Mountain	31
Black Springs	27
Blackalls Park	218
Blackett	315
Blackheath	265
Blacksmiths	123
Blacktown North	103
Blacktown South	801
Blacktown West	463
Blackville	14
Blackwell	500
Blairmount	535
Blakebrook	66
Blakehurst	390
Blandford	36
Blaxcell Street	781
Blaxland	167
Blaxland East	351
Blayney	296
Bletchington	547
Bligh Park	462
Blighty	27
Blue Haven	608
Boambee	335
Bobin	21
Bobs Farm	21
Bodalla	165
Bogan Gate	32
Bogangar	301
Boggabri	105
Bolwarra	297
Bomaderry	318
Bombala	144
Bondi	74
Bondi Beach	223
Bongongo	9
Bonnells Bay	386
Bonnet Bay	135
Bonnyrigg	214
Bonnyrigg Heights	677
Bonshaw	10
Bonville	109
Boolaroo	50
Booligal	6
Boomi	31
Booragul	244
Booral	89

Name	No.
Boree Creek	21
Borenore	20
Boronia Park	379
Bossley Park	331
Botany	179
Bourke	205
Bourke Street	62
Bourke-Walgett	81
Bowen	225
Bowning	46
Bowral	524
Bradbury	669
Braddock	272
Bradfordville	225
Branxton	337
Breadalbane	18
Bredbo	32
Briar Road	367
Bribbaree	21
Brighton-Le-Sands	631
Bringelly	107
Brisbania	423
Broadwater	42
Brocklesby	20
Broke	32
Broken Hill	222
Broken Hill North	317
Bronte	406
Brooke Avenue	457
Brooklyn	77
Brookvale	194
Broulee	351
Brungle	27
Brunswick Heads	201
Budgewoi	622
Bullarah	5
Bulli	189
Bundanoon	137
Bundeena	147
Bungendore	461
Bungwahl	40
Buninyong	281
Bunnaloo	62
Burcher	10
Burke Ward	373
Burnside	217
Buronga	94
Burraneer Bay	624
Burrawang	33
Burren Junction	40
Burringbar	115
Burrumbuttock	38
Burwood	628
Busby	324
Busby West	561

Name	No.
Buxton	205
Byabarra	21
Bylong Upper	8
Byron Bay	569
Cabbage Tree Island	27
Cabramatta	694
Cabramatta West	579
Cabramurra	11
Caddies Creek	700
Calare	657
Callala	305
Cambewarra	270
Cambridge Gardens	334
Cambridge Park	488
Camden	309
Camden South	433
Camdenville	170
Cammeray	632
Campbellfield	288
Campbelltown	284
Campbelltown East	298
Campbelltown North	396
Campsie	614
Candelo	91
Caniaba	78
Canley Heights	572
Canley Vale	804
Canobolas	77
Canowindra	181
Canterbury	292
Canterbury South	166
Capertee	11
Captains Flat	29
Caragabal	6
Carcoar	14
Cardiff	169
Cardiff North	155
Cardiff South	321
Cargo	19
Carinda	14
Caringbah	250
Caringbah North	451
Carlingford	304
Carlingford West	686
Carlton	940
Carlton South	533
Carool	40
Carramar	255
Carrathool	9
Carrington	80
Carroll	14
Cartwright	214
Casino	582
Casino West	315
Cassilis	10

Name	No.
Castle Cove	376
Castle Hill	793
Castlereagh	82
Casula	660
Cattai	62
Caves Beach	365
Cawdor	115
Cecil Hills	555
Centaur	610
Central Mangrove	104
Central Tilba	32
Cessnock	357
Cessnock East	186
Cessnock West	378
Chandler	29
Charlestown	206
Charlestown East	259
Charlestown South	179
Chatham	307
Chatswood	694
Chatsworth Island	95
Cherrybrook	664
Chertsey	198
Chester Hill	610
Chester Hill North	554
Chifley	219
Chillingham	39
Chipping Norton	211
Chittaway Bay	419
Chullora	326
Clairgate	447
Clare	7
Claremont Meadows	453
Clarence Town	176
Claymore	343
Clemton Park	535
Clergate	53
Clovelly	573
Clunes	133
Coal Point	269
Cobar	288
Cobargo	132
Cobbitty	171
Coffee Camp	59
Coffs Harbour	322
Coledale	72
Collaroy Plateau	436
Collector	22
Collingullie	65
Collins Creek	13
Colo Heights	38
Colo Vale	252
Colyton	608
Comboyne	27
Comleroy Road	180

Name	No.
Como	69
Como West	305
Conargo	30
Concord	236
Concord West	280
Condell Park	420
Condobolin	337
Condong	81
Congewai	12
Coniston	210
Connells Point	488
Cooerwull	387
Coogee	508
Coolongolook	32
Cooma	229
Cooma North	323
Coonabarabran	359
Coonamble	222
Coopernook	80
Coorabell	87
Cooranbong	201
Cootamundra	241
Copacabana	271
Copmanhurst	81
Coraki	144
Coramba	61
Corindi	126
Corinella	28
Corndale	27
Corowa	371
Corowa South	67
Corrimal	185
Corrimal East	302
Coutts Crossing	108
Cowan	79
Cowper	20
Cowra	424
Crabbes Creek	36
Crawford	647
Crescent Head	218
Crestwood	620
Cringila	146
Cromer	722
Cronulla	98
Cronulla South	290
Crookwell	153
Croppa Creek	11
Crossmaglen	13
Crowdy Head	10
Crown Street	252
Croydon	632
Croydon Park	355
Crystal Creek	76
Cudal	55
Cudgegong Valley	528

Name	No.
Cudgen	149
Culburra	222
Culcairn	101
Cullen Bullen	29
Cumnock	41
Cundletown	259
Curl Curl North	605
Curlewis	70
Currabubula	30
Curran	215
Currans Hill	473
Daceyville	301
Dalgety	25
Dalmeny	692
Dalton	27
Dapto	698
Darcy Road	285
Dareton	124
Darlinghurst	112
Darlington	219
Darlington Point	88
Dawson	347
Dee Why	222
Deepwater	50
Delegate	50
Delungra	25
Deniliquin North	180
Deniliquin South	245
Denistone East	773
Denman	190
Dobroyd Point	238
Doonside	160
Dooralong	25
Dora Creek	136
Dorrigo	176
Double Bay	334
Doubtful Creek	12
Douglas Park	157
Drake	36
Drinane	5
Drummond Memorial	85
Drummoyne	554
Dubbo	362
Dubbo North	293
Dubbo South	733
Dubbo West	426
Dudley	222
Dulwich Hill	504
Dundas	382
Dundurrabin	29
Dungay	79
Dungog	263
Dungowan	50
Dunoon	67
Dural	396

Name	No.
Duranbah	48
Duri	34
Durrumbul	71
E A Southee	246
Earlwood	548
East Hills	148
Eastern Creek	244
Eastlakes	201
Eastwood	658
Eastwood Heights	349
Ebenezer	118
Ebor	8
Eden	268
Edensor Park	299
Edgeworth	500
Edgeworth Heights	259
Edward	255
Eglinton	378
Elands	12
Elanora Heights	481
Eleebana	472
Elermore Vale	346
Ellalong	112
Ellangowan	29
Ellerston	18
Ellison	348
Eltham	69
Emerton	260
Empire Bay	399
Empire Vale	53
Emu Heights	308
Emu Plains	371
Enfield	249
Engadine	267
Engadine West	676
Enngonia	17
Epping	360
Epping Heights	351
Epping North	360
Epping West	637
Eraring	39
Erina Heights	318
Ermington	408
Ermington West	152
Errowanbang	9
Erskineville	225
Eschol Park	436
Ettalong	668
Euabalong West	15
Euchareena	14
Eugowra	31
Eumungerie	12
Eungai	80
Eureka	35
Eurongilly	12

Name	No.
Euston	77
Excelsior	406
Exeter	89
Fairfax	14
Fairfield	636
Fairfield Heights	841
Fairfield West	618
Fairvale	565
Fairy Meadow	435
Falls Creek	73
Farmborough Road	236
Fassifern	70
Faulconbridge	342
Fennell Bay	274
Fern Bay	36
Ferncourt	309
Fernleigh	37
Figtree	308
Figtree Heights	207
Fingal Head	57
Finley	218
Five Dock	300
Five Mile Tree	5
Flinders	568
Floraville	545
Forbes	405
Forbes North	224
Forest Hill	217
Forest Lodge	286
Forestville	373
Forster	711
Fort Street	64
Frank Partridge VC	240
Franklin	242
Frederickton	158
Freemans Reach	244
Frenchs Forest	250
Galong	7
Galston	162
Ganmain	35
Garah	26
Garden Suburb	274
Gardeners Road	181
Gateshead	151
Gateshead West	111
Georges Hall	765
Gerogery	16
Gerringong	377
Geurie	32
Ghinni Ghinni	5
Gilgai	30
Gilgandra	249
Gillieston	88
Gillwinga	217
Girilambone	16

Name	No.
Girraween	517
Gladesville	360
Gladstone	48
Glebe	94
Glen Alice	9
Glen Innes	450
Glen Innes West Infants	55
Glen William	34
Glenbrook	266
Glendale East	191
Glendenning	493
Glendore	405
Glenfield	306
Glenhaven	333
Glenmore Park	607
Glenmore Road	295
Glenorie	191
Glenquarry	42
Glenreagh	93
Glenroi Heights	238
Glenroy	197
Glenwood	275
Glossodia	229
Gloucester	282
Gol Gol	197
Goolgowi	76
Goolma	7
Goolmangar	33
Gooloogong	30
Goonellabah	248
Goonengerry	63
Gordon East	279
Gordon West	411
Gorokan	575
Gosford	531
Gosford East	328
Goulburn	143
Goulburn East	80
Goulburn North	278
Goulburn South	189
Goulburn West	307
Governor Philip King	746
Grafton	717
Grahamstown	378
Granville	518
Granville East	353
Granville South	159
Gravesend	28
Grays Point	328
Green Hill	31
Green Valley	512
Greenacre	719
Greenethorpe	22
Greenway Park	762

Name	No.
Greenwell Point	81
Greenwich	347
Grenfell	173
Gresford	87
Greta	208
Grevillia	11
Greystanes	424
Griffith	346
Griffith East	438
Griffith North	455
Grong Grong	13
Grose View	380
Guildford	380
Guildford West	487
Guise	221
Gulgong	254
Gulmarrad	208
Gum Flat	38
Gundagai	197
Gundagai South	50
Gundaroo	82
Gunnedah	198
Gunnedah South	464
Gunning	61
Gwabegar	26
Gwandalan	433
Gwynneville	162
Gymea Bay	767
Gymea North	299
Haberfield	596
Hallidays Point	244
Hambledon	555
Hamilton	233
Hamilton North	114
Hamilton South	369
Hammondville	456
Hampden Park	720
Hampton	12
Hannam Vale	16
Hannans Road	210
Hanwood	209
Harbord	802
Harcourt	657
Hargraves	24
Harrington	84
Harrington Park	690
Harrington Street	814
Harwood Island	41
Hassall Grove	800
Hastings	466
Hay	328
Hayes Park	483
Hazelbrook	463
Heathcote	268
Heathcote East	172

Name	No.
Heaton	171
Hebersham	626
Heckenberg	261
Helensburgh	451
Henry Fulton	271
Henty	98
Hermidale	17
Hernani	9
Herons Creek	11
Hill End	16
Hill Top	237
Hillsborough	263
Hillside	52
Hilltop Road	588
Hillvue	333
Hinchinbrook	631
Hinton	114
Hobartville	497
Holbrook	160
Holgate	164
Holmwood	38
Holsworthy	650
Homebush	567
Homebush West	337
Hornsby Heights	310
Hornsby North	549
Hornsby South	364
Horsley Park	93
Howlong	177
Hoxton Park	633
Hume	155
Humula	11
Hunters Hill	356
Huntingdon	27
Hurstville	1107
Hurstville Grove Infants	72
Hurstville South	447
Huskisson	152
Ilford	27
Illabo	24
Illaroo Road	548
Illawong	247
Iluka	136
Ingleburn	546
Ingleburn North	141
Inverell	362
Iona	39
Ironbark Ridge	187
Irrawang	280
Islington	66
Jamberoo	163
James Erskine	620
Jamisontown	347
Jannali	118

Name	No.
Jannali East	188
Jasper Road	631
Jennings	24
Jerangle	6
Jerilderie	70
Jerrabomberra	737
Jerrys Plains	34
Jesmond	187
Jewells	496
Jiggi	45
Jilliby	128
Jindera	193
John Purchase	565
John Warby	293
Johns River	18
Jugiong	12
Junee	169
Junee North	150
Kahibah	245
Kambora	230
Kandos	222
Kangaloon	12
Kangaroo Valley	85
Kanwal	744
Kapooka	48
Karangi	86
Kareela	372
Kariong	702
Karuah	103
Katoomba	275
Katoomba North	177
Kearns	200
Kearsley	145
Kegworth	308
Keiraville	232
Kellys Plains	39
Kellyville	551
Kellyville Ridge	469
Kelso	285
Kemblawarra	83
Kemps Creek	172
Kempsey East	285
Kempsey South	166
Kempsey West	354
Kendall	229
Kensington	395
Kent Road	215
Kenthurst	160
Kentlyn	122
Kentucky	42
Khancoban	14
Kiama	368
Killara	218
Killarney Heights	497
Killarney Vale	423

Name	No.
Kinchela	34
Kincumber	559
King Park	583
King Street	485
Kings Langley	638
Kingscliff	368
Kingsgrove	678
Kingstown	27
Kingswood	286
Kingswood Park	119
Kingswood South	278
Kirkton	55
Kirrawee	281
Kitchener	83
Kogarah	356
Koonawarra	377
Koorawatha	28
Kooringal	397
Kootingal	175
Kororo	591
Kotara South	170
Krambach	44
Kulnura	73
Kurmond	162
Kurnell	159
Kurrajong	168
Kurrajong East	137
Kurrajong North	85
Kurri Kurri	732
Kyeemagh Infants	63
Kyogle	314
La Perouse	45
Ladysmith	29
Laggan	43
Laguna	39
Laguna Street	390
Lake Albert	358
Lake Heights	143
Lake Illawarra South	263
Lake Munmorah	559
Lake Wyangan	81
Lakelands	310
Lakemba	343
Lalor Park	171
Lambton	328
Lane Cove	772
Lane Cove West	285
Lansdowne	74
Lansvale	560
Lansvale East	134
Lapstone	194
Largs	64
Larnook	43
Laurieton	202
Lavington	400

Name	No.
Lavington East	296
Lawrence	82
Lawson	196
Leeton	425
Leeville	70
Leichhardt	300
Lennox Head	364
Leonay	216
Leppington	123
Lethbridge Park	407
Leumeah	537
Leura	319
Lewisham	105
Lidcombe	567
Lilli Pilli	406
Limbri	8
Lindfield	649
Lindfield East	714
Lindsay Park	267
Lisarow	277
Lismore	290
Lismore Heights	245
Lismore South	288
Lithgow	457
Liverpool	655
Liverpool West	497
Llandilo	274
Lochinvar	60
Loftus	394
Londonderry	188
Long Flat	32
Louth	8
Lowanna	18
Lowesdale	10
Luddenham	77
Lue	17
Lugarno	341
Lurnea	490
Lyndhurst	28
Lynwood Park	257
Macdonald Valley	5
Macksville	381
Maclean	204
Macquarie Fields	668
Madang Avenue	359
Maimuru	40
Main Arm Upper	52
Maitland	360
Maitland East	584
Malabar	267
Mallan	12
Mallanganee	11
Mallawa	25
Mandurama	26
Mangoplah	26
Manifold	26
Manildra	36
Manly Vale	206
Manly Village	432
Manly West	635
Mannering Park	346
Manning Gardens	192
Maraylya	87
Marayong	523
Marayong Heights	346
Marayong South	301
Marks Point	191
Maroota	59
Maroubra Bay	77
Maroubra Junction	550
Marra Creek	4
Marrar	27
Marrickville	151
Marrickville West	212
Marsden Park	83
Marsden Road	568
Martindale	12
Martins Creek	8
Martins Gully	164
Marton	336
Marulan	98
Maryland	459
Mascot	444
Mathoura	70
Matong	33
Matraville	257
Matraville Soldiers Settlement	262
Matthew Pearce	880
Mawarra	391
Mayfield East	191
Mayfield West	303
Mayrung	26
McCallums Hill	469
Meadow Flat	29
Meadowbank	191
Medlow	18
Medowie	293
Megalong	16
Melrose Park	111
Menai	250
Merewether	188
Merewether Heights	251
Merimbula	444
Merrylands	319
Merrylands East	404
Metella Road	527
Metford	369
Michelago	30
Middle Dural	56
Middle Harbour	383
Middleton	310
Milbrodale	22
Milbrulong	9
Millbank	30
Miller	325
Millers Forest	20
Millfield	51
Millthorpe	158
Milperra	221
Milton	581
Mimosa	226
Minchinbury	594
Mingoola	20
Minmi	116
Minnamurra	426
Minto	188
Miranda	255
Miranda North	246
Mitchells Island	48
Mittagong	369
Moama	226
Modanville	117
Mogo	68
Mona Vale	854
Monteagle	41
Moonbi	38
Moorland	57
Moree	520
Moree East	220
Morgan Street	355
Morisset	218
Morpeth	171
Mortdale	347
Mortlake	252
Moruya	421
Mosman	591
Moss Vale	602
Moulamein	57
Mount Annan	592
Mount Austin	310
Mount Brown	417
Mount Colah	394
Mount Druitt	435
Mount George	34
Mount Hunter	49
Mount Hutton	166
Mount Kanwary	51
Mount Keira	64
Mount Kembla	152
Mount Kuring-gai	167
Mount Lewis Infants	86
Mount Ousley	162
Mount Pleasant	59
Mount Pritchard	458
Mount Pritchard East	261
Mount Riverview	157
Mount St Thomas	310
Mount Terry	665
Mount Victoria	114
Mount Warrigal	333
Mowbray	265
Mudgee	476
Mulbring	98
Mulgoa	65
Mullaley	41
Mullaway	178
Mullengandra	21
Mullion Creek	32
Mullumbimby	294
Mulwala	85
Mulyan	353
Mumbil	16
Mummulgum	30
Murrami	34
Murray Farm	876
Murringo	27
Murrumburrah	165
Murrurundi	67
Murwillumbah	272
Murwillumbah East	340
Murwillumbah South Infants	26
Muswellbrook	611
Muswellbrook South	400
Nabiac	242
Nambucca Heads	258
Nana Glen	138
Nangus	14
Nanima	9
Naradhan	13
Narara	337
Nareena Hills	255
Narellan	243
Narellan Vale	821
Narooma	383
Narrabeen Lakes	255
Narrabeen North	342
Narrabri	334
Narrabri West	243
Narrandera	245
Narrandera East Infants	62
Narranga	585
Narraweena	411
Narromine	416
Narwee	223
Nashdale	71
Nemingha	163
Neutral Bay	643
Neville	18

Name	No.
New Lambton	578
New Lambton Heights Infants	58
New Lambton South	311
Newbridge	15
Newbridge Heights	536
Newcastle East	191
Newington	332
Newling	171
Newport	753
Newrybar	41
Newtown	228
Newtown North	209
Niagara Park	555
Niangala	11
Nicholson Street	126
Nillo Infants	48
Nimmitabel	27
Nords Wharf	80
Normanhurst	288
Normanhurst West	363
North East	147
North Haven	410
North Nowra	231
North Rocks	612
North Ryde	224
North Star	47
North Sydney	566
North Wagga	208
Northbridge	437
Northlakes	567
Northmead	558
Noumea	452
Nowendoc	13
Nowra	589
Nowra East	285
Nowra Hill	91
Nulkaba	398
Numeralla	15
Nundle	39
Nuwarra	303
Nymboida	29
Nyngan	177
Oak Flats	503
Oakdale	160
Oakhill Drive	636
Oakville	376
Oatlands	252
Oatley	334
Oatley West	443
Oberon	266
Ocean Shores	310
O'Connell	68
Old Bar	284
Old Bonalbo	25

Name	No.
Old Guildford	229
Orama	26
Orana Heights	547
Orange	712
Orange East	239
Orange Grove	133
Orara Upper	42
Orchard Hills	76
Otford	66
Ourimbah	487
Oxley Island	38
Oxley Park	449
Oxley Vale	278
Oyster Bay	369
Pacific Palms	212
Paddington	312
Padstow Heights	389
Padstow North	258
Padstow Park	331
Pagewood	182
Palinyewah	28
Pallamallawa	41
Palmers Island	78
Pambula	297
Panania	402
Panania North	318
Parkes	522
Parkes East	266
Parklea	611
Parkview	194
Parramatta	484
Parramatta East	231
Parramatta North	241
Parramatta West	511
Paterson	108
Paxton	59
Peakhurst	424
Peakhurst South	308
Peakhurst West	375
Pearces Creek	20
Peats Ridge	37
Pelaw Main	162
Pelican Flat	94
Pendle Hill	187
Pennant Hills	508
Penrith	402
Penrith South	373
Penrose	11
Penshurst	431
Penshurst West	328
Perthville	87
Petersham	190
Picnic Point	350
Picton	428
Pilliga	6

Name	No.
Pitt Town	137
Plattsburg	238
Pleasant Heights	170
Pleasant Hills	22
Plumpton	530
Plunkett Street	35
Point Clare	411
Pomona	38
Pooncarie	17
Port Kembla	203
Port Macquarie	519
Pottsville Beach	448
Prairievale	492
Premer	6
Prestons	544
Pretty Beach	164
Primbee	91
Punchbowl	592
Putney	390
Pymble	527
Quaama	68
Quakers Hill	660
Quakers Hill East	606
Quambone	22
Queanbeyan	725
Queanbeyan East	140
Queanbeyan South	477
Queanbeyan West	406
Quirindi	320
Raglan	188
Railway Town	169
Rainbow Street	251
Raleigh	60
Ramsgate	509
Rand	23
Randwick	534
Rankins Springs	15
Rappville	21
Rathmines	284
Raymond Terrace	408
Red Range	41
Redhead	194
Regents Park	318
Regentville	555
Reids Flat	7
Repton	84
Revesby	280
Revesby South	315
Richmond	263
Richmond North	220
Ringrose	277
Riverstone	259
Riverwood	101
Robert Townson	572
Robertson	156

Name	No.
Rockdale	459
Rockley	20
Rocky River	25
Rollands Plains Upper	24
Rookhurst	8
Rooty Hill	579
Rose Bay	413
Rosebank	67
Rosehill	420
Roselea	396
Rosemeadow	592
Roseville	594
Rosewood	10
Ross Hill	683
Rossmore	144
Rouchel	5
Rous	88
Rouse Hill	652
Rowena	25
Rozelle	329
Rugby	6
Rukenvale	31
Ruse	323
Russell Lea Infants	128
Russell Vale	299
Rutherford	585
Rydalmere	144
Rydalmere East	158
Ryde	465
Ryde East	372
Rye Park	30
Rylstone	79
Sackville Street	665
Sadleir	287
Salt Ash	85
Samuel Gilbert	565
Samuel Terry	496
Sanctuary Point	475
Sandon	215
Sandy Beach	378
Sandy Hollow	41
Sans Souci	486
Sarah Redfern	383
Savernake	15
Sawtell	252
Scarborough	88
Schofields	271
School of the Air	121
Scone	461
Scotts Head	70
Seaforth	370
Seaham	236
Sefton Infants	53
Seven Hills	131

Name	No.
Seven Hills North	175
Seven Hills West	357
Shalvey	515
Shell Cove	226
Shelley	593
Shellharbour	455
Sherwood Grange	263
Sherwood Ridge	553
Shoal Bay	285
Shoalhaven Heads	178
Shortland	278
Singleton	512
Singleton Heights	587
Smithfield	477
Smithfield West	391
Smithtown	78
Sofala	8
Soldiers Point	292
Somersby	88
Somerton	40
South Coogee	532
South Grafton	576
South Wagga	308
South West Rocks	315
Speers Point	170
Spencer	10
Spring Hill	31
Spring Ridge	34
Spring Terrace	33
Springdale Heights	166
Springwood	345
St Andrews	801
St Clair	284
St Georges Basin	368
St Helens Park	418
St Ives	353
St Ives North	646
St Ives Park	180
St Johns Park	801
St Marys	192
St Marys North	382
St Marys South	273
St Peters	57
Stanford Merthyr Infants	68
Stanmore	477
Stanwell Park	169
Stockinbingal	37
Stockton	275
Stokers Siding	57
Stratford	15
Stratheden	27
Strathfield North	561
Strathfield South	825
Stroud	83
Stroud Road	27
Stuart Town	7
Stuarts Point	57
Sturt	322
Summer Hill	705
Sunshine Bay	427
Surveyors Creek	451
Sussex Inlet	289
Sutherland	216
Sutherland North	195
Sutton	129
Sutton Forest	31
Swansea	235
Sydney Distance Education Primary	158
Sylvania	147
Sylvania Heights	516
Table Top	42
Tabulam	78
Tacking Point	750
Tacoma	169
Tahmoor	355
Talbingo	11
Tallimba	30
Tallong	26
Tambar Springs	12
Tamworth	614
Tamworth South	677
Tamworth West	192
Tanilba Bay	489
Tanja	20
Tarago	42
Taralga	71
Tarcutta	52
Taree	128
Taree West	461
Taren Point	113
Tarrawanna	149
Tarro	130
Tathra	177
Taverners Hill Infants	83
Tea Gardens	218
Telarah	534
Telegraph Point	102
Telopea	112
Temora	236
Temora West	150
Tempe	176
Tenambit	350
Teralba	81
Terara	88
Terranora	359
Terrey Hills	271
Terrigal	588
Teven-Tintenbar	157
Tharawal	308
Tharbogang	45
The Channon	33
The Entrance	523
The Grange	228
The Junction	522
The Lagoon	17
The Meadows	253
The Oaks	329
The Pocket	50
The Risk	32
The Sir Henry Parkes Memorial	255
Thirlmere	420
Thirroul	321
Thomas Acres	569
Thornleigh West	533
Thornton	650
Thurgoona	343
Tibooburra Outback School of the Air	20
Tighes Hill	171
Timbumburi	115
Tingha	110
Tinonee	188
Tintinhull	52
Tirranna	15
Tocumwal	105
Tolland	245
Tomaree	392
Tomerong	149
Toomelah	56
Toongabbie	527
Toongabbie East	71
Toongabbie West	201
Tooraweenah	18
Toormina	461
Toronto	201
Toukley	493
Towamba	35
Tower Street	211
Towradgi	91
Tregeagle	115
Tregear	372
Trunkey	8
Truscott Street	321
Tucabia	88
Tuggerah	405
Tuggerawong	270
Tulloona	7
Tumbarumba	197
Tumbulgum	57
Tumut	315
Tuncurry	428
Tuntable Creek	29
Turramurra	472
Turramurra North	317
Turvey Park	362
Tweed Heads	240
Tweed Heads South	218
Tyalgum	73
Tyalla	406
Uki	173
Ulan	32
Ulladulla	652
Ulmarra	58
Ulong	43
Ultimo	261
Umina	747
Unanderra	530
Undercliffe	160
Upper Coopers Creek	20
Upper Lansdowne	18
Uranquinty	60
Urbenville	26
Urunga	294
Vacy	78
Valentine	495
Valley View	542
Vardys Road	497
Vaucluse	233
Villawood East	259
Villawood North	323
Vincentia	359
Vineyard	66
Wagga Wagga	355
Wahroonga	650
Waitara	582
Wakehurst	319
Wakool	30
Walbundrie	20
Walgett Community College Primary	113
Walhallow	16
Walla Walla	35
Wallabadah	50
Wallacia	93
Wallendbeen	13
Wallerawang	223
Wallsend	231
Wallsend South	568
Walters Road	521
Wamberal	514
Wamoon	39
Wanaaring	12
Wangi Wangi	142
Waniora	285
Waratah	458
Waratah West	89
Wardell	56
Warialda	158

Name	No.
Warilla	281
Warilla North	118
Warners Bay	388
Warnervale	269
Warragamba	382
Warrawee	354
Warrawong	298
Warrimoo	175
Warwick Farm	232
Waterfall	29
Wattawa Heights	249
Wattle Flat	13
Wattle Grove	644
Wauchope	738
Waverley	135
Wee Jasper	10
Wee Waa	182
Weethalle	52
Weilmoringle	13
Wellington	477
Wentworth	123
Wentworth Falls	404
Wentworthville	348
Werrington	365
Werrington County	301
Werris Creek	87
West Pennant Hills	462
West Pymble	328
West Ryde	295
West Wallsend	209
West Wyalong	245
Westdale	376
Westlawn	438
Westmead	855
Weston	183
Westport	377
Whalan	420
Wheeler Heights	499
Whian Whian	13
White Cliffs	9
Whitton	63
Wiangaree	23
Widemere	290
Wideview	338
Wilberforce	274
Wiley Park	507
Wilkins	423
Willawarrin	82
William Bayldon	234
William Dean	350
William Stimson	530
Williamtown	18
Willmot	233
Willoughby	767
Willow Tree	50

Name	No.
Wilsons Creek	55
Windale	239
Windang	206
Windellama	33
Windeyer	13
Windsor	217
Windsor Park	302
Windsor South	155
Wingello	25
Wingham	393
Wingham Brush	325
Winmalee	363
Winston Heights	320
Winston Hills	513
Wirreanda	588
Wisemans Ferry	61
Wollar	14
Wollombi	6
Wollondilly	417
Wollongbar	239
Wollongong	306
Wollongong West	178
Wolumla	56
Wombat	30
Wongarbon	59
Wongwibinda	11
Woodberry	246
Woodburn	122
Woodford Dale	14
Woodland Road	286
Woodport	443
Woodstock	11
Woolbrook	19
Woolgoolga	331
Wooli	47
Woollahra	572
Woolomin	30
Woolooware	373
Woongarrah	330
Woonona	348
Woonona East	325
Woronora River	161
Woy Woy	452
Woy Woy South	649
Wyalong	57
Wyangala Dam	9
Wyee	238
Wyndham	38
Wyoming	293
Wyong	361
Wyong Creek	30
Wyong Grove	161
Wyrallah	43
Wyrallah Road	513
Wytaliba	5

Name	No.
Yagoona	536
Yamba	304
Yanco	65
Yanderra	54
Yarramalong	13
Yarrawarrah	162
Yarrowitch	16
Yass	185
Yates Avenue	244
Yenda	168
Yennora	139
Yeo Park Infants	64
Yerong Creek	36
Yetman	26
Yoogali	56
York	380
Young	537
Young North	269
Yowie Bay	382
Zig Zag	56

Central School Enrolments August 2007

Name	Prim	Sec	Total
Ardlethan Central	71	77	148
Ariah Park Central	76	44	120
Ashford Central	87	92	179
Balranald Central	97	148	245
Baradine Central	81	44	125
Barellan Central	67	60	127
Barraba Central	115	110	225
Batlow Technology	91	108	199
Bingara Central	144	69	213
Binnaway Central	76	18	94
Boggabilla Central	74	58	132
Bonalbo Central	58	84	142
Boorowa Central	92	121	213
Bowraville Central	179	133	312
Braidwood Central	171	214	385
Brewarrina Central	128	64	192
Bulahdelah Central	156	354	510
Bundarra Central	80	70	150
Coleambally Central	103	155	258
Collarenebri Central	74	40	114
Coolah Central	112	107	219
Coolamon Central	168	174	342
Dubbo School of Distance Education	105	217	322
Dunedoo Central	106	109	215
Emmaville Central	57	22	79
Goodooga Central	31	19	50
Gulargambone Central	64	28	92
Guyra Central	175	131	306
Hillston Central	117	140	257
Ivanhoe Central	31	9	40
Jindabyne Central	304	106	410

Name	Prim	Sec	Total
Lake Cargelligo Central	118	98	216
Lightning Ridge Central	241	172	413
Lockhart Central	84	59	143
Lord Howe Island Central	29	0	29
Manilla Central	225	135	360
Mendooran Central	86	50	136
Menindee Central	56	60	116
Merriwa Central	136	101	237
Molong Central	230	202	432
Mungindi Central	38	20	58
Nimbin Central	71	112	183
Oaklands Central	55	16	71
Peak Hill Central	95	101	196
Portland Central	88	106	194
Quandialla Central	38	35	73
The Rock Central	125	41	166
Tooleybuc Central	83	57	140
Tottenham Central	86	47	133
Trangie Central	77	115	192
Trundle Central	40	54	94
Tullamore Central	51	28	79
Tullibigeal Central	30	28	58
Ungarie Central	56	38	94
Uralla Central	197	159	356
Urana Central	22	22	44
Walcha Central	216	160	376
Warren Central	141	104	245
Wilcannia Central	58	34	92
Woodenbong Central	113	134	247
Yeoval Central	61	72	133

Community School Enrolments August 2007

Name	Prim	Sec	Total
Alexandria Park Community	145	174	319
Evans River Community	166	364	530
Hunter School of Performing Arts	115	964	1079
Lucas Heights Community	452	481	933
Southern Cross	352	701	1053
Wadalba Community	247	983	1230

Name	No.
Airds High	510
Albion Park High	891
Albury High	1029
Alstonville High	919
Ambarvale High	946
Armidale High	641
Arthur Phillip High	1424
Ashcroft High	621
Ashfield Boys High	604
Asquith Boys High	469
Asquith Girls High	819
Auburn Girls High	782
Ballina High	595
Bankstown College	324
Bankstown Girls High	642
Banora Point High	576
Barham High	244
Barrenjoey High	735
Bass High	756
Batemans Bay High	775
Baulkham Hills High	1142
Bega High	1076
Bellingen High	688
Belmont High	1063
Belmore Boys High	456
Beverly Hills Girls High	1146
Billabong High	388
Birrong Boys High	474
Birrong Girls High	856
Blacktown Boys High	325
Blacktown Girls High	695
Blakehurst High	1039
Blaxland High	1055
Blayney High	352
Bomaderry High	931
Bombala High	193
Bonnyrigg High	713
Bossley Park High	1466
Bourke High	168
Bowral High	911
Bradfield College	325
Brisbane Water Secondary College Umina	919
Brisbane Water Secondary College Woy Woy	732
Broken Hill High	721
Bulli High	872
Burwood Girls High	1073
Byron Bay High	707

Name	No.
Cabramatta High	1137
Callaghan College Jesmond	589
Callaghan College Wallsend	991
Callaghan College Waratah	753
Cambridge Park High	582
Camden Haven High	976
Camden High	1058
Campbelltown High	1029
Canley Vale High	987
Canobolas Rural Technology High	614
Canowindra High	256
Canterbury Boys High	468
Canterbury Girls High	620
Cardiff High	660
Caringbah High	901
Carlingford High	1089
Casino High	767
Castle Hill High	1086
Casula High	634
Cecil Hills High	1128
Cessnock High	626
Chatham High	857
Chatswood High	938
Cheltenham Girls High	1324
Cherrybrook TechnologyHigh	1812
Chester Hill High	1180
Chifley College Bidwill	606
Chifley College Dunheved	406
Chifley College Mount Druitt	673
Chifley College Senior	398
Chifley College Shalvey	470
Cleveland St Intensive English High	228
Cobar High	288
Coffs Harbour College	381
Coffs Harbour High	817
Colo High	1058
Colyton High	850
Concord High	794
Condell Park High	585
Condobolin High	216
Conservatorium High	192
Coomealla High	429
Coonabarabran High	397
Coonamble High	246
Cootamundra High	375

Name	No.
Corowa High	463
Corrimal High	514
Cowra High	839
Cranebrook High	812
Crestwood High	855
Cronulla High	699
Crookwell High	285
Cumberland High	673
Dapto High	932
Davidson High	745
Deniliquin High	646
Denison Sec College Bathurst	860
Denison Sec College Kelso	674
Doonside High	908
Dorrigo High	211
Dubbo College Delroy	479
Dubbo College Senior	779
Dubbo College South	645
Dulwich High	430
Dungog High	747
Duval High	820
Eagle Vale High	707
East Hills Boys High	666
East Hills Girls High	936
Eden Marine High	750
Elderslie High	958
Elizabeth Macarthur High	799
Endeavour Sports High	970
Engadine High	849
Epping Boys High	1047
Erina High	1020
Erskine Park High	981
Evans High	666
Fairfield High	1082
Fairvale High	1391
Farrer Agricultural High	611
Figtree High	1002
Finley High	499
Forbes High	526
Fort Street High	927
Francis Greenway High	659
Galston High	762
Georges River College Hurstville	366
Georges River College Oatley	862
Georges River College Peakhurst	637

Name	No.
Georges River College Penshurst	658
Gilgandra High	362
Girraween High	755
Glen Innes High	540
Glendale High	775
Glenmore Park High	693
Glenwood High	711
Gloucester High	379
Gorokan High	967
Gosford High	1067
Goulburn High	555
Grafton High	1024
Granville Boys High	485
Granville South High	469
Great Lakes College Forster	669
Great Lakes College Tuncurry Junior	550
Great Lakes College Tuncurry Senior	411
Greystanes High	983
Griffith High	689
Gulgong High	270
Gundagai High	238
Gunnedah High	600
Gymea High	636
Hawkesbury High	644
Hay War Memorial High	263
Heathcote High	997
Henry Kendall High	1325
Holroyd High	572
Holsworthy High	713
Homebush Boys High	1241
Hornsby Girls High	717
Hoxton Park High	871
Hunter River High	676
Hunter Sports High	875
Hunters Hill High	585
Hurlstone Agriculture High	965
Illawarra College	208
Illawarra Sports High	1089
Ingleburn High	923
Inverell High	636
Irrawang High	985
J J Cahill Memorial High	358
James Busby High	904
James Cook Boys High	568
James Fallon High	647

Name	No.
James Meehan High	444
James Ruse Agriculture High	839
Jamison High	951
Jannali High	869
John Edmondson High	549
Junee High	299
Kadina High	549
Kanahooka High	616
Kandos High	203
Karabar High	923
Katoomba High	601
Keira High	758
Kellyville High	1059
Kempsey High	495
Kiama High	1308
Killara High	1452
Killarney Heights High	739
Kincumber High	1050
Kingscliff High	1237
Kingsgrove High	1059
Kingsgrove North High	710
Kingswood High	775
Kirrawee High	1199
Kogarah High	713
Kooringal High	937
Kotara High	996
Ku-ring-gai High	903
Kurri Kurri High	792
Kyogle High	444
Lake Illawarra High	820
Lake Macquarie High	509
Lake Munmorah High	929
Lambton High	1107
Leeton High	498
Leumeah High	902
Lisarow High	1118
Lismore High	835
Lithgow High	1030
Liverpool Boys High	635
Liverpool Girls High	1001
Lurnea High	796
Macarthur Girls High	1018
Macintyre High	388
Macksville High	688
Maclean High	1017
Macquarie Boys High	204
Macquarie Fields High	1026
Maitland Grossmann High	1016
Maitland High	865
Marrickville High	348
Marsden High	671
Matraville Sports High	368
Melville High	874
Menai High	1053
Merewether High	1075
Merrylands High	737
Miller High	777
Mitchell High	1039
Model Farms High	979
Monaro High	668
Moorebank High	877
Moorefield Girls High	593
Moree Secondary College Albert St	168
Moree Secondary College Carol Ave	218
Morisset High	886
Moruya High	696
Mosman High	755
Moss Vale High	681
Mount Annan High	769
Mount Austin High	558
Mount View High	1063
Mudgee High	970
Muirfield High	567
Mullumbimby High	892
Mulwaree High	702
Murray High	826
Murrumburrah High	181
Murwillumbah High	621
Muswellbrook High	720
Nambucca Heads High	465
Narara Valley High	923
Narooma High	615
Narrabeen Sports High	424
Narrabri High	646
Narrandera High	291
Narromine High	299
Nepean High	547
Newcastle High	957
Newtown High Performing Arts	866
Normanhurst Boys High	712
North Sydney Boys High	920
North Sydney Girls High	922
Northern Beaches Seconday College Balgowlah Boys	524
Northern Beaches Secondary College Cromer	698
Northern Beaches Secondary College Freshwater	540
Northern Beaches Secondary College Mackellar Girls	961
Northern Beaches Secondary College Manly	766
Northlakes High	1016
Northmead High	711
Nowra High	1044
Nyngan High	171
Oak Flats High	776
Oberon High	212
Orange High	1091
Orara High	646
Oxley High	1113
Parkes High	755
Parramatta High	681
Peel High	401
Pendle Hill High	318
Pennant Hills High	1286
Penrith High	903
Picnic Point High	959
Picton High	1117
Pittwater High	937
Plumpton High	1073
Port Hacking High	1019
Port Macquarie High	943
Prairiewood High	892
Punchbowl Boys High	353
Quakers Hill High	953
Queanbeyan High	481
Quirindi High	361
Randwick Boys High	669
Randwick Girls High	873
Richmond High	776
Richmond River High	619
Riverside Girls High	1008
Riverstone High	381
Robert Townson High	926
Rooty Hill High	1028
Rose Bay Secondary College	864
Rutherford High	858
Ryde Secondary College	871
Sarah Redfern High	466
Scone High	479
Sefton High	1046
Seven Hills High	517
Shoalhaven High	911
Singleton High	1249
Sir Joseph Banks High	561
Smiths Hill High	743
South Grafton High	993
South Sydney High	887
Springwood High	792
St Clair High	1059
St George Girls High	933
St Ives High	834
St Johns Park High	1188
St Marys High	851
Strathfield Girls High	1078
Strathfield South High	607
Swansea High	699
Sydney Boys High	1133
Sydney Distance Education High	492
Sydney Girls High	921
Sydney Secondary College Balmain	573
Sydney Secondary College Blackwattle Bay	551
Sydney Secondary College Leichhardt	696
Sydney Technical High	917
Sylvania High	744
Tamworth High	796
Taree High	962
Temora High	448
Tempe High	657
Tenterfield High	321
Terrigal High	1273
The Forest High	628
The Henry Lawson High	231
The Hills Sports High	912
Thomas Reddall High	597
Tomaree High	1210
Toormina High	1038
Toronto High	921
Tuggerah Lakes Secondary College Berkeley Vale	976
Tuggerah Lakes Secondary College The Entrance	673
Tuggerah Lakes Secondary College Tumbi Umbi	821
Tumbarumba High	183

Name	No.
Tumut High	525
Turramurra High	943
Tweed River High	780
Ulladulla High	1234
Vincentia High	1021
Wade High	682
Wagga Wagga High	989
Walgett Community College High	160
Warialda High	312
Warilla High	1099
Warners Bay High	1274
Warrawong High	452
Wauchope High	739
Wee Waa High	165
Wellington High	311
West Wallsend High	588
West Wyalong High	314
Westfields Sports High	1557
Westport High	756
Whitebridge High	1013
Wiley Park Girls High	619
Willoughby Girls High	841
Willyama High	606
Windsor High	508
Wingham High	745
Winmalee High	958
Wollongong High Performing Arts	949
Wollumbin High	481
Woolgoolga High	1079
Woolooware High	1083
Woonona High	756
Wyndham College	641
Wyong High	733
Yanco Agricultural High	300
Yass High	428
Young High	542

Schools for Specific Purposes Enrolments August 2007

Name	No.
Ajuga	24
Anson Street	80
Arndell	9
Arranounbai	21
Barwon LC	8
Bates Drive	61
Beverley Park	55
Bridge Road	28
Broderick Gillawarna	88
Budawang	12
Bullimbal	33
Cairnsfoot	83
Caldera	20
Cameron Park	30
Campbell House	44
Canterbury Vale	19
Carenne	73
Carinya	45
Caroline Chisholm	70
Casuarina	26
Centennial Park	11
Chalmers Road	56
Clarke Road	64
Coffs Harbour LC	16
Cook	11
Coreen	39
Cromehurst	54
Dorchester	47
Edgeware	22
Fisher Road	58
Fowler Road	37
G S Kidd Memorial	20
Gadara	12
George Anderson Walpole	28
Girrakool	97
Glendon	46
Glenfield Park	45
Glenvale	109
Gralee	19
Green Square	25
Halinda	100
Havenlee	44
Highlands	19
Holman Place	14
Holroyd	181
HopeTown	56
Hunter River	49
Induna	28
John Richardson	20
Kalinda	38
Kandeer	7
Karningul	12
Karonga	58
Kotara	12
Kurrambee	104
Lakeside	47
Lawrence Hargrave	53
Les Powell	55
Lincoln	25
Lomandra	27
Lucas Gardens	33
Mainsbridge	116
Mary Brooksbank	49
Mian	24
Minerva	52
Naremburn	23
Newcastle	25
Niland	49
North Gosford LC	20
Palm Avenue	12
Para Meadows	111
Parry	16
Passfield Park	50
Penrith Valley	11
Peterborough	74
Plumpton House	35
Putland	51
Redbank	33
Rivendell	48
Rowland Hassall	52
Shepherds Park	24
Sir Eric Woodward	44
St George	46
Stuart	6
Sunning Hill	19
Tallowood	84
Tangara	25
The Beach	16
The Bidgee	14
The Crescent	42
The Hills	96
The Hunter Orthopaedic	37
Verona	17
Wairoa	56
Wakefield	25
Wangee Park	26
Wewak Street	54
Willans Hill	54
William Rose	52
Wilson Park	39
Woniora Road	11
Woodberry LC	13

Statistics of Government Schools

Further information is available in the publications IN BRIEF and STATISTICAL BULLETIN.

NSW Government Schools 2008

Primary Schools	1625
Separate Infants Schools	17
Central /Community Schools	67
High Schools	397
Schools for Specific Purposes	114
Environmental Education Centres	23
Total	2243

There are also 100 Preschools attached to Primary and Infants Schools including one separate Preschool.

Enrolments in NSW Government Schools 1988 – 2007

Year	Primary	Secondary	SSP	Total
1988	434,811	318,484	4,626	757,921
1989	434,098	310,765	4,400	749,263
1990	434,814	304,006	4,366	743,186
1991	438,218	304,087	4,112	746,417
1992	444,059	308,752	4,041	756,852
1993	445,238	308,909	3,901	758,048
1994	445,599	306,717	3,798	756,114
1995	446,722	305,396	3,789	755,907
1996	450,465	306,823	3,749	761,037
1997	451,560	308,923	3,690	764,173
1998	452,565	309,137	3,673	765,375
1999	453,454	308,116	3,762	765,332
2000	454,363	303,681	3,792	761,836
2001	451,096	301,771	3,873	756,740
2002	447,897	302,988	3,915	754,800
2003	443,213	304,034	3,938	751,185
2004	438,677	302,850	3,981	745,508
2005	434,876	302,578	4,124	741,578
2006	432,660	303,622	4,133	740,415
2007	429,900	304,458	4,278	738,636

Notes: Since 1993 some students have enrolled part-time. All enrolments are reported in full-time equivalent units (FTEs) and include full-time and part-time students.

School Openings and Closures 2007 – 2008

School Openings 2007-2008

School Name (Code)	Location	Region	SEG	Date
Ashtonfield Public School (4642)	Ashtonfield	Hunter/Central Coast	Maitland	28-Jan-07
Barwon Learning Centre (5762)	Moree	New England	Moree	09-Mar-07
Coffs Harbour Learning Centre (5763)	Boambee	North Coast	Clarence/Coffs Harbour	29-Jan-07
John Palmer Public School (4648)	The Ponds	Western Sydney	Blacktown	29-Jan-08
North Gosford Learning Centre (5760)	North Gosford	Hunter/Central Coast	Central Coast	28-Jan-07
Penrith Valley Learning Centre (5761)	Werrington	Western Sydney	Penrith	01-May-07
Ropes Crossing Public School (4645)	Ropes Crossing	Western Sydney	Mount Druitt	29-Jan-08
Tullimbar Public School (4649)	Tullimbar	Illawarra and South East	Shellharbour	29-Jan-08
Woodberry Learning Centre (5764)	Woodberry	Hunter/Central Coast	Maitland	26-Apr-07

School Reopened 2007-2008

School Name (Code)	Location	Region	SEG	Date
Marra Creek Public School (4454)	Nyngan	Western NSW	Bourke	5 Feb 07

School Closures 2007-2008

School Name (Code)	Location	Region	SEG	Date
Burraboi Public School (3880)	Burraboi via Deniliquin	Riverina	Deniliquin	5-Feb-07
Drinane Public School (1772)	Dubbo	Western NSW	Dubbo	21-Dec-07
Galong Public School (1951)	Galong	Riverina	Wagga Wagga	21-Dec-07
Limbri Public School (2180)	Limbri	New England	Tamworth	21-Dec-07

Change of School Names and Status

Former Name	New Name (Code)	Location	Region	SEG	Effective Date
Stuart School	Five Islands School (5723)	Booragul	Hunter/Central Coast	H/CC 5	Mar-08

2008

Term 1	Tues 29 Jan 2008	to	Fri 11 April 2008	Eastern Division	52 days
	Tues 5 Feb 2008	to	Fri 11 April 2008	Western Division	47 days
Autumn Vacation	**Mon 14 April 2008**	**to**	**Fri 25 April 2008**		
Term 2	Mon 28 April 2008	to	Fri 4 July 2008		49 days
Winter Vacation	**Mon 7 July 2008**	**to**	**Fri 18 July 2008**		
Term 3	Mon 21 July 2008	to	Fr 26 Sept 2008		50 days
Spring Vacation	**Mon 29 Sept 2008**	**to**	**Fri 10 Oct 2008**		
Term 4	Mon 13 Oct 2008	to	Fri 19 Dec 2008		50 days
Summer Vacation 2008 - 2009	**Mon 22 Dec 2008**	**to**	**Mon 26 Jan 2009**	Eastern Division	
	Mon 22 Dec 2008	**to**	**Mon 2 Feb 2009**	Western Division	

Number of school days : 201 Eastern Division 196 Western Division

2009

Term 1	Tue 27 Jan 2009	to	Thurs 9 April 2009	Eastern Division	53 days
	Tue 3 Feb 2009	to	Thurs 9 April 2009	Western Division	48 days
Autumn Vacation	**Fri 10 April 2009**	**to**	**Fri 24 April 2009**		
Term 2	Tue 28 April 2009	to	Fri 10 July 2009		53 days
Winter Vacation	**Mon 13 July 2009**	**to**	**Fri 24 July 2009**		
Term 3	Mon 27 July 2009	to	Fri 2 Oct 2009		50 days
Spring Vacation	**Mon 5 Oct 2009**	**to**	**Fri 16 Oct 2009**		
Term 4	Mon 19 Oct 2009	to	Fri 18 Dec 2009		45 days
Summer Vacation 2009 - 2010	**Mon 21 Dec 2009**	**to**	**Tue 26 Jan 2010**	Eastern Division	
	Mon 21 Dec 2009	**to**	**Tue 2 Feb 2010**	Western Division	

Number of school days : 201 Eastern Division 196 Western Division

2010

Term 1	Wed 27 Jan 2010	to	Thurs 1 April 2010	Eastern Division	47 days
	Wed 3 Feb 2010	to	Thurs 1 April 2010	Western Division	42 days
Autumn Vacation	**Fri 2 April 2010**	**to**	**Fri 16 April 2010**		
Term 2	Mon 19 April 2010	to	Fri 2 July 2010		53 days
Winter Vacation	**Mon 5 July 2010**	**to**	**Fri 16 July 2010**		
Term 3	Mon 19 July 2010	to	Fri 24 Sept 2010		50 days
Spring Vacation	**Mon 27 Sept 2010**	**to**	**Fri 8 Oct 2010**		
Term 4	Mon 11 Oct 2010	to	Fri 17 Dec 2010		50 days
Summer Vacation 2010 - 2011	**Mon 20 Dec 2010**	**to**	**Wed 26 Jan 2011**	Eastern Division	
	Mon 20 Dec 2010	**to**	**Wed 2 Feb 2011**	Western Division	

Number of school days : 200 Eastern Division 195 Western Division

DATE	DAY	EVENT
January 2008		
28 January	Monday	Mid-summer student vacation ends
29 January - 10 February	Tuesday - Sunday	Enrolments and consultation with teaching section
February		
11 February	Monday	Semester One (Term 1) begins
April		
13 April	Sunday	Semester One (Term 1) ends
14 April	Monday	Autumn student vacation begins
27 April	Sunday	Autumn student vacation ends
28 April	Monday	Semester One (Term 2) begins
June		
29 June	Sunday	Semester One (Term 2) ends
30 June - 6 July	Monday - Sunday	Enrolments and consultation with teaching section
July		
7 July	Monday	Winter student vacation begins
20 July	Sunday	Winter student vacation ends
21 July	Monday	Semester Two (Term 3) begins
September		
28 September	Sunday	Semester Two (Term 3) ends
29 September	Monday	Spring student vacation begins
October		
12 October	Sunday	Spring student vacation ends
13 October	Monday	Semester Two (Term 4) begins
December		
7 December	Sunday	Semester Two (Term 4) ends
8 December - 21 December	Monday - Sunday	Student administration and consultation with teaching section
22 December	Monday	Mid-summer student vacation begins
January 2009		
26 January	Monday	Mid-summer student vacation ends
27 January - 8 February	Tuesday - Sunday	Enrolments and consultation with teaching section
February		
9 February	Monday	Semester One (Term 1) begins
April		
9 April	Thursday	Semester One (Term 1) ends
10 April	Friday	Autumn student vacation begins
26 April	Sunday	Autumn student vacation ends
27 April	Monday	Semester One (Term 2) begins
June		
28 June	Sunday	Semester One (Term 2) ends
29 June - 5 July	Monday - Sunday	Enrolments and consultation with teaching section
July		
6 July	Monday	Winter student vacation begins
19 July	Sunday	Winter student vacation ends
20 July	Monday	Semester Two (Term 3) begins
October		
4 October	Sunday	Semester Two (Term 3) ends
5 October	Monday	Spring student vacation begins
18 October	Sunday	Spring student vacation ends
19 October	Monday	Semester Two (Term 4) begins
December		
6 December	Sunday	Semester Two (Term 4) ends
7 December - 20 December	Monday - Sunday	Student administration and consultation with teaching section
21 December	Monday	Mid-summer student vacation begins
January 2010		
24 January	Sunday	Mid-summer student vacation ends

Types and Classifications of Schools

Government schools are designated Public, Infants, Central, Community, High, Schools for Specific Purposes and Environmental Education Centres. A school's classification is generally based on the number of students enrolled in the first term of the year of classification. When classification changes are approved, the reclassification usually operates from the beginning of the following school year.

Infants and Public Schools

Infants and public schools provide instruction in accordance with the primary curriculum. Where necessary, public schools may also provide part of the secondary curriculum. Infants schools enrol students from Kindergarten to Year 2 and public schools enrol students from Kindergarten to Year 6. Infants and public schools are classified as follows:

Class 6	An enrolment of 25 or less
Class 5	An enrolment from 26 to 159
Class 4	An enrolment from 160 to 300
Class 3	An enrolment from 301 to 450
Class 2	An enrolment from 451 to 700
Class 1	An enrolment of more than 700

Central Schools

Central schools have primary and secondary departments and may be established where there is an enrolment in secondary classes of 20 or more students, including at least 8 students above Year 7. Central schools enrol students from Kindergarten to Year 10 or from Kindergarten to Year 12.

Central schools are classified as follows:

Class 4	An enrolment from 26 to 159
Class 3	An enrolment from 160 to 300
Class 2	An enrolment from 301 to 450
Class 1	An enrolment of more than 450

Community Schools

There are five community schools catering for Kindergarten to Year 12: Lucas Heights Community School, Hunter School of Performing Arts, Southern Cross School, Wadalba Community School and Evans River Community School. They have been classified as Class 8 or 9, and the principals of these schools are classified as secondary principals.

High Schools

High Schools enrol secondary students only and provide instruction in accordance with curricula leading to the School Certificate and the Higher School Certificate. High Schools enrol students from Year 7 to Year 12 and are classified as follows:

Class 9	An enrolment of 900 or less
Class 8	An enrolment of more than 900

Schools for Specific Purposes

Schools for Specific Purposes cater for students with specific needs. They are classified as follows: the number of permanent full time teaching staff at a school is multiplied by 30; the resulting number is then used to classify the school using the same scale as for public schools.

Environmental Education Centres

Environmental Education Centres do not have permanent enrolments. They are classified as follows:

Class 1	Those centres with less than 2 full-time equivalent teachers
Class 2	Those centres with 2 or more full-time equivalent teachers

The alphabetical list of schools provides details for each government school. Following are notes on the contents of the alphabetical list and the codes used.

The first line of each entry includes the full school name, and the schools administrative code, shown in parentheses. The Foreword on page 2 details the listing procedures used in regard to schools beginning with The, and those with North, East, South and West in their names.

The second line of the entry contains the address of the school. The postal address is indicated in parentheses if the school has a post office box. The postal address town/suburb is as for the street address unless indicated otherwise. The third line of the entry contains the school's phone numbers and fax number.

The fourth line of the entry includes the School Education Group (SEG) the school is in, the classification of the school, transfer points, and allowances.

Transfer points are points allocated to teachers for each year of service at the school. TP1 indicates one transfer point for each year of service. Transfer points range from 1 to 8.

A is the abbreviation for the allowance connected with the school:

- The allowance for socio-economic isolation is shown as a number from 1 to 10, with 1 representing the greatest isolation.
- H or C indicates an allowance for hot or cold climate.
- L indicates those schools in the Western Division, which start one week later in Term 1.
- Y indicates schools in the City of Broken Hill.

Classification

Classification is shown as a number from 1 to 6 for public and infants schools; 1 to 4 for central schools; 8 to 9 for high schools and community schools; and 1 to 6 for schools for specific purposes. See the previous page for further details of the classification of schools.

The type of school is shown by a letter: P for primary schools, I for infants schools, C for central and community schools, S for secondary or high schools, SSP for Schools for Specific Purposes, and EEC for Environmental Education Centres. In cases such as Norfolk Island Central School, where the school is run by the Department of Education and Training but paid for by another authority, an asterisk rather than a letter is used, eg, 2*.

Abbreviations in the alphabetical list of schools

A	Allowances
C	Central or community school (Class)
C	Cold area living allowance (Allowances)
EEC	Environmental Education Centre
H	Hot area living allowance
I	Infants school
L	Later start in Term 1
P	Primary school
S	Secondary or high school
SSP	School for Specific Purposes
TP	Transfer points
Y	Yancowina allowance (Broken Hill)

NB. Schools in the Broken Hill area operate on Australian Central time.

The last line of the entry is the school's email address.

Abbotsford Public School (1001)
350 Great North Rd Abbotsford 2046
Ph 02 9713 6220, 02 9713 6419 Fax 02 9712 1825
Port Jackson SEG P3 TP1
abbotsford-p.school@det.nsw.edu.au

Aberdeen Public School (1002)
Segenhoe St Aberdeen 2336
(PO Box 6 Aberdeen 2336)
Ph 02 6543 7271 Fax 02 6543 7712
Hunter/Central Coast 8 SEG P4 TP1
aberdeen-p.school@det.nsw.edu.au

Abermain Public School (1003)
Goulburn St Abermain 2326
Ph 02 4930 4210 Fax 02 4930 4319
Hunter/Central Coast 9 SEG P4 TP1
abermain-p.school@det.nsw.edu.au

Adaminaby Public School (1007)
Cosgrove St Adaminaby 2630
Ph 02 6454 2265 Fax 02 6454 2552
Sapphire Coast/Monaro SEG P5 TP2 A 10C
adaminaby-p.school@det.nsw.edu.au

Adamstown Public School (1008)
Bryant St Adamstown 2289
Ph 02 4957 1114, 02 4952 5408 Fax 02 4956 2446
Hunter/Central Coast 5 SEG P4 TP1
adamstown-p.school@det.nsw.edu.au

Adelong Public School (1009)
Gilmore St Adelong 2729
Ph 02 6946 2053 Fax 02 6946 2199
Riverina East SEG P5 TP2 A 10
adelong-p.school@det.nsw.edu.au

Afterlee Public School (3640)
Afterlee Rd Kyogle 2474
Ph 02 6633 3163 Fax 02 6633 3247
Richmond Valley SEG P6 TP2 A 8
afterlee-p.school@det.nsw.edu.au

Airds High School (8493)
Briar Rd Campbelltown South 2560
Ph 02 4625 5811, 02 4625 5633 Fax 02 4626 4374
Campbelltown SEG S9 TP4
airds-h.school@det.nsw.edu.au

Ajuga School (5748)
Roy Watts Rd Glenfield 2167
Ph 02 9829 1050 Fax 02 9829 1768
Liverpool SEG SSP4 TP2
ajuga-s.school@det.nsw.edu.au

Albert Park Public School (4177)
344 Keen Street East Lismore 2480
(PO Box 450 Lismore 2480)
Ph 02 6621 3259 Fax 02 6622 0560
The Wilson SEG P5 TP1
albertpk-p.school@det.nsw.edu.au

Albion Park High School (8586)
Church St Albion Park 2527
Ph 02 4257 1744 Fax 02 4257 1826
Shellharbour SEG S8 TP1
albionpk-h.school@det.nsw.edu.au

Albion Park Public School (1015)
Tongarra & Hamilton Rds Albion Park 2527
Ph 02 4256 1244 Fax 02 4256 4160
Shellharbour SEG P2 TP1
albionpk-p.school@det.nsw.edu.au

Albion Park Rail Public School (4121)
Tongarra Rd Albion Park 2527
(PO Box 1 Albion Park 2527)
Ph 02 4256 1287 Fax 02 4257 1912
Shellharbour SEG P2 TP1
albionpkr-p.school@det.nsw.edu.au

Albury High School (8101)
Kiewa St Albury 2640
Ph 02 6021 3488 Fax 02 6041 3782
Riverina South SEG S8 TP1
albury-h.school@det.nsw.edu.au

Albury North Public School (3922)
868 Mate St Albury 2640
Ph 02 6025 1730, 02 6025 2465 Fax 02 6040 2326
Riverina South SEG P4 TP1
alburynth-p.school@det.nsw.edu.au

Albury Public School (1017)
481 David St Albury 2640
(PO Box 547 Albury 2640)
Ph 02 6021 3849, 02 6021 3707 Fax 02 6041 1265
Riverina South SEG P2 TP1
albury-p.school@det.nsw.edu.au

Albury West Public School (1019)
Mott St Albury 2640
(PO Box 3245 Albury 2640)
Ph 02 6021 2288, 02 6021 2317 Fax 02 6041 3783
Riverina South SEG P4 TP1
alburywest-p.school@det.nsw.edu.au

Aldavilla Public School (4601)
Sherwood Rd Aldavilla 2440
(PO Box 10 West Kempsey 2440)
Ph 02 6563 1141 Fax 02 6562 7506
Hastings SEG P4 TP1
aldavilla-p.school@det.nsw.edu.au

Alexandria Park Community School (8556)
Park Rd Alexandria 2015
Ph 02 9698 1967, 02 9319 7498 Fax 02 9319 5007
Inner City SEG C9 TP1
alexparkcs-c.school@det.nsw.edu.au

Alfords Point Public School (4605)
Brushwood Drive Alfords Point 2234
Ph 02 9543 0185 Fax 02 9543 2817
Woronora River SEG P4 TP1
alfordspt-p.school@det.nsw.edu.au

Allambie Heights Public School (4200)
Allambie Rd Allambie Heights 2100
Ph 02 9451 5440, 02 9451 1871 Fax 02 9975 5046
Middle Harbour Network SEG P3 TP1
allambieht-p.school@det.nsw.edu.au

Alma Public School (1028)
Comstock St Broken Hill 2880
Ph 08 8088 2181 Fax 08 8087 3691
Broken Hill SEG P3 TP6 A HLY
alma-p.school@det.nsw.edu.au

Alstonville High School (8578)
Cawley Close Alstonville 2477
Ph 02 6628 5222, 02 6628 5231 Fax 02 6628 1223
Southern Cross SEG S8 TP1
alstonvill-h.school@det.nsw.edu.au

Alstonville Public School (1030)
Main St Alstonville 2477
Ph 02 6628 0775 Fax 02 6628 5362
Southern Cross SEG P2 TP1
alstonvill-p.school@det.nsw.edu.au

Ambarvale High School (8570)
Thomas Rose Drive Rosemeadow 2560
Ph 02 4627 1800, 02 4627 1322 Fax 02 4628 5289
Campbelltown SEG S8 TP2
ambarvale-h.school@det.nsw.edu.au

Ambarvale Public School (4505)
Copperfield Drive Ambarvale 2560
Ph 02 4626 1485, 02 4626 1498 Fax 02 4628 0430
Campbelltown SEG P3 TP2
ambarvale-p.school@det.nsw.edu.au

Ando Public School (1035)
Monaro Hwy Ando 2631
Ph 02 6458 6634 Fax 02 6458 6664
Sapphire Coast/Monaro SEG P6 TP4 A 8C
ando-p.school@det.nsw.edu.au

Anna Bay Public School (1040)
191 Gan Gan Rd Anna Bay 2316
Ph 02 4982 1187 Fax 02 4982 1879
Hunter/Central Coast 10 SEG P3 TP1
annabay-p.school@det.nsw.edu.au

Annandale North Public School (1042)
206 Johnston St Annandale 2038
Ph 02 9660 3972, 02 9660 3825 Fax 02 9692 8323
Network 8 SEG P3 TP1
annandalen-p.school@det.nsw.edu.au

Annandale Public School (1041)
25 Johnston St Annandale 2038
Ph 02 9516 3711, 02 9516 3942 Fax 02 9550 4581
Port Jackson SEG P4 TP1
annandale-p.school@det.nsw.edu.au

Annangrove Public School (3719)
Annangrove Rd Annangrove 2156
Ph 02 9679 1303 Fax 02 9679 1389
Hornsby Network SEG P5 TP1
annangrove-p.school@det.nsw.edu.au

Anson Street School (5625)
94 Anson St Orange 2800
(PO Box 1171 Orange 2800)
Ph 02 6362 4563 Fax 02 6361 7337
Orange SEG SSP3 TP1
ansonst-s.school@det.nsw.edu.au

Appin Public School (1045)
Main Rd Appin 2560
Ph 02 4631 1220 Fax 02 4631 1486
Campbelltown SEG P4 TP1
appin-p.school@det.nsw.edu.au

Arcadia Public School (1048)
Arcadia Rd Arcadia 2159
Ph 02 9653 1207 Fax 02 9653 2697
Hornsby Network SEG P5 TP1
arcadia-p.school@det.nsw.edu.au

Arcadia Vale Public School (4132)
Glade St Arcadia Vale 2283
Ph 02 4975 1181 Fax 02 4975 4237
Hunter/Central Coast 6 SEG P5 TP1
arcadiaval-p.school@det.nsw.edu.au

Ardlethan Central School (1051)
Mithul St Ardlethan 2665
Ph 02 6978 2046 Fax 02 6978 2202
Riverina North West SEG C4 TP4 A 8
ardlethan-c.school@det.nsw.edu.au

Argenton Public School (3904)
Montgomery St Argenton 2284
Ph 02 4958 1805 Fax 02 4958 2032
Hunter/Central Coast 6 SEG P5 TP1
argenton-p.school@det.nsw.edu.au

Ariah Park Central School (1055)
Reid St Ariah Park 2665
Ph 02 6974 1105 Fax 02 6974 1017
Riverina Central SEG C4 TP4 A 9
ariahpark-c.school@det.nsw.edu.au

Armidale City Public School (1057)
Faulkner St Armidale 2350
Ph 02 6772 3420, 02 6772 4312 Fax 02 6771 2262
New England Central SEG P3 TP1 A C
armidalec-p.school@det.nsw.edu.au

Armidale High School (8102)
Butler St Armidale 2350
(PO Box 730 Armidale 2350)
Ph 02 6772 7466 Fax 02 6772 2290
New England Central SEG S9 TP1 A C
armidale-h.school@det.nsw.edu.au

Arncliffe Public School (7401)
Princes Hwy Arncliffe 2205
Ph 02 9567 5060, 02 9567 6946 Fax 02 9556 1002
Inner West SEG P3 TP1
arncliffe-p.school@det.nsw.edu.au

Arncliffe West Infants School (5103)
Loftus St Arncliffe 2205
Ph 02 9567 7062, 02 9567 3753 Fax 02 9567 2869
Inner West SEG P5 TP1
arncliffew-p.school@det.nsw.edu.au

Arndell School (5538)
Badajoz Rd North Ryde 2113
Ph 02 9888 3737 Fax 02 9887 2941
Lane Cove Network SEG SSP5 TP1
arndell-s.school@det.nsw.edu.au

Arranounbai School (5656)
5 Aquatic Drive Frenchs Forest 2086
Ph 02 9452 3168 Fax 02 9975 5041
Middle Harbour Network SEG SSP4 TP1
allambie-s.school@det.nsw.edu.au

Artarmon Public School (1061)
McMillan Rd Artarmon 2064
Ph 02 9411 1950, 02 9411 1062 Fax 02 9415 1243
Middle Harbour Network SEG P2 TP1
artarmon-p.school@det.nsw.edu.au

Arthur Phillip High School (8892)
Smith St Parramatta 2150
Ph 02 9635 8638, 02 9635 8936 Fax 02 9687 1149
Cumberland SEG S9 TP1
arthurphil-h.school@det.nsw.edu.au

Ashbury Public School (1064)
Trevenar St Ashbury 2193
Ph 02 9798 4509, 02 9798 9135 Fax 02 9716 8089
Inner West SEG P3 TP1
ashbury-p.school@det.nsw.edu.au

Ashcroft High School (8397)
Maxwells Ave Ashcroft 2168
Ph 02 9607 8011, 02 9607 8422 Fax 02 9607 6562
Liverpool SEG S9 TP4
ashcroft-h.school@det.nsw.edu.au

Ashcroft Public School (4344)
Sheriff St Ashcroft 2168
Ph 02 9607 8202, 02 9607 0453 Fax 02 9608 4695
Liverpool SEG P4 TP4
ashcroft-p.school@det.nsw.edu.au

Ashfield Boys High School (8832)
117 Liverpool Rd Ashfield 2131
(PO Box 108 Ashfield 1800)
Ph 02 9798 6620, 02 9798 5520 Fax 02 9716 8004
Inner West SEG S9 TP1
ashfieldbo-h.school@det.nsw.edu.au

Ashfield Public School (1065)
Liverpool Rd Ashfield 2131
(PO Box 70 Ashfield 1800)
Ph 02 9798 4400 Fax 02 9716 7250
Inner West SEG P4 TP1
ashfield-p.school@det.nsw.edu.au

Ashford Central School (1066)
Albury St Ashford 2361
Ph 02 6725 4101 Fax 02 6725 4336
New England North SEG C3 TP4 A 7HL
ashford-c.school@det.nsw.edu.au

Ashmont Public School (4375)
Bardia St Wagga Wagga 2650
Ph 02 6931 4944 Fax 02 6931 4320
Riverina North SEG P3 TP1
ashmont-p.school@det.nsw.edu.au

Ashtonfield Public School (4642)
Norfolk St Ashtonfield 2323
(PO Box 2540 Greenhills, 2323)
Ph 02 4934 3584 Fax 02 4934 3510
Hunter/Central Coast 10 SEG P3 TP1
ashtonfiel-p.school@det.nsw.edu.au

Asquith Boys High School (8245)
Jersey St Asquith 2077
Ph 02 9477 3508, 02 9477 3779 Fax 02 9482 2546
Hornsby Network SEG S9 TP1
asquithboy-h.school@det.nsw.edu.au

Asquith Girls High School (8222)
Stokes Ave Asquith 2077
Ph 02 9477 6411 Fax 02 9482 2524
Hornsby Network SEG S8 TP1
asquithgir-h.school@det.nsw.edu.au

Asquith Public School (1070)
Dudley St Asquith 2077
Ph 02 9477 1258, 02 9477 3660 Fax 02 9482 2523
Hornsby Network SEG P4 TP1
asquith-p.school@det.nsw.edu.au

Athelstane Public School (3453)
Athelstane Ave Arncliffe 2205
Ph 02 9567 3550, 02 9567 2285 Fax 02 9556 1742
Inner West SEG P3 TP1
athelstane-p.school@det.nsw.edu.au

Attunga Public School (1071)
Railway St Attunga 2345
Ph 02 6769 5554 Fax 02 6769 5690
New England Central SEG P5 TP1 A 8
attunga-p.school@det.nsw.edu.au

Auburn Girls High School (8253)
Hunter St & Braemar Ave Auburn 2144
Ph 02 9649 6949, 02 9649 7742 Fax 02 9749 1035
Granville SEG S9 TP1
auburng-h.school@det.nsw.edu.au

Auburn North Public School (1073)
100 Adderley St Auburn 2144
Ph 02 9748 1036, 02 9748 2478 Fax 02 9748 0109
Granville SEG P2 TP1
auburnnth-p.school@det.nsw.edu.au

Auburn Public School (7403)
Auburn Rd & Beatrice St Auburn 2144
Ph 02 9646 2200, 02 9649 8935 Fax 02 9749 1654
Granville SEG P1 TP1
auburn-p.school@det.nsw.edu.au

Auburn West Public School (1075)
Chiswick Rd Auburn 2144
Ph 02 9649 6774, 02 9649 6741 Fax 02 9749 1467
Granville SEG P2 TP1
auburnwest-p.school@det.nsw.edu.au

Austinmer Public School (1076)
90 Lawrence Hargrave Drive Austinmer 2515
Ph 02 4267 1311 Fax 02 4267 1018
Wollongong North SEG P4 TP1
austinmer-p.school@det.nsw.edu.au

Austral Public School (1077)
Edmondson Ave Austral 2179
Ph 02 9606 0312, 02 9606 9007 Fax 02 9606 0080
Hoxton SEG P3 TP1
austral-p.school@det.nsw.edu.au

Australia Street Infants School (5104)
Australia St Newtown 2042
Ph 02 9557 5377, 02 9519 7769 Fax 02 9550 1461
Network 8 SEG P5 TP1
australist-p.school@det.nsw.edu.au

Avalon Public School (3792)
Old Barrenjoey Rd Avalon Beach 2107
Ph 02 9973 1439 Fax 02 9973 1423
Peninsula Network SEG P1 TP1
avalon-p.school@det.nsw.edu.au

Avoca Beach Public School (1082)
The Round Drive Avoca Beach 2260
Ph 02 4382 1416 Fax 02 4381 1431
Hunter/Central Coast 3 SEG P3 TP1
avocabch-p.school@det.nsw.edu.au

Avoca Public School (1081)
Sheepwash Rd Avoca via Moss Vale 2577
Ph 02 4887 7224 Fax 02 4887 7380
Goulburn/Highlands SEG P5 TP1
avoca-p.school@det.nsw.edu.au

Awaba Public School (1084)
Mulbring St Awaba 2283
Ph 02 4959 2502 Fax 02 4950 4905
Hunter/Central Coast 6 SEG P5 TP1
awaba-p.school@det.nsw.edu.au

Awabakal Environmental Education Centre (5682)
Boundary St Dudley 2290
(PO Box 2208 Gateshead M.C. 2209)
Ph 02 4944 7203 Fax 02 4942 6097
Hunter/Central Coast 5 SEG EEC2 TP1
awabakal-e.school@det.nsw.edu.au

Badgerys Creek Public School (1091)
Badgerys Creek Rd Badgerys Creek 2171
Ph 02 4774 8266 Fax 02 4774 9314
Hoxton SEG P5 TP2
badgerysck-p.school@det.nsw.edu.au

Balarang Public School (4291)
Government Rd Oak Flats 2529
Ph 02 4256 1846 Fax 02 4257 1441
Shellharbour SEG P3 TP1
balarang-p.school@det.nsw.edu.au

Bald Blair Public School (1098)
Ebor Rd Guyra 2365
Ph 02 6779 1578 Fax 02 6779 2060
New England North SEG P5 TP4 A 9C
baldblair-p.school@det.nsw.edu.au

Bald Face Public School (3794)
Stuart St Blakehurst 2221
Ph 02 9546 1565 Fax 02 9546 7782
Georges River SEG P4 TP1
baldface-p.school@det.nsw.edu.au

Balgowlah Heights Public School (3736)
Lewis St Balgowlah 2093
Ph 02 9948 2225, 02 9948 4435 Fax 02 9949 7241
Peninsula Network SEG P2 TP1
balgowlaht-p.school@det.nsw.edu.au

Balgowlah North Public School (3984)
10 Manning St Balgowlah North 2093
Ph 02 9949 4499 Fax 02 9949 7832
Middle Harbour Network SEG P3 TP1
balgowlahn-p.school@det.nsw.edu.au

Balgownie Public School (1106)
Balgownie Rd Balgownie 2519
Ph 02 4284 4245, 02 4284 9690 Fax 02 4284 3462
Wollongong North SEG P3 TP1
balgownie-p.school@det.nsw.edu.au

Balldale Public School (1109)
Morrissey Rd Balldale 2646
Ph 02 6035 1251 Fax 02 6035 1262
Riverina South SEG P6 TP2 A 8
balldale-p.school@det.nsw.edu.au

Ballimore Public School (1111)
Bomen St Ballimore 2830
Ph 02 6886 5151 Fax 02 6886 5167
Dubbo SEG P5 TP2 A 6
ballimore-p.school@det.nsw.edu.au

Ballina High School (8195)
Cherry St Ballina 2478
(Locked Bag 1 Ballina 2478)
Ph 02 6686 2133 Fax 02 6686 4235
Southern Cross SEG S9 TP1
ballina-h.school@det.nsw.edu.au

Ballina Public School (1112)
48 Crane St Ballina 2478
Ph 02 6686 2205, 02 6686 2584 Fax 02 6686 0692
Southern Cross SEG P3 TP1
ballina-p.school@det.nsw.edu.au

Balmain Public School (7404)
Eaton St Balmain 2041
(PO Box 321 Balmain 2041)
Ph 02 9818 1177, 02 9818 1496 Fax 02 9555 7265
Port Jackson SEG P4 TP1
balmain-p.school@det.nsw.edu.au

Balranald Central School (1115)
We St Balranald 2715
Ph 03 5020 1103, 03 5020 1412 Fax 03 5020 1769
Riverina South West SEG C2 TP6 A 7HL
balranald-c.school@det.nsw.edu.au

Bangalow Public School (1118)
Byron St Bangalow 2479
Ph 02 6687 1434 Fax 02 6687 2036
Southern Cross SEG P4 TP1
bangalow-p.school@det.nsw.edu.au

Bangor Public School (4536)
130 Menai Rd Bangor 2234
Ph 02 9543 2244 Fax 02 9543 4506
Woronora River SEG P2 TP1
bangor-p.school@det.nsw.edu.au

Banks Public School (4571)
Banks Drive St Clair 2759
Ph 02 9670 6506 Fax 02 9834 3868
Minchinbury SEG P3 TP1
banks-p.school@det.nsw.edu.au

Banksia Road Public School (4217)
65 Banksia Rd Greenacre 2190
Ph 02 9707 3423, 02 9707 3424 Fax 02 9790 5607
Bankstown SEG P3 TP1
banksiard-p.school@det.nsw.edu.au

Banksmeadow Public School (1121)
Trevelyan & Wiggins Sts Botany 2019
Ph 02 9316 9608, 02 9316 9162 Fax 02 9316 4513
Botany Bay SEG P4 TP1
banksmeado-p.school@det.nsw.edu.au

Bankstown Girls High School (8254)
Mona St Bankstown 2200
Ph 02 9709 6788, 02 9709 6823 Fax 02 9796 3971
Bankstown SEG S9 TP1
bankstowng-h.school@det.nsw.edu.au

Bankstown Hospital School (5548)
Paediatric Unit, Gallipoli St Bankstown 2200
Ph 02 9722 8063 Fax 02 9722 8068
Bankstown SEG SSP4 TP1
banksthos-s.school@det.nsw.edu.au

Bankstown North Public School (1124)
322 Hume Hwy Bankstown 2200
Ph 02 9709 5506 Fax 02 9790 0945
Bankstown SEG P3 TP1
bankstownn-p.school@det.nsw.edu.au

Bankstown Public School (7405)
Restwell St Bankstown 2200
Ph 02 9796 2120, 02 9796 2096 Fax 02 9790 3548
Bankstown SEG P1 TP1
bankstown-p.school@det.nsw.edu.au

Bankstown Senior College (8381)
Antwerp St Bankstown 2200
Ph 02 9707 3288, 02 9707 3465 Fax 02 9790 4678
Bankstown SEG S9 TP1
bankstowns-h.school@det.nsw.edu.au

Bankstown South Infants School (5246)
Stacey St Bankstown 2200
Ph 02 9790 6176 Fax 02 9790 0427
Bankstown SEG P5 TP1
bankstowsi-p.school@det.nsw.edu.au

Bankstown West Public School (4142)
William St Bankstown West 2200
Ph 02 9790 6158, 02 9790 0013 Fax 02 9796 7782
Bankstown SEG P4 TP1
bankstownw-p.school@det.nsw.edu.au

Banora Point High School (8282)
Eucalyptus Drive Banora Point 2486
(PO Box 790 Banora Point 2486)
Ph 07 5513 1960 Fax 07 5513 1220
Far North Coast SEG S9 TP1
banorapnt-h.school@det.nsw.edu.au

Banora Point Public School (1129)
Pioneer Pde Banora Point 2486
(PO Box 40 Banora Point 2486)
Ph 07 5524 1444, 07 5524 1981 Fax 07 5524 9287
Far North Coast SEG P2 TP1
banorapt-p.school@det.nsw.edu.au

Baradine Central School (1130)
Narren St Baradine 2396
Ph 02 6843 1805 Fax 02 6843 1751
Warrumbungle SEG C3 TP4 A HL
baradine-c.school@det.nsw.edu.au

Bardwell Park Infants School (5148)
4 Crewe Lane Bardwell Park 2207
Ph 02 9567 8754 Fax 02 9567 2952
Inner West SEG P5 TP1
bardwelpki-p.school@det.nsw.edu.au

Barellan Central School **(1131)**
Boree St Barellan 2665
Ph 02 6963 9202 Fax 02 6963 9302
Riverina North West SEG C4 TP4 A 9
barellan-c.school@det.nsw.edu.au

Bargo Public School **(1134)**
Southern Rd Bargo 2574
Ph 02 4684 1396 Fax 02 4684 2373
Macarthur SEG P3 TP1
bargo-p.school@det.nsw.edu.au

Barham High School **(8461)**
Gonn St Barham 2732
Ph 03 5453 2322 Fax 03 5453 3259
Riverina South West SEG S9 TP6 A 10L
barham-h.school@det.nsw.edu.au

Barham Public School **(1135)**
Wakool St Barham 2732
Ph 03 5453 2133 Fax 03 5453 2972
Riverina South West SEG P4 TP6 A 10L
barham-p.school@det.nsw.edu.au

Barkers Vale Public School **(1136)**
4501 Kyogle Rd Wadeville 2474
Ph 02 6689 7202 Fax 02 6689 7469
Richmond Valley SEG P5 TP2 A 7
barkersval-p.school@det.nsw.edu.au

Barmedman Public School **(1137)**
Robertson St Barmedman 2668
Ph 02 6976 2128 Fax 02 6976 2006
Riverina Central SEG P6 TP4 A 9
barmedman-p.school@det.nsw.edu.au

Barnier Public School **(4599)**
Barnier Drive Quakers Hill 2763
Ph 02 9837 1600 Fax 02 9837 1858
Nirimba SEG P2 TP2
barnier-p.school@det.nsw.edu.au

Barnsley Public School **(1138)**
Cliffbrook St Barnsley 2278
Ph 02 4953 2976, 02 4953 1482 Fax 02 4953 3094
Hunter/Central Coast 4 SEG P3 TP1
barnsley-p.school@det.nsw.edu.au

Barooga Public School **(1139)**
Hughes St Barooga 3644
Ph 03 5873 4242 Fax 03 5873 4700
Riverina South West SEG P4 TP2
barooga-p.school@det.nsw.edu.au

Barraba Central School **(1140)**
Gotha St Barraba 2347
Ph 02 6782 1104, 02 6782 1266 Fax 02 6782 1231
New England South SEG C3 TP4
barraba-c.school@det.nsw.edu.au

Barrack Heights Public School **(4501)**
Hunter St Barrack Heights 2528
Ph 02 4296 4222 Fax 02 4297 2818
Shellharbour SEG P3 TP1
barrackht-p.school@det.nsw.edu.au

Barrenjoey High School **(8454)**
Coonanga Road Avalon 2107
Ph 02 9918 8811, 02 9918 8907 Fax 02 9973 1682
Peninsula Network SEG S9 TP1
barrenjoey-h.school@det.nsw.edu.au

Barrington Public School **(1143)**
1 Kenmore St Barrington 2422
Ph 02 6558 4258 Fax 02 6558 4216
Lower North Coast SEG P5 TP1 A 10
barrington-p.school@det.nsw.edu.au

Barwon Learning Centre **(5762)**
Carol Ave Moree 2400
(PO Box 1485 Moree 2400)
Ph 02 6751 1573 Fax 02 6751 1569
New England West SEG SSP5 TP4 A HL
barwonlc-s.school@det.nsw.edu.au

Baryulgil Public School **(1146)**
7135 Clarence Way Baryulgil 2460
Ph 02 6647 2124 Fax 02 6647 2151
Clarence SEG P6 TP4 A 2
baryulgil-p.school@det.nsw.edu.au

Bass High School **(8223)**
Hume Hwy & Arundle Rd Bass Hill 2197
Ph 02 9726 3644 Fax 02 9724 0523
Bankstown SEG S9 TP1
bass-h.school@det.nsw.edu.au

Bass Hill Public School **(1148)**
611 Hume Hwy Bass Hill 2197
Ph 02 9644 3431, 02 9644 3181 Fax 02 9644 5271
Bankstown SEG P3 TP1
basshill-p.school@det.nsw.edu.au

Bateau Bay Public School **(4520)**
Waratah St Bateau Bay 2261
Ph 02 4332 8000 Fax 02 4334 3121
Hunter/Central Coast 1 SEG P1 TP1
bateaubay-p.school@det.nsw.edu.au

Batemans Bay High School **(8581)**
Beach Rd Batehaven 2536
Ph 02 4472 7233 Fax 02 4472 8173
Batemans Bay SEG S9 TP1
batemansba-h.school@det.nsw.edu.au

Batemans Bay Public School **(1149)**
Mundarra Way Surfside 2536
Ph 02 4472 4059 Fax 02 4472 8457
Batemans Bay SEG P2 TP1
batemansba-p.school@det.nsw.edu.au

Bates Drive School **(5647)**
Bates Drive Kareela 2232
Ph 02 9521 6049 Fax 02 9545 3317
Network 8 SEG SSP4 TP1
batesdrive-s.school@det.nsw.edu.au

Bathurst Public School **(1150)**
George St Bathurst 2795
Ph 02 6331 3923 Fax 02 6332 2305
Bathurst SEG P3 TP1 A C
bathurst-p.school@det.nsw.edu.au

Bathurst South Public School **(3847)**
Havannah St Bathurst 2795
Ph 02 6331 1297 Fax 02 6332 1634
Bathurst SEG P4 TP1 A C
bathursts-p.school@det.nsw.edu.au

Bathurst West Public School **(3824)**
Suttor St Bathurst 2795
Ph 02 6331 1142, 02 6331 1386 Fax 02 6332 2319
Bathurst SEG P3 TP1 A C
bathurstw-p.school@det.nsw.edu.au

Batlow Technology School **(1152)**
Pioneer St Batlow 2730
Ph 02 6949 1208 Fax 02 6949 1666
Riverina East SEG C3 TP4 A 10C
batlow-c.school@det.nsw.edu.au

Baulkham Hills High School **(8464)**
Windsor Rd Baulkham Hills 2153
Ph 02 9639 8699, 02 9639 0034 Fax 02 9639 4999
The Hills SEG S8 TP1
baulkham-h.school@det.nsw.edu.au

Baulkham Hills North Public School **(4377)**
2A Girralong Ave Baulkham Hills 2153
Ph 02 9639 6936, 02 9639 8682 Fax 02 9686 3390
Hills Network SEG P2 TP1
baulkhamn-p.school@det.nsw.edu.au

Beach School, The **(5579)**
Malinya Rd Allambie 2100
Ph 02 9905 9451 Fax 02 9905 9436
Middle Harbour Network SEG SSP5 TP1
beach-s.school@det.nsw.edu.au

Beacon Hill Public School **(3971)**
Tristram Rd Beacon Hill 2100
Ph 02 9451 6328, 02 9451 3627 Fax 02 9975 4631
Middle Harbour Network SEG P2 TP1
beaconhill-p.school@det.nsw.edu.au

Beaumont Hills Public School **(4630)**
The Parkway Beaumont Hills 2155
Ph 02 8824 6470 Fax 02 8824 6473
The Hills SEG P2 TP1
beaumonthi-p.school@det.nsw.edu.au

Beaumont Road Public School **(3956)**
17 Beaumont Road Killara 2071
Ph 02 9498 3607 Fax 02 9498 8395
North Shore Network SEG P4 TP1
beaumontrd-p.school@det.nsw.edu.au

Beauty Point Public School **(5212)**
17 Medusa St Mosman 2088
Ph 02 9969 4260 Fax 02 9968 1210
Middle Harbour Network SEG P4 TP1
beautypt-p.school@det.nsw.edu.au

Beckom Public School **(1160)**
Welman St Beckom 2665
Ph 02 6978 2314 Fax 02 6978 2342
Riverina North West SEG P6 TP4 A 8
beckom-p.school@det.nsw.edu.au

Bedgerebong Public School **(1164)**
North Condobolin Rd Bedgerebong 2871
Ph 02 6857 1185 Fax 02 6857 1118
Lachlan SEG P5 TP4 A 6
bedgerebon-p.school@det.nsw.edu.au

Beechwood Public School **(1165)**
614 Beechwood Road Wauchope 2446
Ph 02 6585 6136 Fax 02 6585 6000
Hastings SEG P5 TP1
beechwood-p.school@det.nsw.edu.au

Beecroft Public School **(1166)**
98 Beecroft Rd Beecroft 2119
Ph 02 9484 8844 Fax 02 9484 8200
Hills Network SEG P1 TP1
beecroft-p.school@det.nsw.edu.au

Beelbangera Public School **(1167)**
Rankins Springs Rd Beelbangera 2680
Ph 02 6963 5368 Fax 02 6963 5506
Riverina West SEG P4 TP2
beelbanger-p.school@det.nsw.edu.au

Bega High School **(8165)**
Upper & Eden Sts Bega 2550
Ph 02 6492 1800, 02 6492 9000 Fax 02 6492 3996
Sapphire Coast/Monaro SEG S8 TP1
bega-h.school@det.nsw.edu.au

Bega Public School **(1168)**
27 Auckland St Bega 2550
Ph 02 6492 1280, 02 6492 1596 Fax 02 6492 3965
Sapphire Coast/Monaro SEG P4 TP1
bega-p.school@det.nsw.edu.au

Bega West Public School **(4137)**
Rawlinson & Ravenswood Sts Bega 2550
Ph 02 6492 1499 Fax 02 6492 1989
Sapphire Coast/Monaro SEG P4 TP1
begawest-p.school@det.nsw.edu.au

Belair Public School (4370)
Carolyn St Adamstown 2289
Ph 02 4952 1735, 02 4952 2257 Fax 02 4956 2450
Hunter/Central Coast 5 SEG P3 TP1
belair-p.school@det.nsw.edu.au

Bellambi Public School (3979)
Owen Park Rd Bellambi 2518
Ph 02 4284 8666 Fax 02 4285 2723
Wollongong North SEG P4 TP1
bellambi-p.school@det.nsw.edu.au

Bellata Public School (1175)
Gurley St Bellata 2397
Ph 02 6793 7514 Fax 02 6793 7462
New England West SEG P5 TP6 A 6L
bellata-p.school@det.nsw.edu.au

Bellbird Public School (1177)
Doyle St Bellbird 2325
(PO Box 484 Cessnock 2325)
Ph 02 4990 2331 Fax 02 4991 1973
Hunter/Central Coast 9 SEG P4 TP1
bellbird-p.school@det.nsw.edu.au

Bellbrook Public School (1178)
Main St Bellbrook 2440
Ph 02 6567 2049 Fax 02 6567 2113
Hastings SEG P5 TP2 A 4
bellbrook-p.school@det.nsw.edu.au

Bellevue Hill Public School (1179)
Victoria Rd Bellevue Hill 2023
Ph 02 9389 3928, 02 9389 5526 Fax 02 9369 4651
Network 8 SEG P3 TP1
bellevuehi-p.school@det.nsw.edu.au

Bellimbopinni Public School (1180)
Pacific Hwy Kempsey 2440
Ph 02 6567 4596 Fax 02 6567 4867
Hastings SEG P5 TP1
bellimbopi-p.school@det.nsw.edu.au

Bellingen High School (8258)
1125 Waterfall Way Bellingen 2454
(PO Box 203 Bellingen 2454)
Ph 02 6655 1315 Fax 02 6655 2630
Mid North Coast SEG S9 TP1
bellingen-h.school@det.nsw.edu.au

Bellingen Public School (1181)
William St Bellingen 2454
(PO Box 42 Bellingen 2454)
Ph 02 6655 1147 Fax 02 6655 2615
Mid North Coast SEG P4 TP1
bellingen-p.school@det.nsw.edu.au

Belltrees Public School (1182)
Moonan Flat Rd Belltrees 2337
Ph 02 6546 1148 Fax 02 6546 1110
Hunter/Central Coast 8 SEG P6 TP4 A 6
belltrees-p.school@det.nsw.edu.au

Belmont High School (8203)
424 Pacific Highway Belmont 2280
(PO Box 2345 Gateshead MDC 2290)
Ph 02 4945 0600 Fax 02 4947 7531
Hunter/Central Coast 7 SEG S8 TP1
belmont-h.school@det.nsw.edu.au

Belmont North Public School (3927)
Nikkin & Darling Sts Belmont 2280
Ph 02 4945 4861, 02 4945 2047 Fax 02 4947 7851
Hunter/Central Coast 7 SEG P4 TP1
belmontnth-p.school@det.nsw.edu.au

Belmont Public School (1183)
Livingstone St Belmont 2280
Ph 02 4945 4858, 02 4945 4377 Fax 02 4947 7823
Hunter/Central Coast 7 SEG P4 TP1
belmont-p.school@det.nsw.edu.au

Belmore Boys High School (8804)
Burwood Rd Belmore 2192
Ph 02 9758 2800 Fax 02 9740 5834
Strathfield SEG S9 TP1
belmoreboy-h.school@det.nsw.edu.au

Belmore North Public School (1185)
Burwood Rd Belmore 2192
Ph 02 9750 0652 Fax 02 9758 1109
Strathfield SEG P3 TP1
belmorenth-p.school@det.nsw.edu.au

Belmore South Public School (1186)
Nelson Ave & Canterbury Rd Belmore 2192
Ph 02 9759 4388, 02 9759 2955 Fax 02 9740 4323
Strathfield SEG P3 TP1
belmoresth-p.school@det.nsw.edu.au

Belrose Public School (3748)
Ralston Ave Belrose 2085
Ph 02 9451 6203, 02 9452 4426 Fax 02 9975 5047
Middle Harbour Network SEG P2 TP1
belrose-p.school@det.nsw.edu.au

Bemboka Public School (1189)
Kameruka St Bemboka 2550
Ph 02 6493 0229 Fax 02 6493 0452
Sapphire Coast/Monaro SEG P5 TP1 A 8
bemboka-p.school@det.nsw.edu.au

Ben Lomond Public School (1196)
Inn Rd Ben Lomond 2365
Ph 02 6733 2001 Fax 02 6733 2104
New England North SEG P6 TP4 A 7C
benlomond-p.school@det.nsw.edu.au

Ben Venue Public School (1198)
Erskine St Armidale 2350
Ph 02 6772 4263, 02 6772 6102 Fax 02 6771 2037
New England Central SEG P2 TP1 A C
benvenue-p.school@det.nsw.edu.au

Bendemeer Public School **(1191)**
Charles St Bendemeer 2355
Ph 02 6769 6532 Fax 02 6769 6400
New England Central SEG P6 TP2 A 6C
bendemeer-p.school@det.nsw.edu.au

Bendick Murrell Public School **(1192)**
Little St Bendick Murrell 2803
Ph 02 6383 7215 Fax 02 6383 7240
Riverina North SEG P6 TP4 A 7
bendickmur-p.school@det.nsw.edu.au

Bennett Road Public School **(4285)**
100-114 Bennett Rd Colyton 2760
(PO Box 3059 St Marys South 2760)
Ph 02 9623 2018, 02 9623 1805 Fax 02 9833 1037
Minchinbury SEG P2 TP2
bennettrd-p.school@det.nsw.edu.au

Berala Public School **(1199)**
Harrow Rd Berala 2141
Ph 02 9649 7146, 02 9649 6842 Fax 02 9749 2298
Bankstown SEG P1 TP1
berala-p.school@det.nsw.edu.au

Beresfield Public School **(1201)**
Lawson Ave Beresfield 2322
(PO Box 186 Beresfield 2322)
Ph 02 4966 1146 Fax 02 4966 2492
Hunter/Central Coast 4 SEG P3 TP1
beresfield-p.school@det.nsw.edu.au

Beresford Road Public School **(4405)**
Beresford Rd Greystanes 2145
Ph 02 9896 2644 Fax 02 9896 3172
Cumberland SEG P3 TP1
beresfdrd-p.school@det.nsw.edu.au

Berinba Public School **(4450)**
Church St Yass 2582
(PO Box 95 Yass 2582)
Ph 02 6226 2110 Fax 02 6226 3194
Queanbeyan SEG P4 TP2
berinba-p.school@det.nsw.edu.au

Berkeley Public School **(1202)**
George St Berkeley 2506
Ph 02 4271 1171 Fax 02 4271 4304
Wollongong SEG P3 TP1
berkeley-p.school@det.nsw.edu.au

Berkeley South Public School **(4295)**
Essex St Berkeley 2506
Ph 02 4271 1659 Fax 02 4271 2844
Wollongong SEG P5 TP1
berkeleys-p.school@det.nsw.edu.au

Berkeley Vale Public School **(1203)**
Pindarri Ave Berkeley Vale 2259
Ph 02 4388 1796 Fax 02 4389 1178
Hunter/Central Coast 1 SEG P1 TP1
berkeleyva-p.school@det.nsw.edu.au

Berkeley West Public School **(4180)**
Nolan St Berkeley 2506
(PO Box 56 Berkeley NSW 2506)
Ph 02 4271 1478 Fax 02 4271 5334
Wollongong SEG P4 TP1
berkeleyw-p.school@det.nsw.edu.au

Bermagui Public School **(1204)**
George St Bermagui 2546
Ph 02 6493 4271 Fax 02 6493 4425
Batemans Bay SEG P4 TP1
bermagui-p.school@det.nsw.edu.au

Berowra Public School **(1205)**
Hillcrest Rd Berowra 2081
Ph 02 9456 1319, 02 9456 1483 Fax 02 9456 3375
Hornsby Network SEG P3 TP1
berowra-p.school@det.nsw.edu.au

Berridale Public School **(1206)**
Oliver St Berridale 2628
Ph 02 6456 3228 Fax 02 6456 3429
Sapphire Coast/Monaro SEG P5 TP2 A 10C
berridale-p.school@det.nsw.edu.au

Berrigan Public School **(1207)**
25-29 Momalong St Berrigan 2712
(PO Box 122 Berrigan 2712)
Ph 03 5885 2209 Fax 03 5885 2661
Riverina South West SEG P5 TP4
berrigan-p.school@det.nsw.edu.au

Berrima Public School **(1209)**
Oxley St Berrima 2577
Ph 02 4877 1262 Fax 02 4877 1041
Goulburn/Highlands SEG P5 TP1
berrima-p.school@det.nsw.edu.au

Berry Public School **(1211)**
Victoria St Berry 2535
Ph 02 4464 1158 Fax 02 4464 1664
Shoalhaven SEG P4 TP1
berry-p.school@det.nsw.edu.au

Bert Oldfield Public School **(4192)**
Oldfield Rd Seven Hills 2147
Ph 02 9622 2122, 02 9622 7479 Fax 02 9621 2521
Nirimba SEG P4 TP1
bertoldfie-p.school@det.nsw.edu.au

Beverley Park School **(5508)**
Beverley Rd Campbelltown 2560
Ph 02 4625 1118, 02 4625 0122 Fax 02 4628 1779
Campbelltown SEG SSP4 TP2
beverleypk-s.school@det.nsw.edu.au

Beverly Hills Girls High School **(8255)**
Broadarrow & King Georges Rds Beverly Hills 2209
Ph 02 9150 4280, 02 9150 4676 Fax 02 9502 1280
East Hills SEG S8 TP1
beverlyhg-h.school@det.nsw.edu.au

Beverly Hills North Public School **(3944)**
Shorter Ave & King Georges Rd Beverly Hills 2209
Ph 02 9759 3849, 02 9759 5464 Fax 02 9740 4372
East Hills SEG P2 TP1
beverlyhn-p.school@det.nsw.edu.au

Beverly Hills Public School **(1215)**
Stoney Creek & King Georges Rds Beverly Hills 2209
Ph 02 9580 5074, 02 9580 5066 Fax 02 9580 7052
Inner West SEG P2 TP1
beverlyhi-p.school@det.nsw.edu.au

Bexhill Public School **(1217)**
Withers St Bexhill 2480
Ph 02 6628 4223 Fax 02 6628 4248
The Wilson SEG P5 TP1 A 10
bexhill-p.school@det.nsw.edu.au

Bexley North Public School **(2308)**
116 Kingsland Rd Bexley 2207
Ph 02 9150 6171 Fax 02 9554 3514
Inner West SEG P3 TP1
bexleynth-p.school@det.nsw.edu.au

Bexley Public School **(7406)**
Forest Rd Bexley 2207
Ph 02 9567 3501 Fax 02 9597 1365
Inner West SEG P3 TP1
bexley-p.school@det.nsw.edu.au

Bibbenluke Public School **(1219)**
Burnima St Bibbenluke 2632
Ph 02 6458 5230 Fax 02 6458 5253
Sapphire Coast/Monaro SEG P6 TP4 A 10C
bibbenluke-p.school@det.nsw.edu.au

Biddabah Public School **(4206)**
Medcalf St Warners Bay 2282
Ph 02 4954 6058 Fax 02 4956 6780
Hunter/Central Coast 7 SEG P3 TP1
biddabah-p.school@det.nsw.edu.au

Bidgee School, The **(5758)**
21 Mitchelmore St Wagga Wagga 2650
Ph 02 6925 4403 Fax 02 6925 5812
Riverina North SEG SSP5 TP0
thebidgee-s.school@det.nsw.edu.au

Bidwill Public School **(4480)**
Bunya Rd Bidwill 2770
Ph 02 9628 2444 Fax 02 9628 0480
Mt Druitt SEG P2 TP4
bidwill-p.school@det.nsw.edu.au

Bigga Public School **(1223)**
Blackman St Bigga 2583
Ph 02 4835 2236 Fax 02 4835 2246
Queanbeyan SEG P6 TP4 A 5
bigga-p.school@det.nsw.edu.au

Bilambil Public School **(1224)**
Bilambil Rd Bilambil 2486
Ph 07 5590 7210 Fax 07 5590 7075
Far North Coast SEG P3 TP1
bilambil-p.school@det.nsw.edu.au

Bilbul Public School **(1225)**
The Crescent Bilbul 2680
(PO Box 42 Bilbul 2680)
Ph 02 6963 5369 Fax 02 6963 5507
Riverina West SEG P5 TP2
bilbul-p.school@det.nsw.edu.au

Bilgola Plateau Public School **(4359)**
Plateau Rd Bilgola Plateau 2107
Ph 02 9918 6524, 02 9918 9322 Fax 02 9973 1674
Peninsula Network SEG P3 TP1
bilgolapla-p.school@det.nsw.edu.au

Billabong High School **(8503)**
Gordon St Culcairn 2660
Ph 02 6029 8377 Fax 02 6029 8833
Riverina Central SEG S9 TP2
billabong-h.school@det.nsw.edu.au

Bilpin Public School **(1228)**
Bells Line of Road Bilpin 2758
Ph 02 4567 1154 Fax 02 4567 1388
Hawkesbury SEG P5 TP1
bilpin-p.school@det.nsw.edu.au

Binalong Public School **(1230)**
Dickinson St Binalong 2584
Ph 02 6227 4381 Fax 02 6227 4380
Riverina North SEG P6 TP2 A 8
binalong-p.school@det.nsw.edu.au

Binda Public School **(1231)**
Queen St Binda 2583
Ph 02 4835 6052 Fax 02 4835 6092
Queanbeyan SEG P6 TP2
binda-p.school@det.nsw.edu.au

Bingara Central School **(1234)**
Finch St Bingara 2404
Ph 02 6724 1606 Fax 02 6724 1927
New England West SEG C3 TP4 A 10
bingara-c.school@det.nsw.edu.au

Binnaway Central School **(1237)**
David St Binnaway 2395
Ph 02 6844 1606 Fax 02 6844 1601
Warrumbungle SEG C4 TP4 A 10
binnaway-c.school@det.nsw.edu.au

Binya Public School **(1238)**
Barellan-Yenda Rd Binya 2665
Ph 02 6968 3221 Fax 02 6968 3206
Riverina North West SEG P6 TP4 A 8
binya-p.school@det.nsw.edu.au

Biraban Public School **(3988)**
Beckley St Toronto 2283
Ph 02 4959 1902 Fax 02 4950 4901
Hunter/Central Coast 6 SEG P4 TP1
biraban-p.school@det.nsw.edu.au

Birchgrove Public School **(1240)**
Birchgrove Rd Balmain 2041
Ph 02 9810 2469, 02 9810 2721 Fax 02 9555 8653
Port Jackson SEG P3 TP1
birchgrove-p.school@det.nsw.edu.au

Birrong Boys High School **(8213)**
Rodd St Birrong 2143
Ph 02 9644 5200 Fax 02 9743 7009
Bankstown SEG S9 TP1
birrongboy-h.school@det.nsw.edu.au

Birrong Girls High School **(8854)**
Cooper Rd Birrong 2143
Ph 02 9644 5057, 02 9644 9109 Fax 02 9644 8157
Bankstown SEG S9 TP1
birronggir-h.school@det.nsw.edu.au

Birrong Public School **(4057)**
132 Auburn Rd Birrong 2143
Ph 02 9644 3078 Fax 02 9743 8143
Bankstown SEG P2 TP1
birrong-p.school@det.nsw.edu.au

Black Hill Public School **(1247)**
408 Black Hill Rd Black Hill 2322
Ph 02 4930 3137 Fax 02 4930 3105
Hunter/Central Coast 4 SEG P5 TP1
blackhill-p.school@det.nsw.edu.au

Black Mountain Public School **(1249)**
815 Black Mountain Rd Black Mountain 2365
Ph 02 6775 0192 Fax 02 6775 0228
New England North SEG P5 TP4 A 10C
blackmtn-p.school@det.nsw.edu.au

Black Springs Public School **(4190)**
Avoca St Black Springs via Bathurst 2787
Ph 02 6335 8155 Fax 02 6335 8178
Bathurst SEG P6 TP4 A C
blacksprin-p.school@det.nsw.edu.au

Blackalls Park Public School **(3966)**
Charles St Blackalls Park 2283
Ph 02 4959 1213 Fax 02 4950 4913
Hunter/Central Coast 6 SEG P4 TP1
blackallpk-p.school@det.nsw.edu.au

Blackett Public School **(4453)**
47-59 Boldrewood Rd Blackett 2770
Ph 02 9628 7760, 02 9628 6898 Fax 02 9628 0985
Mt Druitt SEG P3 TP4
blackett-p.school@det.nsw.edu.au

Blackheath Public School **(1246)**
Leichhardt St Blackheath 2785
Ph 02 4787 8253, 02 4787 8770 Fax 02 4787 8320
Blue Mountains SEG P4 TP1
blackheath-p.school@det.nsw.edu.au

Blacksmiths Public School **(4197)**
Amaroo St Blacksmiths 2281
Ph 02 4971 1519 Fax 02 4972 1407
Hunter/Central Coast 7 SEG P5 TP1
blacksmith-p.school@det.nsw.edu.au

Blacktown Boys High School **(8244)**
Sunnyholt Rd & Fifth Ave Blacktown 2148
(PO Box 6627 Blacktown DC 2148)
Ph 02 9622 1558, 02 9622 1559 Fax 02 9831 2282
Nirimba SEG S9 TP2
blacktownb-h.school@det.nsw.edu.au

Blacktown Girls High School **(8224)**
Fifth Ave Blacktown 2148
Ph 02 9831 7577 Fax 02 9831 7838
Nirimba SEG S8 TP2
blacktowng-h.school@det.nsw.edu.au

Blacktown North Public School **(4061)**
1 Bessemer St Blacktown 2148
Ph 02 9622 2968, 02 9622 2277 Fax 02 9831 3519
Nirimba SEG P5 TP2
blacktownn-p.school@det.nsw.edu.au

Blacktown South Public School **(4193)**
183 Flushcombe Rd Blacktown 2148
Ph 02 9622 2449, 02 9622 6034 Fax 02 9831 2379
Nirimba SEG P1 TP2
blacktowns-p.school@det.nsw.edu.au

Blacktown West Public School **(4116)**
Lancaster St Blacktown 2148
Ph 02 9622 2285, 02 9622 3937 Fax 02 9621 7918
Minchinbury SEG P2 TP2
blacktownw-p.school@det.nsw.edu.au

Blackville Public School **(1252)**
O'Neile St Blackville 2343
Ph 02 6747 4024 Fax 02 6747 4100
New England South SEG P6 TP4 A 4
blackville-p.school@det.nsw.edu.au

Blackwell Public School **(4559)**
Blackwell Ave St Clair 2759
Ph 02 9670 5080 Fax 02 9834 4368
Minchinbury SEG P2 TP2
blackwell-p.school@det.nsw.edu.au

Blairmount Public School **(4535)**
Badgally Rd Blairmount 2559
Ph 02 4626 1795 Fax 02 4628 0594
Campbelltown SEG P2 TP2
blairmount-p.school@det.nsw.edu.au

Blakebrook Public School **(1254)**
Rosehill Rd Blakebrook 2480
Ph 02 6629 3263 Fax 02 6629 3181
The Wilson SEG P5 TP1 A 10
blakebrook-p.school@det.nsw.edu.au

Blakehurst High School **(8236)**
270A Woniora Rd Blakehurst 2221
Ph 02 9546 3281, 02 9546 3282 Fax 02 9547 1024
Georges River SEG S9 TP1
blakehurst-h.school@det.nsw.edu.au

Blakehurst Public School **(1255)**
Dewrang St Blakehurst 2221
Ph 02 9546 1555, 02 9546 5185 Fax 02 9547 1796
Georges River SEG P3 TP1
blakehurst-p.school@det.nsw.edu.au

Blandford Public School **(1256)**
New England Hwy Blandford 2338
Ph 02 6546 6117 Fax 02 6546 6023
Hunter/Central Coast 8 SEG P5 TP2 A 9
blandford-p.school@det.nsw.edu.au

Blaxcell Street Public School **(1257)**
Blaxcell St Granville 2142
Ph 02 9632 8162, 02 9632 8560 Fax 02 9892 2713
Granville SEG P1 TP1
blaxcellst-p.school@det.nsw.edu.au

Blaxland East Public School **(4313)**
Old Bathurst Rd Blaxland 2774
Ph 02 4739 1579, 02 4739 1766 Fax 02 4739 8300
Blue Mountains SEG P3 TP1
blaxlande-p.school@det.nsw.edu.au

Blaxland High School **(8522)**
Coughlan Rd Blaxland 2774
Ph 02 4739 4655, 02 4739 4667 Fax 02 4739 8237
Blue Mountains SEG S8 TP1
blaxland-h.school@det.nsw.edu.au

Blaxland Public School **(1258)**
Great Western Hwy Blaxland 2774
Ph 02 4739 2817 Fax 02 4739 8630
Blue Mountains SEG P4 TP1
blaxland-p.school@det.nsw.edu.au

Blayney High School **(8357)**
Water St Blayney 2799
Ph 02 6368 2100 Fax 02 6368 3351
Orange SEG S9 TP2
blayney-h.school@det.nsw.edu.au

Blayney Public School **(1260)**
Lindsay St Blayney 2799
Ph 02 6368 2154 Fax 02 6368 3019
Orange SEG P4 TP2
blayney-p.school@det.nsw.edu.au

Bletchington Public School **(5265)**
Matthews Ave Orange 2800
Ph 02 6362 3422 Fax 02 6361 7532
Orange SEG P2 TP1
bletchingt-p.school@det.nsw.edu.au

Bligh Park Public School **(4585)**
Alexander St Bligh Park 2756
Ph 02 4572 7067, 02 4572 7068 Fax 02 4572 6642
Hawkesbury SEG P2 TP1
blighpark-p.school@det.nsw.edu.au

Blighty Public School **(1261)**
Blighty School Rd Blighty 2713
(RMB 1095 Finley 2713)
Ph 03 5882 6238 Fax 03 5882 6248
Riverina South West SEG P5 TP4 A 8
blighty-p.school@det.nsw.edu.au

Blue Haven Public School **(4623)**
37 Colorado Drive Blue Haven 2262
Ph 02 4399 0167 Fax 02 4399 0184
Hunter/Central Coast 1 SEG P2 TP1
bluehaven-p.school@det.nsw.edu.au

Boambee Public School **(1266)**
30 Lindsays Rd Boambee 2450
Ph 02 6653 1107 Fax 02 6658 2543
Coffs Harbour SEG P3 TP1
boambee-p.school@det.nsw.edu.au

Bobin Public School **(1269)**
Bulga Rd Bobin 2429
Ph 02 6550 5147 Fax 02 6550 5049
Lower North Coast SEG P6 TP2 A 7
bobin-p.school@det.nsw.edu.au

Bobs Farm Public School **(1271)**
764 Marsh Rd Bobs Farm 2316
Ph 02 4982 1179 Fax 02 4982 1982
Hunter/Central Coast 10 SEG P5 TP1
bobsfarm-p.school@det.nsw.edu.au

Bodalla Public School **(1272)**
Potato Point Rd Bodalla 2545
Ph 02 4473 5257 Fax 02 4473 5254
Batemans Bay SEG P4 TP1 A 10
bodalla-p.school@det.nsw.edu.au

Bogan Gate Public School **(1274)**
Bogan St Bogan Gate 2876
Ph 02 6864 1124 Fax 02 6864 1046
Lachlan SEG P5 TP4 A 7
bogangate-p.school@det.nsw.edu.au

Bogangar Public School **(4632)**
Coast Rd Bogangar 2488
Ph 02 6676 2755 Fax 02 6676 2733
Far North Coast SEG P3 TP1
bogangar-p.school@det.nsw.edu.au

Boggabilla Central School **(1275)**
South St Boggabilla 2409
(PO Box 218 Boggabilla 2409)
Ph 07 4676 2104 Fax 07 4676 2442
New England West SEG C3 TP6 A 10HL
boggabilla-c.school@det.nsw.edu.au

Boggabri Public School **(1276)**
Merton St Boggabri 2382
Ph 02 6743 4526 Fax 02 6743 4276
New England South SEG P5 TP4 A 10
boggabri-p.school@det.nsw.edu.au

Bolwarra Public School **(1286)**
Bolwarra Rd Bolwarra 2320
Ph 02 4930 1296 Fax 02 4930 0032
Hunter/Central Coast 9 SEG P3 TP1
bolwarra-p.school@det.nsw.edu.au

Bomaderry High School **(8448)**
Cambewarra Rd Bomaderry 2541
Ph 02 4421 0699 Fax 02 4423 2732
Shoalhaven SEG S8 TP1
bomaderry-h.school@det.nsw.edu.au

Bomaderry Public School **(1287)**
Cambewarra Rd Bomaderry 2541
Ph 02 4421 6577 Fax 02 4423 1847
Shoalhaven SEG P3 TP1
bomaderry-p.school@det.nsw.edu.au

Bombala High School **(8486)**
Bright Street Bombala 2632
Ph 02 6458 3358 Fax 02 6458 3866
Sapphire Coast/Monaro SEG S9 TP4 A 10C
bombala-h.school@det.nsw.edu.au

Bombala Public School **(1288)**
8 Bright St Bombala 2632
(PO Box 40 Bombala 2632)
Ph 02 6458 3423 Fax 02 6458 3376
Sapphire Coast/Monaro SEG P5 TP4 A 10C
bombala-p.school@det.nsw.edu.au

Bonalbo Central School **(1290)**
Yabbra St Bonalbo 2469
Ph 02 6665 1205 Fax 02 6665 1251
Richmond Valley SEG C3 TP4 A 5
bonalbo-c.school@det.nsw.edu.au

Bondi Beach Public School **(1292)**
Campbell Pde Bondi Beach 2026
Ph 02 9130 2116, 02 9130 6170 Fax 02 9130 3932
Port Jackson SEG P4 TP1
bondibeach-p.school@det.nsw.edu.au

Bondi Public School **(7407)**
Wellington St Bondi 2026
Ph 02 9130 6998, 02 9130 8970 Fax 02 9130 3203
Port Jackson SEG P5 TP1
bondi-p.school@det.nsw.edu.au

Bongongo Public School **(1293)**
Adjungbilly Rd Adjungbilly via Coolac 2727
Ph 02 6946 6214 Fax 02 6946 6207
Riverina East SEG P6 TP4
bongongo-p.school@det.nsw.edu.au

Bonnells Bay Public School **(2532)**
Morisset Park Rd Bonnells Bay 2264
Ph 02 4973 1149 Fax 02 4970 5487
Hunter/Central Coast 6 SEG P3 TP1
bonnellbay-p.school@det.nsw.edu.au

Bonnet Bay Public School **(4507)**
Tudar Rd Bonnet Bay 2226
Ph 02 9528 4111 Fax 02 9528 4191
Port Hacking SEG P5 TP1
bonnetbay-p.school@det.nsw.edu.au

Bonnyrigg Heights Public School **(4594)**
Wilson Rd Bonnyrigg Heights 2177
Ph 02 9823 7000, 02 9823 7205 Fax 02 9823 7226
Hoxton SEG P2 TP1
bonnyriggh-p.school@det.nsw.edu.au

Bonnyrigg High School **(8260)**
Elizabeth Drive Bonnyrigg 2177
Ph 02 9823 1184, 02 9823 1186 Fax 02 9823 7662
Fairfield SEG S9 TP2
bonnyrigg-h.school@det.nsw.edu.au

Bonnyrigg Public School **(4545)**
Tarlington Pde Bonnyrigg 2177
(PO Box 107 Bonnyrigg 2177)
Ph 02 9610 1511 Fax 02 9823 7826
Fairfield SEG P4 TP2
bonnyrigg-p.school@det.nsw.edu.au

Bonshaw Public School **(1296)**
Texas St Bonshaw 2361
Ph 07 4653 5147 Fax 07 4653 5232
New England North SEG P6 TP6 A 6HL
bonshaw-p.school@det.nsw.edu.au

Bonville Public School **(1297)**
11 Gleniffer Rd Bonville 2441
Ph 02 6653 4250 Fax 02 6653 4092
Coffs Harbour SEG P5 TP1 A 10
bonville-p.school@det.nsw.edu.au

Boolaroo Public School **(1302)**
Main Rd & Second St Boolaroo 2284
Ph 02 4958 1479 Fax 02 4958 2208
Hunter/Central Coast 6 SEG P5 TP1
boolaroo-p.school@det.nsw.edu.au

Booligal Public School **(1303)**
Harvey St Booligal 2711
Ph 02 6993 8107 Fax 02 6993 8167
Riverina West SEG P6 TP8 A 2HL
booligal-p.school@det.nsw.edu.au

Boomi Public School **(1307)**
Werrina Street Boomi 2405
Ph 02 6753 5221 Fax 02 6753 5332
New England West SEG P5 TP8 A 2HL
boomi-p.school@det.nsw.edu.au

Booragul Public School **(4017)**
Aspinall St Booragul 2284
Ph 02 4958 2013 Fax 02 4958 3152
Hunter/Central Coast 6 SEG P4 TP1
booragul-p.school@det.nsw.edu.au

Booral Public School **(1311)**
2800 Bucketts Way Booral 2425
Ph 02 4994 9266 Fax 02 4994 9102
Lower North Coast SEG P5 TP1
booral-p.school@det.nsw.edu.au

Boorowa Central School **(1313)**
Pudman St Boorowa 2586
Ph 02 6385 3009 Fax 02 6385 3409
Queanbeyan SEG C3 TP4
boorowa-c.school@det.nsw.edu.au

Boree Creek Public School **(1318)**
Lockhart-Morundah Rd Boree Creek 2652
Ph 02 6927 1478 Fax 02 6927 1476
Riverina West SEG P6 TP4 A 8
boreecreek-p.school@det.nsw.edu.au

Borenore Public School **(3504)**
Forbes Rd Borenore 2800
Ph 02 6365 2262 Fax 02 6365 2318
Orange SEG P6 TP1 A 10
borenore-p.school@det.nsw.edu.au

Boronia Park Public School **(1320)**
113 Pittwater Rd Hunters Hill 2110
Ph 02 9817 2778, 02 9816 5346 Fax 02 9816 3263
Lane Cove Network SEG P3 TP1
boroniapk-p.school@det.nsw.edu.au

Bossley Park High School **(8582)**
Prairievale Rd Bossley Park 2176
Ph 02 9823 1033 Fax 02 9823 7835
Hoxton SEG S8 TP2
bossleypk-h.school@det.nsw.edu.au

Bossley Park Public School **(1321)**
Marconi Rd Bossley Park 2176
Ph 02 9610 6286 Fax 02 9823 4832
Hoxton SEG P3 TP2
bossleypk-p.school@det.nsw.edu.au

Botany Bay Environmental Education Centre **(5741)**
Botany Bay National Park Kurnell 2231
Ph 02 9668 2070 Fax 02 9668 2080
Port Hacking SEG EEC1 TP1
botanybay-e.school@det.nsw.edu.au

Botany Public School **(1323)**
1076 Botany Rd Botany 2019
Ph 02 9316 8889, 02 9316 8003 Fax 02 9316 4086
Network 8 SEG P4 TP1
botany-p.school@det.nsw.edu.au

Bourke High School **(8355)**
34 Tarcoon St Bourke 2840
Ph 02 6872 2560 Fax 02 6872 3267
Bourke SEG S9 TP6 A 8HL
bourke-h.school@det.nsw.edu.au

Bourke Public School **(1326)**
Green St Bourke 2840
Ph 02 6872 2051, 02 6872 2424 Fax 02 6872 2278
Bourke SEG P4 TP6 A 8HL
bourke-p.school@det.nsw.edu.au

Bourke Street Public School **(7408)**
590 Bourke St Surry Hills 2010
Ph 02 9319 7310, 02 9699 1571 Fax 02 9310 2708
Inner City SEG P5 TP1
bourkest-p.school@det.nsw.edu.au

Bourke-Walgett School of Distance Education **(4644)**
Green Street Bourke 2840
Ph 02 6872 2424 Fax 02 6872 3109
Bourke SEG P4 TP0 A L
bourkewalg-d.school@det.nsw.edu.au

Bournda Environmental Education Centre **(5679)**
Bournda National Park Kalaru 2550
Ph 02 6494 5009 Fax 02 6494 5011
Sapphire Coast/Monaro SEG EEC2 TP1 A 10
bournda-e.school@det.nsw.edu.au

Bowen Public School **(4538)**
Park St Orange 2800
Ph 02 6362 3655, 02 6362 0223 Fax 02 6361 7603
Orange SEG P4 TP1
bowen-p.school@det.nsw.edu.au

Bowning Public School **(1334)**
147 Bowning Road Bowning 2582
Ph 02 6227 6093 Fax 02 6227 6121
Queanbeyan SEG P5 TP2
bowning-p.school@det.nsw.edu.au

Bowral High School **(8104)**
Park & Aitken Rds Bowral 2576
Ph 02 4861 2255 Fax 02 4861 2184
Goulburn/Highlands SEG S8 TP1
bowral-h.school@det.nsw.edu.au

Bowral Public School **(1335)**
Bendooley St Bowral 2576
(PO Box 865 Bowral 2576)
Ph 02 4861 1086, 02 4861 1208 Fax 02 4862 1004
Goulburn/Highlands SEG P2 TP1
bowral-p.school@det.nsw.edu.au

Bowraville Central School **(1336)**
High St Bowraville 2449
Ph 02 6564 7162 Fax 02 6564 7801
Mid North Coast SEG C2 TP1
bowraville-c.school@det.nsw.edu.au

Bradbury Public School **(4403)**
Jacaranda Ave Bradbury 2560
Ph 02 4625 2271, 02 4625 3082 Fax 02 4628 0007
Campbelltown SEG P2 TP1
bradbury-p.school@det.nsw.edu.au

Braddock Public School **(4525)**
Laycock St Cranebrook 2749
Ph 02 4729 0625, 02 4729 0392 Fax 02 4729 1343
Penrith Valley SEG P3 TP2
braddock-p.school@det.nsw.edu.au

Bradfield College **(8599)**
192 Pacific Hwy Crows Nest 2065
Ph 02 9448 4200 Fax 02 9448 4208
North Shore Network SEG S9 TP1
bradfield-h.school@det.nsw.edu.au

Bradfordville Public School **(4406)**
Hampden St Bradfordville 2580
Ph 02 4821 4936 Fax 02 4821 9899
Goulburn/Highlands SEG P4 TP1
bradfordvi-p.school@det.nsw.edu.au

Braidwood Central School **(1340)**
Wilson St Braidwood 2622
Ph 02 4842 2249 Fax 02 4842 2501
Batemans Bay SEG C2 TP2 A C
braidwood-c.school@det.nsw.edu.au

Branxton Public School **(1341)**
King St Branxton 2335
Ph 02 4938 1214 Fax 02 4938 1905
Hunter/Central Coast 8 SEG P3 TP1
branxton-p.school@det.nsw.edu.au

Breadalbane Public School **(1345)**
Collector Rd Breadalbane 2581
Ph 02 4844 2243 Fax 02 4844 2225
Queanbeyan SEG P6 TP1
breadalban-p.school@det.nsw.edu.au

Bredbo Public School **(1347)**
Monaro Hwy Bredbo 2626
(PO Box 865 Bredbo 2626)
Ph 02 6454 4107 Fax 02 6454 4007
Sapphire Coast/Monaro SEG P5 TP2 A C
bredbo-p.school@det.nsw.edu.au

Brewarrina Central School **(1350)**
Bourke St Brewarrina 2839
Ph 02 6839 2186 Fax 02 6839 2325
Bourke SEG C3 TP8 A 6HL
brewarrina-c.school@det.nsw.edu.au

Brewongle Environmental Education Centre **(5694)**
587 Chapel Hill Rde Sackville North 2756
Ph 02 4579 1136 Fax 02 4579 1072
Hawkesbury SEG EEC2 TP1
brewongle-e.school@det.nsw.edu.au

Briar Road Public School **(4458)**
Briar Rd Campbelltown South 2560
Ph 02 4625 5957, 02 4626 1572 Fax 02 4628 0134
Campbelltown SEG P3 TP4
briarrd-p.school@det.nsw.edu.au

Bribbaree Public School **(1354)**
Weedallion St Bribbaree 2594
Ph 02 6383 2308 Fax 02 6383 2248
Riverina North SEG P5 TP4 A 5
bribbaree-p.school@det.nsw.edu.au

Bridge Road School **(5540)**
127 Parramatta Rd Camperdown 2050
Ph 02 9519 8389, 02 9519 8652 Fax 02 9519 6418
Inner City SEG SSP4 TP1
bridgerd-s.school@det.nsw.edu.au

Brighton-Le-Sands Public School **(1358)**
Crawford Rd Rockdale 2216
Ph 02 9567 5449, 02 9567 4982 Fax 02 9556 1660
Georges River SEG P2 TP1
brightonle-p.school@det.nsw.edu.au

Bringelly Public School **(1360)**
Northern Rd Bringelly 2171
Ph 02 4774 8271 Fax 02 4774 9202
Hoxton SEG P5 TP1
bringelly-p.school@det.nsw.edu.au

Brisbane Water Secondary College Umina Campus **(8513)**
Veron Rd Umina 2257
Ph 02 4341 9066 Fax 02 4343 1704
Hunter/Central Coast 3 SEG S8 TP1
umina-h.school@det.nsw.edu.au

Brisbane Water Secondary College Woy Woy Campus **(8374)**
Edward St Woy Woy 2256
Ph 02 4341 1600, 02 4341 4777 Fax 02 4344 3263
Hunter/Central Coast 3 SEG S9 TP1
woywoy-h.school@det.nsw.edu.au

Brisbania Public School **(1498)**
High St Saratoga 2251
Ph 02 4369 1246, 02 4369 3683 Fax 02 4363 1068
Hunter/Central Coast 1 SEG P3 TP1
brisbania-p.school@det.nsw.edu.au

Broadwater Public School **(1361)**
Pacific Hwy Broadwater 2472
Ph 02 6682 8226 Fax 02 6682 8136
Richmond Valley SEG P5 TP1 A 10
broadwater-p.school@det.nsw.edu.au

Brocklesby Public School **(1363)**
Main St Brocklesby 2642
Ph 02 6029 4272 Fax 02 6029 4239
Riverina South SEG P5 TP4 A 8
brocklesby-p.school@det.nsw.edu.au

Broderick Gillawarna School **(5529)**
36-48 Victoria St Revesby 2212
Ph 02 9773 1255 Fax 02 9773 1455
East Hills SEG SSP3 TP1
broderick-s.school@det.nsw.edu.au

Broke Public School **(1367)**
Cochrane St Broke 2330
Ph 02 6579 1040 Fax 02 6579 1242
Hunter/Central Coast 8 SEG P5 TP1
broke-p.school@det.nsw.edu.au

Broken Hill High School **(8105)**
Garnet St Broken Hill 2880
Ph 08 8088 1522 Fax 08 8087 8267
Broken Hill SEG S9 TP6 A HLY
brokenhill-h.school@det.nsw.edu.au

Broken Hill North Public School **(1371)**
Chapple St Broken Hill 2880
Ph 08 8088 2098 Fax 08 8087 2964
Broken Hill SEG P3 TP6 A HLY
brokenhiln-p.school@det.nsw.edu.au

Broken Hill Public School **(1369)**
Mica St Broken Hill 2880
Ph 08 8087 3522 Fax 08 8087 3903
Broken Hill SEG P4 TP6 A HLY
brokenhill-p.school@det.nsw.edu.au

Bronte Public School **(1372)**
Hewlett St Bronte 2024
Ph 02 9389 4527 Fax 02 9369 3001
Network 8 SEG P3 TP1
bronte-p.school@det.nsw.edu.au

Brooke Avenue Public School **(4566)**
Brooke Ave Killarney Vale East 2261
Ph 02 4333 1022 Fax 02 4332 6570
Hunter/Central Coast 1 SEG P3 TP1
brookeave-p.school@det.nsw.edu.au

Brooklyn Public School **(1377)**
106 Brooklyn Rd Brooklyn 2083
Ph 02 9985 7315 Fax 02 9985 7852
Hornsby Network SEG P5 TP1
brooklyn-p.school@det.nsw.edu.au

Brookvale Public School **(1379)**
Old Pittwater Rd Brookvale 2100
Ph 02 9905 4168 Fax 02 9905 7780
Peninsula Network SEG P4 TP1
brookvale-p.school@det.nsw.edu.au

Broulee Public School **(4612)**
Cambridge Cresc Broulee 2537
Ph 02 4471 6120 Fax 02 4471 6145
Batemans Bay SEG P3 TP1
broulee-p.school@det.nsw.edu.au

Brungle Public School **(1387)**
2 Brungle School Rd Brungle 2722
Ph 02 6944 9160 Fax 02 6944 9147
Riverina East SEG P5 TP2 A 9
brungle-p.school@det.nsw.edu.au

Brunswick Heads Public School **(1389)**
Fingal St Brunswick Heads 2483
Ph 02 6685 1204 Fax 02 6685 1312
Southern Cross SEG P4 TP1
brunswickh-p.school@det.nsw.edu.au

Budawang School **(5749)**
Camden & Narrawallee Sts Ulladulla 2539
(PO Box 734 Ulladulla 2539)
Ph 02 4455 1491 Fax 02 4455 4981
Batemans Bay SEG SSP5 TP1
budawang-s.school@det.nsw.edu.au

Budgewoi Public School **(4183)**
Woolana Ave Budgewoi 2262
Ph 02 4390 9166, 02 4390 9554 Fax 02 4399 1958
Hunter/Central Coast 1 SEG P2 TP1
budgewoi-p.school@det.nsw.edu.au

Bulahdelah Central School **(1402)**
8 Meade Street Bulahdelah 2423
Ph 02 4997 4329 Fax 02 4997 4512
Lower North Coast SEG C1 TP1
bulahdelah-c.school@det.nsw.edu.au

Bullarah Public School **(4228)**
Gwydir Highway Moree 2400
Ph 02 6753 3111 Fax 02 6753 3103
New England West SEG P6 TP8 A 2HL
bullarah-p.school@det.nsw.edu.au

Bulli High School **(8878)**
Ursula Rd Bulli 2516
Ph 02 4284 8266 Fax 02 4285 2232
Wollongong North SEG S9 TP1
bulli-h.school@det.nsw.edu.au

Bulli Public School **(1411)**
Haig Rd Bulli 2516
Ph 02 4267 1723 Fax 02 4268 1503
Wollongong North SEG P4 TP1
bulli-p.school@det.nsw.edu.au

Bullimbal School **(5569)**
101 Johnston St Tamworth 2340
Ph 02 6766 4344 Fax 02 6766 2960
New England South SEG SSP5 TP1
bullimbal-s.school@det.nsw.edu.au

Bundanoon Public School **(1414)**
Church St Bundanoon 2578
Ph 02 4883 6192 Fax 02 4883 6799
Goulburn/Highlands SEG P4 TP1
bundanoon-p.school@det.nsw.edu.au

Bundarra Central School **(1415)**
Bowline St Bundarra 2359
Ph 02 6723 7102 Fax 02 6723 7387
New England North SEG C4 TP4 A 6
bundarra-c.school@det.nsw.edu.au

Bundeena Public School **(3765)**
Scarborough St Bundeena 2230
Ph 02 9527 2133 Fax 02 9523 0940
Port Hacking SEG P4 TP1
bundeena-p.school@det.nsw.edu.au

Bungendore Public School **(1421)**
Gibraltar St Bungendore 2621
Ph 02 6238 1317 Fax 02 6238 1718
Queanbeyan SEG P2 TP1 A C
bungendore-p.school@det.nsw.edu.au

Bungwahl Public School **(1424)**
Seal Rocks Rd Bungwahl 2423
Ph 02 4997 6175 Fax 02 4997 6306
Lower North Coast SEG P5 TP1 A 7
bungwahl-p.school@det.nsw.edu.au

Buninyong Public School **(4616)**
Myall St Dubbo 2830
Ph 02 6884 9806 Fax 02 6884 8913
Dubbo SEG P3 TP1
buninyong-p.school@det.nsw.edu.au

Bunnaloo Public School **(1425)**
Fitzroy St Bunnaloo 2731
Ph 03 5489 7275 Fax 03 5489 7228
Riverina South West SEG P5 TP4 A 7L
bunnaloo-p.school@det.nsw.edu.au

Burcher Public School **(1429)**
Bena St Burcher 2671
Ph 02 6972 5223 Fax 02 6972 5233
Riverina North West SEG P6 TP6 A 7HL
burcher-p.school@det.nsw.edu.au

Burke Ward Public School **(1432)**
Rakow St Broken Hill 2880
Ph 08 8088 4700 Fax 08 8087 3712
Broken Hill SEG P3 TP6 A HLY
burkeward-p.school@det.nsw.edu.au

Burnside Public School **(1433)**
1 Masons Drive North Parramatta 2151
Ph 02 9630 1422 Fax 02 9890 1876
Cumberland SEG P4 TP1
burnside-p.school@det.nsw.edu.au

Buronga Public School **(1688)**
Chapman St Buronga 2739
Ph 03 5023 2260 Fax 03 5021 2316
Broken Hill SEG P5 TP6 A HL
buronga-p.school@det.nsw.edu.au

Burraneer Bay Public School **(4259)**
161-165 Burraneer Bay Rd Cronulla 2230
Ph 02 9523 4869, 02 9523 1517 Fax 02 9544 1426
Port Hacking SEG P2 TP1
burraneerb-p.school@det.nsw.edu.au

Burrawang Public School **(1445)**
Church St Burrawang 2577
Ph 02 4886 4261 Fax 02 4886 4248
Goulburn/Highlands SEG P5 TP1
burrawang-p.school@det.nsw.edu.au

Burren Junction Public School **(1447)**
Alma St Burren Junction 2386
Ph 02 6796 1464 Fax 02 6796 1458
New England West SEG P5 TP8 A 5HL
burrenjunc-p.school@det.nsw.edu.au

Burringbar Public School **(1449)**
59 Burringbar Road Burringbar 2483
Ph 02 6677 1469 Fax 02 6677 1616
Far North Coast SEG P5 TP1 A 9
burringbar-p.school@det.nsw.edu.au

Burrumbuttock Public School **(1453)**
Howlong Rd Burrumbuttock 2642
Ph 02 6029 3253 Fax 02 6029 3235
Riverina South SEG P5 TP2 A 8
burrumbutt-p.school@det.nsw.edu.au

Burwood Girls High School **(8152)**
Queen St Croydon 2132
Ph 02 9744 1060, 02 9747 3355 Fax 02 9744 2797
Inner West SEG S8 TP1
burwoodg-h.school@det.nsw.edu.au

Burwood Public School **(1455)**
Conder St Burwood 2134
Ph 02 9745 2299 Fax 02 9744 3613
Strathfield SEG P2 TP1
burwood-p.school@det.nsw.edu.au

Busby Public School **(4337)**
South Liverpool Rd Busby 2168
Ph 02 9607 7211, 02 9607 7066 Fax 02 9608 4934
Liverpool SEG P3 TP4
busby-p.school@det.nsw.edu.au

Busby West Public School **(4396)**
Starling St Green Valley 2168
Ph 02 9607 7573 Fax 02 9608 4936
Hoxton SEG P2 TP4
busbywest-p.school@det.nsw.edu.au

Buxton Public School (1460)
Hassall Rd Buxton 2571
Ph 02 4681 8229 Fax 02 4681 0429
Macarthur SEG P4 TP1
buxton-p.school@det.nsw.edu.au

Byabarra Public School (1461)
1099 Comboyne Rd Byabarra 2446
Ph 02 6587 1135 Fax 02 6587 1147
Hastings SEG P5 TP1 A 8
byabarra-p.school@det.nsw.edu.au

Bylong Upper Public School (1464)
Upper Bylong Rd Bylong 2849
Ph 02 6379 8256 Fax 02 6379 8247
Warrumbungle SEG P6 TP6 A 3
bylonguppr-p.school@det.nsw.edu.au

Byron Bay High School (8577)
Lennox Head Rd Byron Bay 2481
Ph 02 6685 8188 Fax 02 6685 8119
Southern Cross SEG S9 TP1
byronbay-h.school@det.nsw.edu.au

Byron Bay Public School (1470)
17 Kingsley St Byron Bay 2481
Ph 02 6685 6557 Fax 02 6685 8625
Southern Cross SEG P2 TP1
byronbay-p.school@det.nsw.edu.au

Cabbage Tree Island Public School (1471)
Cabbage Tree Island 2477
(PO Box 135 Wardell 2477)
Ph 02 6683 4251 Fax 02 6683 4369
Southern Cross SEG P5 TP2 A 8
cabbagetre-p.school@det.nsw.edu.au

Cabramatta High School (8209)
Aladore Ave Cabramatta 2166
Ph 02 9726 2424 Fax 02 9726 4282
Fairfield SEG S8 TP2
cabramatta-h.school@det.nsw.edu.au

Cabramatta Public School (1472)
Levuka St Cabramatta 2166
Ph 02 9724 1534, 02 9724 2474 Fax 02 9728 2249
Fairfield SEG P1 TP2
cabramatta-p.school@det.nsw.edu.au

Cabramatta West Public School (3980)
Broad St Cabramatta 2166
Ph 02 9724 3332, 02 9724 5377 Fax 02 9727 8636
Fairfield SEG P2 TP2
cabramattw-p.school@det.nsw.edu.au

Cabramurra Public School (3928)
Moolanda Place Cabramurra 2630
Ph 02 6453 8845 Fax 02 6453 8945
Riverina East SEG P6 TP6 A 3C
cabramurra-p.school@det.nsw.edu.au

Caddies Creek Public School (4615)
Currawong St & Glenwood Park Dr Glenwood 2768
Ph 02 8814 5916, 02 8814 5917 Fax 02 8814 5918
The Hills SEG P1 TP1
caddiescrk-p.school@det.nsw.edu.au

Cairnsfoot School (5606)
22 Loftus St Arncliffe 2205
Ph 02 9567 6196 Fax 02 9556 1743
Inner West SEG SSP3 TP1
cairnsfoot-s.school@det.nsw.edu.au

Calare Public School (4380)
Wentworth Lane Orange 2800
(PO Box 2175 Orange 2800)
Ph 02 6362 3699 Fax 02 6362 9702
Orange SEG P1 TP1
calare-p.school@det.nsw.edu.au

Caldera School (5573)
37 Corporation Circuit South Tweed Heads 2486
(PO Box 584 Banora Point 2486)
Ph 07 5524 3244 Fax 07 5524 9536
Far North Coast SEG SSP5 TP1
caldera-s.school@det.nsw.edu.au

Callaghan College Jesmond Campus (8880)
Janet St Jesmond 2299
Ph 02 4952 3922 Fax 02 4956 1241
Hunter/Central Coast 5 SEG S9 TP1
jesmondcc-h.school@det.nsw.edu.au

Callaghan College Wallsend Campus (8259)
Macquarie St Wallsend 2287
Ph 02 4951 1811 Fax 02 4950 1047
Hunter/Central Coast 5 SEG S9 TP1
wallsend-h.school@det.nsw.edu.au

Callaghan College Waratah Technology Campus (8508)
Turton Rd Waratah 2298
Ph 02 4968 1939 Fax 02 4968 4401
Hunter/Central Coast 5 SEG S9 TP1
waratah-h.school@det.nsw.edu.au

Callala Public School (4626)
Emmett St Callala Bay 2540
Ph 02 4446 4352 Fax 02 4446 4357
Shoalhaven SEG P3 TP1
callala-p.school@det.nsw.edu.au

Cambewarra Public School (1481)
Kalinga St Cambewarra 2540
Ph 02 4446 0038 Fax 02 4446 0515
Shoalhaven SEG P4 TP1
cambewarra-p.school@det.nsw.edu.au

Cambridge Gardens Public School (4484)
Trinity Drive Cambridge Park 2747
Ph 02 4730 1201 Fax 02 4729 1385
Penrith Valley SEG P3 TP1
cambridgeg-p.school@det.nsw.edu.au

Cambridge Park High School (8516)
Harrow Rd Cambridge Park 2747
Ph 02 4731 6722, 02 4731 6723 Fax 02 4721 3811
Penrith Valley SEG S9 TP1
cambridge-h.school@det.nsw.edu.au

Cambridge Park Public School (4060)
35 Oxford St Cambridge Park 2747
Ph 02 4721 2556, 02 4721 0601 Fax 02 4721 7567
Penrith Valley SEG P2 TP1
cambridgpk-p.school@det.nsw.edu.au

Camden Haven High School (8280)
Valley View Rd Laurieton 2443
Ph 02 6556 8100 Fax 02 6556 8105
Manning Camden Haven SEG S8 TP1
camdenhave-h.school@det.nsw.edu.au

Camden High School (8217)
300 Cawdor Rd Camden 2570
Ph 02 4655 9191 Fax 02 4655 2438
Macarthur SEG S8 TP1
camden-h.school@det.nsw.edu.au

Camden Park Environmental Education Centre (5429)
Finns Rd & Remembrance Drive Menangle 2568
(PO Box 684 Camden 2570)
Ph 02 4636 6313 Fax 02 4636 6342
Macarthur SEG EEC1 TP1
camdenpk-e.school@det.nsw.edu.au

Camden Public School (1482)
John St Camden 2570
Ph 02 4655 8049, 02 4655 8186 Fax 02 4655 3269
Macarthur SEG P3 TP1
camden-p.school@det.nsw.edu.au

Camden South Public School (4286)
Hume Hwy Camden 2570
Ph 02 4655 2633, 02 4655 2650 Fax 02 4655 3267
Macarthur SEG P2 TP1
camdensth-p.school@det.nsw.edu.au

Camdenville Public School (1483)
Laura St Newtown 2042
Ph 02 9557 5505, 02 9519 4402 Fax 02 9550 4605
Inner City SEG P4 TP1
camdenvill-p.school@det.nsw.edu.au

Cameron Park School (5701)
Christo Rd Waratah 2298
Ph 02 4960 2122 Fax 02 4967 5920
Hunter/Central Coast 5 SEG SSP4 TP1
cameronpk-s.school@det.nsw.edu.au

Cammeray Public School (1485)
Palmer St Cammeray 2062
Ph 02 9955 7200 Fax 02 9957 4693
Middle Harbour Network SEG P2 TP1
cammeray-p.school@det.nsw.edu.au

Campbell House School (5735)
Roy Watts Rd Glenfield 2167
Ph 02 9618 2770 Fax 02 9829 3972
Liverpool SEG SSP4 TP2
campbellho-s.School@det.nsw.edu.au

Campbellfield Public School (4490)
Townson Ave Minto 2566
Ph 02 9603 4233 Fax 02 9820 2945
Ingleburn SEG P3 TP2
campbellfi-p.school@det.nsw.edu.au

Campbelltown East Public School (4277)
Waminda Ave Campbelltown 2560
Ph 02 4626 2022, 02 4625 3080 Fax 02 4628 1727
Campbelltown SEG P3 TP2
campbellte-p.school@det.nsw.edu.au

Campbelltown High School (8180)
Beverley Rd Campbelltown 2560
Ph 02 4625 1403, 02 4625 2454 Fax 02 4625 5986
Campbelltown SEG S8 TP2
campbellto-h.school@det.nsw.edu.au

Campbelltown North Public School (4126)
Thomas St & Rudd Rd Campbelltown 2560
Ph 02 4625 1788, 02 4625 1954 Fax 02 4627 1278
Campbelltown SEG P3 TP2
campbelltn-p.school@det.nsw.edu.au

Campbelltown Public School (1486)
Lithgow St Campbelltown 2560
Ph 02 4625 1581, 02 4625 1633 Fax 02 4628 5031
Campbelltown SEG P4 TP2
campbellto-p.school@det.nsw.edu.au

Campsie Public School (1488)
Evaline St Campsie 2194
Ph 02 9718 3083, 02 9718 3867 Fax 02 9718 8007
Strathfield SEG P2 TP1
campsie-p.school@det.nsw.edu.au

Candelo Public School (1490)
William St Candelo 2550
Ph 02 6493 2236 Fax 02 6493 2035
Sapphire Coast/Monaro SEG P5 TP2 A 10
candelo-p.school@det.nsw.edu.au

Caniaba Public School (1492)
Caniaba Rd Lismore 2480
Ph 02 6621 4309 Fax 02 6622 0260
The Wilson SEG P5 TP1 A 10
caniaba-p.school@det.nsw.edu.au

Canley Heights Public School (3983)
Cambridge St Canley Heights 2166
(PO Box 103 Canley Heights 2166)
Ph 02 9724 3320, 02 9724 3102 Fax 02 9727 2402
Fairfield SEG P2 TP2
canleyhts-p.school@det.nsw.edu.au

Canley Vale High School **(8393)**
Prospect Rd Canley Vale 2166
Ph 02 9728 7071, 02 9727 6696 Fax 02 9754 1274
Fairfield SEG S9 TP2
canleyvale-h.school@det.nsw.edu.au

Canley Vale Public School **(1494)**
Canley Vale Rd Canley Vale 2166
Ph 02 9724 1555, 02 9724 1315 Fax 02 9728 1792
Fairfield SEG P1 TP2
canleyvale-p.school@det.nsw.edu.au

Canobolas Public School **(1495)**
Canobolas Rd Orange 2800
Ph 02 6365 3282 Fax 02 6365 3146
Orange SEG P5 TP1
canobolas-p.school@det.nsw.edu.au

Canobolas Rural Technology High School **(8444)**
Icely Rd Orange 2800
(PO Box 8100 East Orange 2800)
Ph 02 6362 1677, 02 6362 1737 Fax 02 6362 4481
Orange SEG S9 TP1
canobolas-h.school@det.nsw.edu.au

Canowindra High School **(8518)**
Browns Ave Canowindra 2804
Ph 02 6344 1305 Fax 02 6344 1085
Lachlan SEG S9 TP2
canowindra-h.school@det.nsw.edu.au

Canowindra Public School **(7301)**
Tilga St Canowindra 2804
Ph 02 6344 1403 Fax 02 6344 1462
Lachlan SEG P4 TP2
canowindra-p.school@det.nsw.edu.au

Canterbury Boys High School **(8107)**
Holden St Canterbury 2193
Ph 02 9798 8444, 02 9798 8866 Fax 02 9716 7603
Inner West SEG S9 TP1
canterburb-h.school@det.nsw.edu.au

Canterbury Girls High School **(8806)**
Church St Canterbury 2193
Ph 02 9718 1805 Fax 02 9718 3501
Inner West SEG S9 TP1
canterburg-h.school@det.nsw.edu.au

Canterbury Public School **(1497)**
Church St Canterbury 2193
Ph 02 9718 2884, 02 9718 4537 Fax 02 9718 0725
Inner West SEG P4 TP1
canterbury-p.school@det.nsw.edu.au

Canterbury South Public School **(5109)**
High St Canterbury 2193
Ph 02 9789 5255 Fax 02 9718 8006
Inner West SEG P4 TP1
canterburs-p.school@det.nsw.edu.au

Canterbury Vale School **(5759)**
24 Wangee Rd Lakemba 2195
Ph 02 9750 0072 Fax 02 9750 0051
Strathfield SEG SSP5 TP0
cantervale-s.school@det.nsw.edu.au

Capertee Public School **(1501)**
Castlereagh Hwy Capertee 2846
Ph 02 6359 0175 Fax 02 6359 0115
Bathurst SEG P6 TP2
capertee-p.school@det.nsw.edu.au

Captains Flat Public School **(1502)**
Montgomery St Captains Flat 2623
Ph 02 6236 6253 Fax 02 6236 6390
Queanbeyan SEG P5 TP2 A C
captainsfl-p.school@det.nsw.edu.au

Caragabal Public School **(1503)**
Marsden & Wheoga Sts Caragabal 2810
Ph 02 6347 5225 Fax 02 6347 5214
Lachlan SEG P6 TP4 A 6
caragabal-p.school@det.nsw.edu.au

Carcoar Public School **(1504)**
Icely St Carcoar 2791
Ph 02 6367 3032 Fax 02 6367 3062
Orange SEG P6 TP2 A 10
carcoar-p.school@det.nsw.edu.au

Cardiff High School **(8903)**
Boronia St Cardiff 2285
Ph 02 4954 9966 Fax 02 4956 6413
Hunter/Central Coast 4 SEG S9 TP1
cardiff-h.school@det.nsw.edu.au

Cardiff North Public School **(5260)**
Wansbeck Valley Rd Cardiff 2285
Ph 02 4954 0404 Fax 02 4956 5530
Hunter/Central Coast 4 SEG P4 TP1
cardiffnth-p.school@det.nsw.edu.au

Cardiff Public School **(1505)**
Macquarie Rd Cardiff 2285
Ph 02 4954 0475 Fax 02 4956 5436
Hunter/Central Coast 4 SEG P4 TP1
cardiff-p.school@det.nsw.edu.au

Cardiff South Public School **(3895)**
Lake Ave Cardiff South 2285
Ph 02 4954 7296, 02 4954 8975 Fax 02 4956 5730
Hunter/Central Coast 4 SEG P3 TP1
cardiffsth-p.school@det.nsw.edu.au

Carenne School **(5610)**
158 Browning St Bathurst 2795
Ph 02 6331 1753 Fax 02 6332 3041
Bathurst SEG SSP4 TP1 A C
carenne-s.school@det.nsw.edu.au

Cargo Public School **(1506)**
Hutton St Cargo 2800
Ph 02 6364 3093 Fax 02 6364 3092
Lachlan SEG P6 TP2 A 7
cargo-p.school@det.nsw.edu.au

Carinda Public School **(1507)**
Macnamara St Carinda 2831
Ph 02 6823 2235 Fax 02 6823 2208
Warrumbungle SEG P6 TP8 A 3HL
carinda-p.school@det.nsw.edu.au

Caringbah High School **(8240)**
111-129 Willarong Rd Caringbah 2229
(PO Box 328 Caringbah 1495)
Ph 02 9524 3859, 02 9524 2340 Fax 02 9525 6723
Port Hacking SEG S8 TP1
caringbah-h.school@det.nsw.edu.au

Caringbah North Public School **(3972)**
125 Cawarra Rd Caringbah 2229
Ph 02 9524 6098, 02 9524 5500 Fax 02 9540 2826
Port Hacking SEG P2 TP1
caringbahn-p.school@det.nsw.edu.au

Caringbah Public School **(1508)**
Port Hacking Rd Caringbah 2229
Ph 02 9524 7217, 02 9524 3430 Fax 02 9540 3655
Port Hacking SEG P4 TP1
caringbah-p.school@det.nsw.edu.au

Carinya School **(5703)**
Colebourne Ave Mortdale 2223
Ph 02 9580 2852, 02 9580 6579 Fax 02 9580 7054
Georges River SEG SSP4 TP1
carinya-s.school@det.nsw.edu.au

Carlingford High School **(8447)**
North Rocks Rd Carlingford 2118
Ph 02 9871 4222, 02 9871 4011 Fax 02 9873 1145
Hills Network SEG S8 TP1
carlingfor-h.school@det.nsw.edu.au

Carlingford Public School **(7302)**
Rickard St Carlingford 2118
Ph 02 9871 6983, 02 9871 5135 Fax 02 9871 3898
Cumberland SEG P3 TP1
carlingfor-p.school@det.nsw.edu.au

Carlingford West Public School **(4393)**
Felton Rd Carlingford 2118
Ph 02 9871 7187, 02 9871 6440 Fax 02 9872 2081
Cumberland SEG P2 TP1
carlingfow-p.school@det.nsw.edu.au

Carlton Public School **(1512)**
60 Cameron St Bexley 2207
Ph 02 9587 3717, 02 9587 3162 Fax 02 9553 8307
Network 8 SEG P1 TP1
carlton-p.school@det.nsw.edu.au

Carlton South Public School **(1513)**
Jubilee Ave Carlton 2218
Ph 02 9587 5235, 02 9587 5777 Fax 02 9553 8308
Georges River SEG P2 TP1
carltonsth-p.school@det.nsw.edu.au

Caroline Chisholm School **(5652)**
Napoli St Padstow 2211
Ph 02 9709 4661 Fax 02 9790 0951
East Hills SEG SSP4 TP1
carolchish-s.school@det.nsw.edu.au

Carool Public School **(1515)**
Carool Rd Carool 2486
Ph 07 5590 9876 Fax 07 5590 7207
Far North Coast SEG P5 TP1 A 10
carool-p.school@det.nsw.edu.au

Carramar Public School **(3328)**
The Horsley Drive Carramar 2163
Ph 02 9724 1850, 02 9724 2553 Fax 02 9724 1660
Fairfield SEG P4 TP1
carramar-p.school@det.nsw.edu.au

Carrathool Public School **(1517)**
Glover St Carrathool 2711
Ph 02 6993 5143 Fax 02 6993 5002
Riverina West SEG P6 TP8 A 4
carrathool-p.school@det.nsw.edu.au

Carrington Public School **(1518)**
Young St Carrington 2294
Ph 02 4969 3707 Fax 02 4961 6860
Hunter/Central Coast 4 SEG P5 TP1
carrington-p.school@det.nsw.edu.au

Carroll Public School **(1520)**
David St Carroll 2340
(PO Box 357 Gunnedah 2380)
Ph 02 6743 1722 Fax 02 6743 1800
New England South SEG P6 TP2 A 8
carroll-p.school@det.nsw.edu.au

Cartwright Public School **(4360)**
Willan Drive Cartwright 2168
(PO Box 5331 Prestons 2170)
Ph 02 9607 7979, 02 9607 9589 Fax 02 9608 3237
Liverpool SEG P4 TP2
cartwright-p.school@det.nsw.edu.au

Cascade Environmental Education Centre **(5731)**
Coramba Rd Cascade via Dorrigo 2453
(PO Box 206 Dorrigo 2453)
Ph 02 6657 4188 Fax 02 6657 4117
Mid North Coast SEG EEC1 TP1 A 10
cascade-e.school@det.nsw.edu.au

Casino High School **(8154)**
Queensland Rd Casino 2470
Ph 02 6662 3077, 02 6662 3126 Fax 02 6662 6390
Richmond Valley SEG S9 TP1
casino-h.school@det.nsw.edu.au

Casino Public School (1526)
31 Walker St Casino 2470
Ph 02 6662 1113 Fax 02 6662 2230
Richmond Valley SEG P2 TP1
casino-p.school@det.nsw.edu.au

Casino West Public School (5166)
Hotham St Casino 2470
Ph 02 6662 1916, 02 6662 3294 Fax 02 6662 6373
Richmond Valley SEG P3 TP1
casinowest-p.school@det.nsw.edu.au

Cassilis Public School (1527)
Coolah Rd Cassilis 2329
Ph 02 6376 1009 Fax 02 6376 1005
Hunter/Central Coast 8 SEG P6 TP4 A 5
cassilis-p.school@det.nsw.edu.au

Castle Cove Public School (3919)
Kendall Rd Castle Cove 2069
Ph 02 9417 1039, 02 9417 2832 Fax 02 9417 4377
North Shore Network SEG P3 TP1
castlecove-p.school@det.nsw.edu.au

Castle Hill High School (8382)
Castle St Castle Hill 2154
Ph 02 9634 4199, 02 9634 4342 Fax 02 9899 6527
Hills Network SEG S8 TP1
castlehill-h.school@det.nsw.edu.au

Castle Hill Public School (1529)
Les Shore Place Castle Hill 2154
Ph 02 9634 3777 Fax 02 9899 6845
Hills Network SEG P1 TP1
castlehill-p.school@det.nsw.edu.au

Castlereagh Public School (4148)
Post Office Rd Castlereagh 2750
Ph 02 4776 1197 Fax 02 4776 1535
Hawkesbury SEG P5 TP1
castlereag-p.school@det.nsw.edu.au

Casuarina School (5574)
Garfield Rd East & Piccadilly St Riverstone 2765
(PO Box 60 Riverstone 2765)
Ph 02 9627 5590, 02 9838 1200 Fax 02 9627 4773
Nirimba SEG SSP5 TP1
casuarina-s.school@det.nsw.edu.au

Casula High School (8476)
Myall Rd Casula 2170
(PO Box 53 Glenfield 2167)
Ph 02 9602 4320, 02 9602 4270 Fax 02 9601 4175
Liverpool SEG S9 TP2
casula-h.school@det.nsw.edu.au

Casula Public School (4198)
De Meyrick Ave Casula 2170
(PO Box 212 Casula Mall 2170)
Ph 02 9602 3170, 02 9602 6903 Fax 02 9821 1020
Liverpool SEG P2 TP2
casula-p.school@det.nsw.edu.au

Cattai Public School (1535)
487 Cattai Rd Cattai 2756
Ph 02 4572 8445 Fax 02 4572 8760
Hawkesbury SEG P5 TP1
cattai-p.school@det.nsw.edu.au

Caves Beach Public School (4367)
Park Ave Caves Beach 2281
Ph 02 4971 1838, 02 4971 2369 Fax 02 4972 1346
Hunter/Central Coast 7 SEG P3 TP1
cavesbeach-p.school@det.nsw.edu.au

Cawdor Public School (1537)
865 Cawdor Rd Camden 2570
Ph 02 4636 6133 Fax 02 4636 6365
Macarthur SEG P5 TP1
cawdor-p.school@det.nsw.edu.au

Cecil Hills High School (8273)
Spencer Rd Cecil Hills 2171
Ph 02 9822 1430 Fax 02 9822 1436
Hoxton SEG S8 TP1
cecilhills-h.school@det.nsw.edu.au

Cecil Hills Public School (4635)
Leopold Place Cecil Hills 2171
Ph 02 9822 0504, 02 9822 0752 Fax 02 9822 0873
Hoxton SEG P2 TP1
cecilhills-p.school@det.nsw.edu.au

Centaur Public School (4607)
Eucalyptus Drive Banora Point 2486
(PO Box 63 Banora Point 2486)
Ph 07 5524 9655 Fax 07 5524 7052
Far North Coast SEG P2 TP1
centaur-p.school@det.nsw.edu.au

Centennial Park School (5516)
Level 1/78 Avoca Street Randwick 2031
(PO Box 21 St Pauls 2031)
Ph 02 9310 0588 Fax 02 9310 0480
Inner City SEG SSP5 TP1
centennial-s.school@det.nsw.edu.au

Central Mangrove Public School (4110)
1708 Wisemans Ferry Rd Central Mangrove 2250
Ph 02 4373 1156 Fax 02 4373 1051
Hunter/Central Coast 3 SEG P5 TP1
centmangro-p.school@det.nsw.edu.au

Central Tilba Public School (3214)
89 Corkhill Drive Central Tilba 2546
Ph 02 4473 7210 Fax 02 4473 7469
Batemans Bay SEG P5 TP1 A 10
centrtilba-p.school@det.nsw.edu.au

Cessnock East Public School (1543)
Old Maitland Rd Cessnock 2325
Ph 02 4990 1549 Fax 02 4991 1552
Hunter/Central Coast 9 SEG P4 TP1
cessnocke-p.school@det.nsw.edu.au

Cessnock High School (8108)
Aberdare St Cessnock 2325
Ph 02 4990 1439 Fax 02 4991 1815
Hunter/Central Coast 9 SEG S9 TP1
cessnock-h.school@det.nsw.edu.au

Cessnock Public School (1542)
Rawson St Cessnock 2325
Ph 02 4990 1652, 02 4990 1604 Fax 02 4991 1782
Hunter/Central Coast 9 SEG P3 TP1
cessnock-p.school@det.nsw.edu.au

Cessnock West Public School (1545)
Wollombi & Campbell Sts Cessnock 2325
Ph 02 4990 1637, 02 4990 2684 Fax 02 4991 1523
Hunter/Central Coast 9 SEG P3 TP1
cessnockw-p.school@det.nsw.edu.au

Chalmers Road School (3831)
Chalmers Rd Strathfield 2135
Ph 02 9746 6202 Fax 02 9764 1996
Strathfield SEG SSP4 TP1
chalmersrd-s.school@det.nsw.edu.au

Chandler Public School (1547)
Armidale-Grafton Rd Wollomombi 2350
Ph 02 6778 1335 Fax 02 6778 1240
New England North SEG P6 TP4 A 5
chandler-p.school@det.nsw.edu.au

Channon Public School, The (1548)
Standing St The Channon 2480
Ph 02 6688 6236 Fax 02 6688 6273
The Wilson SEG P5 TP1 A 9
thechannon-p.school@det.nsw.edu.au

Charlestown East Public School (4194)
James St Charlestown 2290
Ph 02 4943 5173, 02 4943 1990 Fax 02 4942 2575
Hunter/Central Coast 7 SEG P4 TP1
charlestoe-p.school@det.nsw.edu.au

Charlestown Public School (1550)
Frederick St Charlestown 2290
Ph 02 4943 4063, 02 4943 4137 Fax 02 4942 2583
Hunter/Central Coast 7 SEG P4 TP1
charlestow-p.school@det.nsw.edu.au

Charlestown South Public School (4324)
Patricia Ave Charlestown 2290
Ph 02 4943 5827 Fax 02 4942 2578
Hunter/Central Coast 7 SEG P4 TP1
charlestos-p.school@det.nsw.edu.au

Chatham High School (8414)
St Vincents & Davis Sts Taree 2430
Ph 02 6552 2588, 02 6552 2702 Fax 02 6551 2005
Manning Camden Haven SEG S8 TP1
chatham-h.school@det.nsw.edu.au

Chatham Public School (4014)
Chatham Ave Taree 2430
Ph 02 6551 1081 Fax 02 6551 2012
Manning Camden Haven SEG P3 TP1
chatham-p.school@det.nsw.edu.au

Chatswood High School (8232)
24 Centennial Ave Chatswood 2067
Ph 02 9419 3611, 02 9419 3857 Fax 02 9415 1342
North Shore Network SEG S9 TP1
chatswood-h.school@det.nsw.edu.au

Chatswood Public School (7409)
5 Centennial Ave Chatswood 2067
Ph 02 9419 6127, 02 9419 5795 Fax 02 9415 1241
North Shore Network SEG P2 TP1
chatswood-p.school@det.nsw.edu.au

Chatsworth Island Public School (1553)
Chatsworth Island Rd Chatsworth Island 2469
Ph 02 6646 4346 Fax 02 6646 4160
Clarence SEG P5 TP1 A 10
chatsworth-p.school@det.nsw.edu.au

Cheltenham Girls High School (8208)
Beecroft Rd & The Promenade Beecroft 2119
Ph 02 9876 4481, 02 9876 6147 Fax 02 9869 8521
Hills Network SEG S8 TP1
cheltenham-h.school@det.nsw.edu.au

Cherrybrook Public School (4440)
131 New Line Rd Cherrybrook 2126
Ph 02 9481 8575 Fax 02 9980 7235
Hills Network SEG P2 TP1
cherrybrok-p.school@det.nsw.edu.au

Cherrybrook Technology High School (8592)
28-44 Purchase Rd Cherrybrook 2126
Ph 02 9484 2144 Fax 02 9875 4537
Hills Network SEG S8 TP1
cherrybrok-h.school@det.nsw.edu.au

Chertsey Primary School (4398)
Willow Rd Springfield 2250
Ph 02 4325 3963 Fax 02 4323 6891
Hunter/Central Coast 1 SEG P4 TP1
chertsey-p.school@det.nsw.edu.au

Chester Hill High School (8269)
Kenward Ave Chester Hill 2162
Ph 02 9644 1099, 02 9644 5740 Fax 02 9743 7174
Fairfield SEG S8 TP1
chesterhil-h.school@det.nsw.edu.au

Chester Hill North Public School (3981)
Campbell Hill Rd Chester Hill 2162
Ph 02 9644 1512, 02 9644 4825 Fax 02 9743 7176
Fairfield SEG P2 TP1
chesterhin-p.school@det.nsw.edu.au

Chester Hill Public School **(3698)**
Proctor Pde Chester Hill 2162
Ph 02 9644 1286, 02 9644 1251 Fax 02 9743 8094
Fairfield SEG P2 TP1
chesterhil-p.school@det.nsw.edu.au

Chifley College Bidwill Campus **(8528)**
Bunya Rd Bidwill 2770
Ph 02 9628 2222 Fax 02 9628 0359
Mt Druitt SEG S9 TP4
bidwill-h.school@det.nsw.edu.au

Chifley College Dunheved Campus **(8488)**
Maple Rd St Marys North 2760
Ph 02 9623 6600 Fax 02 9833 1265
Mt Druitt SEG S9 TP4
dunheved-h.school@det.nsw.edu.au

Chifley College Mount Druitt Campus **(8459)**
Stuart St Mount Druitt 2770
Ph 02 9625 9750, 02 9625 7318 Fax 02 9832 1463
Mt Druitt SEG S9 TP4
mtdruitt-h.school@det.nsw.edu.au

Chifley College Senior Campus **(8473)**
North Pde Mount Druitt 2770
Ph 02 9625 9920, 02 9625 9940 Fax 02 9832 2413
Mt Druitt SEG S9 TP4
chifcolsnr-h.school@det.nsw.edu.au

Chifley College Shalvey Campus **(8496)**
Noumea St Shalvey 2770
Ph 02 9628 9161, 02 9628 9447 Fax 02 9628 1506
Mt Druitt SEG S9 TP4
shalvey-h.school@det.nsw.edu.au

Chifley Public School **(4299)**
Mitchell St Malabar 2036
Ph 02 9661 3014, 02 9661 3718 Fax 02 9661 6934
Botany Bay SEG P4 TP1
chifley-p.school@det.nsw.edu.au

Childrens Hospital School, The **(5751)**
Hawkesbury Rd & Hainsworth St Westmead 2145
Ph 02 9845 2813 Fax 02 9845 2837
Cumberland SEG SSP4 TP1
childhosp-s.school@det.nsw.edu.au

Chillingham Public School **(1558)**
1420 Numinbah Rd Chillingham 2484
Ph 02 6679 1255 Fax 02 6679 1207
Far North Coast SEG P5 TP1 A 10
chillingha-p.school@det.nsw.edu.au

Chipping Norton Public School **(1560)**
Central Ave Chipping Norton 2170
Ph 02 9724 1565 Fax 02 9755 1324
East Hills SEG P4 TP1
chippingno-p.school@det.nsw.edu.au

Chittaway Bay Public School **(4542)**
Chittaway Rd Chittaway Bay 2259
Ph 02 4388 2188 Fax 02 4389 1905
Hunter/Central Coast 1 SEG P3 TP1
chittaway-p.school@det.nsw.edu.au

Chullora Public School **(3808)**
Norfolk & Waterloo Rds Greenacre 2190
Ph 02 9642 4266, 02 9642 3025 Fax 02 9742 5943
Bankstown SEG P3 TP1
chullora-p.school@det.nsw.edu.au

Clairgate Public School **(4527)**
Colorado Drive St Clair 2759
Ph 02 9670 1408, 02 9670 1409 Fax 02 9834 3869
Minchinbury SEG P2 TP2
clairgate-p.school@det.nsw.edu.au

Clare Public School **(4565)**
Booligal Rd Clare via Balranald 2715
Ph 03 5020 6896 Fax 03 5020 6890
Riverina South West SEG P6 TP8 A 1HL
clare-p.school@det.nsw.edu.au

Claremont Meadows Public School **(4622)**
Sunflower Drive Claremont Meadows 2747
Ph 02 9833 0711 Fax 02 9833 0755
Penrith Valley SEG P2 TP1
claremontm-p.school@det.nsw.edu.au

Clarence Town Public School **(1564)**
Queen St Clarence Town 2321
Ph 02 4996 4156 Fax 02 4996 4392
Hunter/Central Coast 10 SEG P4 TP1
clarenceto-p.school@det.nsw.edu.au

Clarke Road School **(5655)**
Clarke Rd Hornsby South 2077
Ph 02 9487 2652 Fax 02 9489 2997
Hornsby Network SEG SSP4 TP1
clarkerd-s.school@det.nsw.edu.au

Claymore Public School **(4510)**
Dobell Rd Claymore 2559
Ph 02 4626 3988 Fax 02 4628 5033
Campbelltown SEG P3 TP4
claymore-p.school@det.nsw.edu.au

Clemton Park Public School **(1566)**
185 Bexley Rd Earlwood 2206
Ph 02 9718 4483, 02 9718 5998 Fax 02 9718 8703
Network 8 SEG P2 TP1
clemtonpk-p.school@det.nsw.edu.au

Clergate Public School **(2668)**
Clergate Lane Clergate 2800
Ph 02 6365 8256 Fax 02 6365 8334
Orange SEG P5 TP1 A 9
clergate-p.school@det.nsw.edu.au

Cleveland Street Intensive English High School (8288)
Cnr Chalmers & Cleveland Sts Surry Hills 2010
(PO Box 337 Strawberry Hills 2012)
Ph 02 9319 4807, 02 9319 4806 Fax 02 9698 5691
Network 8 SEG S9 TP1
clevelandi-h.school@det.nsw.edu.au

Clovelly Public School (1573)
Arden St Waverley 2024
Ph 02 9665 6710, 02 9665 6757 Fax 02 9664 2613
Botany Bay SEG P2 TP1
clovelly-p.school@det.nsw.edu.au

Clunes Public School (1574)
Walker St Clunes 2480
Ph 02 6629 1278 Fax 02 6629 1040
The Wilson SEG P5 TP1 A 9
clunes-p.school@det.nsw.edu.au

Coal Point Public School (4022)
Coal Point Rd Coal Point 2283
Ph 02 4959 1374 Fax 02 4950 4914
Hunter/Central Coast 6 SEG P4 TP1
coalpoint-p.school@det.nsw.edu.au

Cobar High School (8356)
Wetherell Cres Cobar 2835
Ph 02 6836 2705, 02 6836 2305 Fax 02 6836 1142
Bourke SEG S9 TP6 A 10HL
cobar-h.school@det.nsw.edu.au

Cobar Public School (1578)
6-8 Blakey St Cobar 2835
Ph 02 6836 2039 Fax 02 6836 2187
Bourke SEG P3 TP6 A 10HL
cobar-p.school@det.nsw.edu.au

Cobargo Public School (1579)
Wandella Rd Cobargo 2550
(PO Box 63 Cobargo 2550)
Ph 02 6493 6482 Fax 02 6493 6410
Sapphire Coast/Monaro SEG P5 TP1
cobargo-p.school@det.nsw.edu.au

Cobbitty Public School (1580)
Cobbitty Rd Cobbitty 2570
Ph 02 4651 2262 Fax 02 4651 2686
Macarthur SEG P4 TP1
cobbitty-p.school@det.nsw.edu.au

Coffee Camp Public School (1583)
Nimbin Rd Coffee Camp 2480
Ph 02 6689 9259 Fax 02 6689 9363
The Wilson SEG P5 TP1 A 9
coffeecamp-p.school@det.nsw.edu.au

Coffs Harbour High School (8109)
High St Coffs Harbour Jetty 2450
Ph 02 6652 3466 Fax 02 6651 4004
Coffs Harbour SEG S8 TP1
coffsharb-h.school@det.nsw.edu.au

Coffs Harbour Learning Centre (5763)
Linden Ave Boambee 2450
Ph 02 6653 1855 Fax 02 6653 2638
Coffs Harbour SEG SSP5 TP1
coffshbrlc-s.school@det.nsw.edu.au

Coffs Harbour Public School (1584)
Salamander St Coffs Harbour 2450
Ph 02 6652 3355 Fax 02 6651 3991
Coffs Harbour SEG P3 TP1
coffsharb-p.school@det.nsw.edu.au

Coffs Harbour Senior College (8272)
Hogbin Drive Coffs Harbour 2457
Ph 02 6659 3000 Fax 02 6659 3009
Coffs Harbour SEG S9 TP1
coffsharbs-h.school@det.nsw.edu.au

Coleambally Central School (4348)
Kingfisher Ave Coleambally 2707
Ph 02 6954 4131 Fax 02 6954 4396
Riverina West SEG C3 TP4 A 10H
coleamball-c.school@det.nsw.edu.au

Coledale Public School (1587)
Lawrence Hargrave Drive Coledale 2515
Ph 02 4267 1885 Fax 02 4268 1438
Wollongong North SEG P5 TP1
coledale-p.school@det.nsw.edu.au

Collarenebri Central School (1589)
High St Collarenebri 2833
Ph 02 6756 2204 Fax 02 6756 2260
New England West SEG C4 TP8 A 4HL
collareneb-c.school@det.nsw.edu.au

Collaroy Plateau Public School (3970)
Plateau Rd Collaroy Plateau 2097
Ph 02 9971 5214 Fax 02 9971 4801
Peninsula Network SEG P3 TP1
collaroypl-p.school@det.nsw.edu.au

Collector Public School (1590)
Lorn St Collector 2581
Ph 02 4848 0024 Fax 02 4848 0102
Queanbeyan SEG P6 TP1 A C
collector-p.school@det.nsw.edu.au

Collingullie Public School (1591)
Urana St Collingullie 2652
Ph 02 6920 0165 Fax 02 6920 0288
Riverina Central SEG P5 TP2 A 9
collingull-p.school@det.nsw.edu.au

Collins Creek Public School (1593)
480 Collins Valley Road Collins Creek 2474
Ph 02 6633 1278 Fax 02 6633 1331
Richmond Valley SEG P6 TP1 A 8
collinsck-p.school@det.nsw.edu.au

Colo Heights Public School **(1346)**
Singleton Rd Colo Heights 2756
Ph 02 4565 0202 Fax 02 4565 0160
Hawkesbury SEG P5 TP1
colohts-p.school@det.nsw.edu.au

Colo High School **(8526)**
218 Bells Line of Road Richmond North 2754
Ph 02 4571 2011 Fax 02 4571 3391
Hawkesbury SEG S8 TP1
colo-h.school@det.nsw.edu.au

Colo Vale Public School **(1085)**
Wattle St Colo Vale 2575
Ph 02 4889 4250 Fax 02 4889 4285
Goulburn/Highlands SEG P4 TP1
colovale-p.school@det.nsw.edu.au

Colyton High School **(8443)**
37-53 Carpenter St St Marys 2760
Ph 02 9623 2789, 02 9623 3171 Fax 02 9833 1165
Minchinbury SEG S9 TP2
colyton-h.school@det.nsw.edu.au

Colyton Public School **(1596)**
Nelson St Mount Druitt 2770
Ph 02 9625 8185, 02 9625 8023 Fax 02 9832 2403
Minchinbury SEG P2 TP2
colyton-p.school@det.nsw.edu.au

Comboyne Public School **(1601)**
Hill St Comboyne 2429
Ph 02 6550 4174 Fax 02 6550 4002
Hastings SEG P5 TP1 A 8
comboyne-p.school@det.nsw.edu.au

Comleroy Road Public School **(1604)**
McMahons Rd Kurrajong 2758
Ph 02 4576 1600 Fax 02 4576 1620
Hawkesbury SEG P4 TP1
comleroyrd-p.school@det.nsw.edu.au

Como Public School **(1605)**
Genoa St Como 2226
Ph 02 9528 9003 Fax 02 9528 3407
Woronora River SEG P5 TP1
como-p.school@det.nsw.edu.au

Como West Public School **(3896)**
Wolger & Warraba Sts Como 2226
Ph 02 9528 9007, 02 9528 8048 Fax 02 9528 3482
Woronora River SEG P3 TP1
comowest-p.school@det.nsw.edu.au

Conargo Public School **(1606)**
Deniliquin-Wagga Wagga Rd Conargo 2710
Ph 03 5884 6624 Fax 03 5884 6736
Riverina South West SEG P5 TP4 A 6HL
conargo-p.school@det.nsw.edu.au

Concord High School **(8535)**
Stanley St Concord 2137
Ph 02 9745 3777 Fax 02 9744 2683
Strathfield SEG S9 TP1
concord-h.school@det.nsw.edu.au

Concord Public School **(1607)**
Burwood Rd Concord 2137
(PO Box 522 Concord 2137)
Ph 02 9744 8427, 02 9744 8452 Fax 02 9744 5187
Strathfield SEG P4 TP1
concord-p.school@det.nsw.edu.au

Concord West Public School **(1608)**
Concord Rd Concord West 2138
Ph 02 9743 1580 Fax 02 9743 6606
Strathfield SEG P4 TP1
concordw-p.school@det.nsw.edu.au

Condell Park High School **(8398)**
Third Ave Condell Park 2200
Ph 02 9709 4522, 02 9709 4169 Fax 02 9796 8027
Bankstown SEG S9 TP1
condellpk-h.school@det.nsw.edu.au

Condell Park Public School **(3789)**
Augusta St Bankstown 2200
Ph 02 9796 7998 Fax 02 9790 0973
Bankstown SEG P3 TP1
condellpk-p.school@det.nsw.edu.au

Condobolin High School **(8346)**
Innes St Condobolin 2877
(PO Box 237 Condobolin 2877)
Ph 02 6895 2333 Fax 02 6895 3501
Lachlan SEG S9 TP4 A HL
condobolin-h.school@det.nsw.edu.au

Condobolin Public School **(1609)**
Molong St Condobolin 2877
Ph 02 6895 2134, 02 6895 2532 Fax 02 6895 3665
Lachlan SEG P3 TP4 A HL
condobolin-p.school@det.nsw.edu.au

Condong Public School **(1611)**
McLeod St Condong 2484
Ph 02 6672 2390 Fax 02 6672 5535
Far North Coast SEG P5 TP1
condong-p.school@det.nsw.edu.au

Congewai Public School **(1822)**
Main St Congewai 2325
Ph 02 4998 1366 Fax 02 4998 1603
Hunter/Central Coast 9 SEG P6 TP1
congewai-p.school@det.nsw.edu.au

Coniston Public School **(1612)**
Auburn St Coniston 2500
Ph 02 4229 1117 Fax 02 4226 5094
Wollongong North SEG P4 TP1
coniston-p.school@det.nsw.edu.au

Connells Point Public School (1613)
Riverview Ave Hurstville South 2221
Ph 02 9546 1730, 02 9546 3765 Fax 02 9547 1708
Georges River SEG P2 TP1
connellspt-p.school@det.nsw.edu.au

Conservatorium High School (8147)
Macquarie St Sydney 2000
Ph 02 9351 1350 Fax 02 9351 1359
Port Jackson SEG S9 TP1
conservat-h.school@det.nsw.edu.au

Cooerwull Public School (1615)
319 Main St Lithgow 2790
Ph 02 6351 3106, 02 6351 2975 Fax 02 6353 1075
Bathurst SEG P3 TP2
cooerwull-p.school@det.nsw.edu.au

Coogee Public School (1616)
Byron St & Coogee Bay Rd Coogee 2034
Ph 02 9315 7255 Fax 02 9664 2161
Network 8 SEG P2 TP1
coogee-p.school@det.nsw.edu.au

Cook School (5575)
Rawson Ave Loftus 2232
(PO Box 534 Sutherland NSW 1499)
Ph 02 8539 7155, 02 8539 7965 Fax 02 8539 7462
Woronora River SEG SSP5 TP1
cook-s.school@det.nsw.edu.au

Coolah Central School (1621)
Binnia St Coolah 2843
Ph 02 6377 1101 Fax 02 6377 1004
Warrumbungle SEG C3 TP4 A 9
coolah-c.school@det.nsw.edu.au

Coolamon Central School (1624)
75 Methul St Coolamon 2701
Ph 02 6927 3209 Fax 02 6927 3644
Riverina Central SEG C2 TP2 A 10
coolamon-c.school@det.nsw.edu.au

Coolongolook Public School (1627)
Pacific Hwy Coolongolook 2423
Ph 02 4997 7183 Fax 02 4997 7232
Lower North Coast SEG P5 TP1 A 7
coolongolo-p.school@det.nsw.edu.au

Cooma North Public School (3890)
Baroona Ave Cooma North 2630
Ph 02 6452 1742 Fax 02 6452 4267
Sapphire Coast/Monaro SEG P3 TP2 A C
coomanth-p.school@det.nsw.edu.au

Cooma Public School (1628)
Commissioner St Cooma 2630
Ph 02 6452 1933 Fax 02 6452 2980
Sapphire Coast/Monaro SEG P4 TP2 A C
cooma-p.school@det.nsw.edu.au

Coomealla High School (8494)
Silver City Hwy Dareton 2717
Ph 03 5027 4506 Fax 03 5027 4837
Broken Hill SEG S9 TP6 A 10HL
coomealla-h.school@det.nsw.edu.au

Coonabarabran High School (8347)
Oxley Hwy Coonabarabran 2357
Ph 02 6842 1099 Fax 02 6842 2267
Warrumbungle SEG S9 TP4 A HL
coonabarab-h.school@det.nsw.edu.au

Coonabarabran Public School (1630)
Cnr John St & Newell Hwy Coonabarabran 2357
(PO Box 169 Coonabarabran 2357)
Ph 02 6842 1771 Fax 02 6842 2416
Warrumbungle SEG P3 TP4 A HL
coonabarab-p.school@det.nsw.edu.au

Coonamble High School (8451)
Aberford St Coonamble 2829
(PO Box 27 Coonamble 2829)
Ph 02 6822 1522 Fax 02 6822 2313
Warrumbungle SEG S9 TP6 A HL
coonamble-h.school@det.nsw.edu.au

Coonamble Public School (1631)
Bertram St Coonamble 2829
Ph 02 6822 1966 Fax 02 6822 1294
Warrumbungle SEG P4 TP6 A HL
coonamble-p.school@det.nsw.edu.au

Coopernook Public School (1632)
Macquarie St Coopernook 2426
Ph 02 6556 3162 Fax 02 6556 3367
Manning Camden Haven SEG P5 TP1 A 10
coopernook-p.school@det.nsw.edu.au

Coorabell Public School (1634)
Mango Lane Coorabell 2479
Ph 02 6684 7281 Fax 02 6684 7161
Southern Cross SEG P5 TP1 A 10
coorabell-p.school@det.nsw.edu.au

Cooranbong Public School (1635)
Government Rd Cooranbong 2265
Ph 02 4977 1122 Fax 02 4977 2059
Hunter/Central Coast 6 SEG P4 TP1
cooranbong-p.school@det.nsw.edu.au

Cootamundra High School (8190)
Poole St Cootamundra 2590
Ph 02 6942 2711, 02 6942 2614 Fax 02 6942 1516
Riverina North SEG S9 TP2
cootamundr-h.school@det.nsw.edu.au

Cootamundra Public School (1636)
Cooper St Cootamundra 2590
Ph 02 6942 1402, 02 6942 2415 Fax 02 6942 4187
Riverina North SEG P4 TP2
cootamundr-p.school@det.nsw.edu.au

Copacabana Public School (4548)
Pueblo St Copacabana 2251
Ph 02 4382 1766 Fax 02 4381 1427
Hunter/Central Coast 3 SEG P4 TP1
copacabana-p.school@det.nsw.edu.au

Copmanhurst Public School (1642)
Prescott St Copmanhurst 2460
Ph 02 6647 3121 Fax 02 6647 3282
Clarence SEG P5 TP1 A 7
copmanhurs-p.school@det.nsw.edu.au

Coraki Public School (1644)
Adam St Coraki 2471
Ph 02 6683 2073 Fax 02 6683 2636
The Wilson SEG P4 TP1 A 10
coraki-p.school@det.nsw.edu.au

Coramba Public School (1647)
6 Short St Coramba 2450
Ph 02 6654 4227 Fax 02 6654 4009
Coffs Harbour SEG P5 TP1 A 9
coramba-p.school@det.nsw.edu.au

Coreen School (5637)
Hereward Hwy Blacktown 2148
Ph 02 9622 1095, 02 9622 9195 Fax 02 9831 6178
Nirimba SEG SSP4 TP2
coreen-s.school@det.nsw.edu.au

Corindi Public School (1654)
Coral St Corindi Beach 2456
(PO Box 20 Corindi Beach 2456)
Ph 02 6649 2734 Fax 02 6649 2332
Coffs Harbour SEG P5 TP1 A 10
corindi-p.school@det.nsw.edu.au

Corinella Public School (4300)
Bedgerabong-Burcher Rd Forbes 2871
Ph 02 6856 3118 Fax 02 6856 3141
Lachlan SEG P5 TP4 A 3
corinella-p.school@det.nsw.edu.au

Corndale Public School (1656)
Corndale Rd Corndale 2480
Ph 02 6628 4305 Fax 02 6628 4131
The Wilson SEG P5 TP1 A 9
corndale-p.school@det.nsw.edu.au

Corowa High School (8308)
Redlands Rd Corowa 2646
Ph 02 6033 1889 Fax 02 6033 4099
Riverina South SEG S9 TP2
corowa-h.school@det.nsw.edu.au

Corowa Public School (1658)
244 Honour Avenue Corowa 2646
(PO Box 183 Corowa 2646)
Ph 02 6033 1606, 02 6033 1326 Fax 02 6033 4100
Riverina South SEG P3 TP2
corowa-p.school@det.nsw.edu.au

Corowa South Public School (1659)
158 Hume St Corowa 2646
Ph 02 6033 1535 Fax 02 6033 4021
Riverina South SEG P5 TP2
corowasth-p.school@det.nsw.edu.au

Corrimal East Public School (3877)
Duff Pde Corrimal 2518
Ph 02 4284 4582, 02 4284 3980 Fax 02 4285 2715
Wollongong North SEG P3 TP1
corrimale-p.school@det.nsw.edu.au

Corrimal High School (8191)
Murray Rd Corrimal 2518
(PO Box E5 Corrimal East 2518)
Ph 02 4285 1199 Fax 02 4284 0342
Wollongong North SEG S9 TP1
corrimal-h.school@det.nsw.edu.au

Corrimal Public School (1661)
Princes Hwy Corrimal 2518
Ph 02 4284 4231 Fax 02 4284 1392
Wollongong North SEG P4 TP1
corrimal-p.school@det.nsw.edu.au

Coutts Crossing Public School (1666)
Armidale Rd Coutts Crossing 2460
Ph 02 6649 3225 Fax 02 6649 3051
Clarence SEG P5 TP1 A 9
couttscros-p.school@det.nsw.edu.au

Cowan Public School (1668)
Chandler Ave Cowan 2081
Ph 02 9456 1065 Fax 02 9456 3026
Hornsby Network SEG P5 TP1
cowan-p.school@det.nsw.edu.au

Cowper Public School (1670)
Clarence & Samuel Sts Cowper 2460
Ph 02 6647 6339 Fax 02 6647 6409
Clarence SEG P6 TP1 A 8
cowper-p.school@det.nsw.edu.au

Cowra High School (8148)
Dowell St Cowra 2794
Ph 02 6342 1766 Fax 02 6342 1578
Lachlan SEG S9 TP1
cowra-h.school@det.nsw.edu.au

Cowra Public School (1671)
Vaux St Cowra 2794
(PO Box 285 Cowra 2794)
Ph 02 6342 2400 Fax 02 6341 1357
Lachlan SEG P2 TP1
cowra-p.school@det.nsw.edu.au

Crabbes Creek Public School (1674)
Crabbes Creek Rd Crabbes Creek 2483
Ph 02 6677 1255 Fax 02 6677 1698
Far North Coast SEG P5 TP1 A 9
crabbescrk-p.school@det.nsw.edu.au

Cranebrook High School **(8580)**
Hosking St Cranebrook 2749
Ph 02 4729 0777, 02 4729 0184 Fax 02 4729 1384
Penrith Valley SEG S9 TP2
cranebrook-h.school@det.nsw.edu.au

Crawford Public School **(4504)**
Power St Doonside 2767
Ph 02 9621 7988, 02 9621 7233 Fax 02 9831 1520
Minchinbury SEG P2 TP2
crawford-p.school@det.nsw.edu.au

Crescent Head Public School **(1681)**
Pacific St Crescent Head 2440
Ph 02 6566 0255 Fax 02 6566 0617
Hastings SEG P4 TP1 A 10
crescenthd-p.school@det.nsw.edu.au

Crescent School, The **(5634)**
Fitzroy St Goulburn 2580
Ph 02 4821 3680 Fax 02 4821 1224
Goulburn/Highlands SEG SSP4 TP1
crescent-s.school@det.nsw.edu.au

Crestwood High School **(8552)**
17 Chapel Lane Baulkham Hills 2153
Ph 02 9639 7422, 02 9639 7488 Fax 02 9686 3462
The Hills SEG S9 TP1
crestwood-h.school@det.nsw.edu.au

Crestwood Public School **(4441)**
38 Peel Rd Baulkham Hills 2153
Ph 02 9624 3950, 02 9624 1196 Fax 02 9838 8423
The Hills SEG P2 TP1
crestwood-p.school@det.nsw.edu.au

Cringila Public School **(4037)**
Sheffield St Cringila 2502
Ph 02 4274 1768 Fax 02 4276 2841
Wollongong SEG P5 TP1
cringila-p.school@det.nsw.edu.au

Cromehurst School **(5407)**
8 Nelson Rd Lindfield 2070
Ph 02 9416 9281 Fax 02 9416 1393
North Shore Network SEG SSP4 TP1
cromehurst-s.school@det.nsw.edu.au

Cromer Public School **(4241)**
Carcoola Rd Cromer 2099
Ph 02 9971 0499 Fax 02 9971 4635
Peninsula Network SEG P1 TP1
cromer-p.school@det.nsw.edu.au

Cronulla High School **(8261)**
Captain Cook Drive Cronulla 2230
Ph 02 9523 4017 Fax 02 9523 0909
Port Hacking SEG S9 TP1
cronulla-h.school@det.nsw.edu.au

Cronulla Public School **(1682)**
18-24 Burraneer Bay Rd Cronulla 2230
Ph 02 9523 5098 Fax 02 9523 0931
Port Hacking SEG P5 TP1
cronulla-p.school@det.nsw.edu.au

Cronulla South Public School **(3668)**
Ewos Pde Cronulla 2230
Ph 02 9523 5649, 02 9523 1991 Fax 02 9544 1373
Port Hacking SEG P4 TP1
cronullas-p.school@det.nsw.edu.au

Crookwell High School **(8452)**
Crown St Crookwell 2583
Ph 02 4832 1421 Fax 02 4832 1966
Queanbeyan SEG S9 TP2 A C
crookwell-h.school@det.nsw.edu.au

Crookwell Public School **(1684)**
Denison St Crookwell 2583
Ph 02 4832 1213 Fax 02 4832 1353
Queanbeyan SEG P4 TP2 A C
crookwell-p.school@det.nsw.edu.au

Croppa Creek Public School **(3717)**
Apsley Cres Croppa Creek 2411
Ph 02 6754 5215 Fax 02 6754 5213
New England West SEG P6 TP6 A 4HL
croppacrk-p.school@det.nsw.edu.au

Crossmaglen Public School **(1685)**
384 Crossmaglen Rd Crossmaglen 2441
Ph 02 6653 4295 Fax 02 6653 4081
Coffs Harbour SEG P6 TP1 A 9
crossmagle-p.school@det.nsw.edu.au

Crowdy Head Public School **(3769)**
Geoffrey St Crowdy Head 2427
Ph 02 6556 1356 Fax 02 6556 1151
Manning Camden Haven SEG P6 TP1 A 10
crowdyhead-p.school@det.nsw.edu.au

Crown Street Public School **(3935)**
356 Crown Street Surry Hills 2010
(PO Box 401 Darlinghurst 1300)
Ph 02 9360 4187 Fax 02 9360 9623
Inner City SEG P4 TP1
crownst-p.school@det.nsw.edu.au

Croydon Park Public School **(7412)**
Georges River Rd Croydon Park 2133
Ph 02 9797 9753, 02 9798 8931 Fax 02 9716 7660
Inner West SEG P3 TP1
croydonpk-p.school@det.nsw.edu.au

Croydon Public School **(7411)**
39 Young St Croydon 2132
(PO Box 192 Croydon 2132)
Ph 02 9747 3557, 02 9747 5457 Fax 02 9744 3929
Inner West SEG P2 TP1
croydon-p.school@det.nsw.edu.au

Crystal Creek Public School **(1690)**
RMB 321 North Arm 2484
Ph 02 6679 1223 Fax 02 6679 1539
Far North Coast SEG P5 TP1 A 10
crystalcrk-p.school@det.nsw.edu.au

Cudal Public School **(1695)**
Toogong St Cudal 2864
Ph 02 6364 2101 Fax 02 6364 2246
Orange SEG P5 TP2 A 9
cudal-p.school@det.nsw.edu.au

Cudgegong Valley Public School **(4555)**
Madeira Rd Mudgee 2850
Ph 02 6372 3466 Fax 02 6372 6314
Warrumbungle SEG P2 TP1
cudgegongv-p.school@det.nsw.edu.au

Cudgen Public School **(1696)**
11 Collier Street Cudgen 2487
Ph 02 6674 1287 Fax 02 6674 0924
Far North Coast SEG P5 TP1
cudgen-p.school@det.nsw.edu.au

Culburra Public School **(4485)**
Carlton Cres Culburra Beach 2540
Ph 02 4447 2010 Fax 02 4447 3651
Shoalhaven SEG P4 TP1
culburra-p.school@det.nsw.edu.au

Culcairn Public School **(1698)**
Balfour St Culcairn 2660
Ph 02 6029 8385 Fax 02 6029 8807
Riverina Central SEG P5 TP2
culcairn-p.school@det.nsw.edu.au

Cullen Bullen Public School **(1700)**
15-23 Castlereagh Hwy Cullen Bullen 2790
Ph 02 6359 0543 Fax 02 6359 0547
Bathurst SEG P6 TP2
cullenbull-p.school@det.nsw.edu.au

Cumberland High School **(8905)**
183 Pennant Hills Rd Carlingford 2118
Ph 02 9871 7719, 02 9871 7718 Fax 02 9872 5381
Cumberland SEG S9 TP1
cumberland-h.school@det.nsw.edu.au

Cumnock Public School **(1707)**
Railway Pde Cumnock 2867
Ph 02 6367 7207 Fax 02 6367 7404
Orange SEG P5 TP2 A 10
cumnock-p.school@det.nsw.edu.au

Cundletown Public School **(1708)**
High St Cundletown 2430
Ph 02 6553 9911, 02 6553 9315 Fax 02 6553 9055
Manning Camden Haven SEG P4 TP1 A 10
cundletown-p.school@det.nsw.edu.au

Curl Curl North Public School **(3925)**
Playfair Rd North Curl Curl 2099
Ph 02 9905 1757 Fax 02 9905 6895
Peninsula Network SEG P2 TP1
curlcurln-p.school@det.nsw.edu.au

Curlewis Public School **(1712)**
Goran St Curlewis 2381
Ph 02 6744 1239 Fax 02 6744 1213
New England South SEG P5 TP2 A 8
curlewis-p.school@det.nsw.edu.au

Currabubula Public School **(1714)**
Bolton St Currabubula 2342
Ph 02 6768 9010 Fax 02 6768 9014
New England South SEG P5 TP1 A 8
currabubul-p.school@det.nsw.edu.au

Curran Public School **(4460)**
Melaleuca Drive Macquarie Fields 2564
Ph 02 9605 4534 Fax 02 9829 3973
Ingleburn SEG P4 TP4
curran-p.school@det.nsw.edu.au

Currans Hill Public School **(4625)**
Tramway Drive Currans Hill 2567
(PO Box 322 Narellan 2567)
Ph 02 4648 5910 Fax 02 4648 5913
Macarthur SEG P2 TP1
curranshil-p.school@det.nsw.edu.au

Daceyville Public School **(7413)**
Joffre Cres Daceyville 2032
Ph 02 9349 1211 Fax 02 9349 3957
Botany Bay SEG P3 TP1
daceyville-p.school@det.nsw.edu.au

Dalgety Public School **(1722)**
Cooma St Dalgety 2630
Ph 02 6456 5031 Fax 02 6456 5141
Sapphire Coast/Monaro SEG P6 TP2 A 7C
dalgety-p.school@det.nsw.edu.au

Dalmeny Public School **(4634)**
Dalmeny Drive Prestons 2170
Ph 02 9826 9033, 02 9826 9160 Fax 02 9826 7433
Liverpool SEG P2 TP1
dalmeny-p.school@det.nsw.edu.au

Dalton Public School **(1723)**
Jobson St Dalton 2581
Ph 02 4845 6210 Fax 02 4845 6203
Queanbeyan SEG P5 TP2
dalton-p.school@det.nsw.edu.au

Dapto High School **(8204)**
Cleveland Rd Dapto 2530
Ph 02 4261 1416 Fax 02 4261 2584
Shellharbour SEG S9 TP1
dapto-h.school@det.nsw.edu.au

Dapto Public School **(1727)**
Sierra Drive Horsley 2530
Ph 02 4261 2247, 02 4261 1015 Fax 02 4262 2038
Shellharbour SEG P1 TP1
dapto-p.school@det.nsw.edu.au

Darcy Road Public School **(4222)**
Darcy Rd Wentworthville 2145
Ph 02 9631 3067, 02 9631 0379 Fax 02 9896 3372
The Hills SEG P4 TP1
darcyroad-p.school@det.nsw.edu.au

Dareton Public School **(1732)**
Matong St Dareton 2717
Ph 03 5027 4586 Fax 03 5027 4680
Broken Hill SEG P5 TP6 A 10HL
dareton-p.school@det.nsw.edu.au

Darlinghurst Public School **(7414)**
Womerah Ave Potts Point 2011
Ph 02 9331 4295 Fax 02 9361 5389
Port Jackson SEG P5 TP1
darlinghur-p.school@det.nsw.edu.au

Darlington Point Public School **(1736)**
Hay Rd Darlington Point 2706
Ph 02 6968 4114 Fax 02 6968 4269
Riverina North West SEG P5 TP6 A 9
darlingtpt-p.school@det.nsw.edu.au

Darlington Public School **(1735)**
Golden Grove St Chippendale 2008
Ph 02 9516 2300 Fax 02 9550 4587
Inner City SEG P4 TP1
darlington-p.school@det.nsw.edu.au

Davidson High School **(8479)**
Mimosa St Frenchs Forest 2086
Ph 02 9451 0022, 02 9451 0312 Fax 02 9975 3560
Middle Harbour Network SEG S9 TP1
davidson-h.School@det.nsw.edu.au

Dawson Public School **(4446)**
Stuart Rd Dharruk 2770
Ph 02 9625 9031, 02 9625 0414 Fax 02 9832 1332
Mt Druitt SEG P3 TP4
dawson-p.school@det.nsw.edu.au

Dee Why Public School **(1744)**
Regent St Dee Why 2099
Ph 02 9971 8635 Fax 02 9971 5516
Peninsula Network SEG P4 TP1
deewhy-p.school@det.nsw.edu.au

Deepwater Public School **(1742)**
Young St Deepwater 2371
Ph 02 6734 5395 Fax 02 6734 5407
New England North SEG P5 TP4 A 6
deepwater-p.school@det.nsw.edu.au

Delegate Public School **(1745)**
Campbell St Delegate 2633
Ph 02 6458 8183 Fax 02 6458 8260
Sapphire Coast/Monaro SEG P5 TP4 A 8C
delegate-p.school@det.nsw.edu.au

Delungra Public School **(1747)**
Wallangra St Delungra 2403
Ph 02 6724 8407 Fax 02 6724 8321
New England North SEG P5 TP4 A 9
delungra-p.school@det.nsw.edu.au

Deniliquin High School **(8218)**
Harfleur St Deniliquin 2710
Ph 03 5881 1211, 03 5881 1280 Fax 03 5881 5115
Riverina South West SEG S9 TP4 A L
deniliquin-h.school@det.nsw.edu.au

Deniliquin North Public School **(4281)**
Victoria St Deniliquin 2710
Ph 03 5881 1042 Fax 03 5881 5086
Riverina South West SEG P4 TP4 A L
deniliquin-p.school@det.nsw.edu.au

Deniliquin South Public School **(4112)**
Sloane St Deniliquin 2710
Ph 03 5881 2045 Fax 03 5881 5079
Riverina South West SEG P4 TP4 A L
deniliqsth-p.school@det.nsw.edu.au

Denison College of Secondary Education, Bathurst High Campus **(8103)**
Hope St Bathurst 2795
Ph 02 6331 3755, 02 6331 3631 Fax 02 6332 2302
Bathurst SEG S9 TP1 A C
bathurst-h.school@det.nsw.edu.au

Denison College of Secondary Education, Kelso High Campus **(8517)**
Boyd St Kelso 2795
(PO Box 499 Kelso 2795)
Ph 02 6331 4544, 02 6331 4669 Fax 02 6332 1678
Bathurst SEG S9 TP1 A C
kelso-h.school@det.nsw.edu.au

Denistone East Public School **(3862)**
Lovell Rd Eastwood 2122
Ph 02 9874 6678, 02 9874 4479 Fax 02 9858 5300
Lane Cove Network SEG P1 TP1
denistonee-p.school@det.nsw.edu.au

Denman Public School **(1749)**
Paxton St Denman 2328
Ph 02 6547 2491 Fax 02 6547 2603
Hunter/Central Coast 8 SEG P4 TP2
denman-p.school@det.nsw.edu.au

Dobroyd Point Public School **(3873)**
Waratah St Haberfield 2045
Ph 02 9797 8249 Fax 02 9716 8009
Port Jackson SEG P4 TP1
dobroydpt-p.school@det.nsw.edu.au

Doonside High School (8399)
Power St Doonside 2767
Ph 02 9622 2463, 02 9621 3761 Fax 02 9831 5951
Minchinbury SEG S8 TP2
doonside-h.school@det.nsw.edu.au

Doonside Public School (1760)
Kildare St Doonside 2767
Ph 02 9622 3575, 02 9622 5179 Fax 02 9831 8019
Minchinbury SEG P4 TP2
doonside-p.school@det.nsw.edu.au

Dooralong Public School (1761)
RMB 860 Dooralong Rd Wyong 2259
Ph 02 4355 1246 Fax 02 4355 1200
Hunter/Central Coast 2 SEG P5 TP1
dooralong-p.school@det.nsw.edu.au

Dora Creek Public School (1762)
Cooranbong Rd Dora Creek 2264
Ph 02 4973 1261 Fax 02 4970 5718
Hunter/Central Coast 6 SEG P5 TP1
doracreek-p.school@det.nsw.edu.au

Dorchester School (5454)
Briar Rd Campbelltown 2560
Ph 02 4629 3802 Fax 02 46293879
Campbelltown SEG SSP4 TP2
dorchester-s.school@det.nsw.edu.au

Dorrigo High School (8453)
Waterfall Way Dorrigo 2453
(PO Box 156 Dorrigo 2453)
Ph 02 6657 2001 Fax 02 6657 2281
Mid North Coast SEG S9 TP1 A 10
dorrigo-h.school@det.nsw.edu.au

Dorrigo Public School (7316)
Hickory St Dorrigo 2453
(PO Box 619 Dorrigo 2453)
Ph 02 6657 2097 Fax 02 6657 2430
Mid North Coast SEG P4 TP1 A 10
dorrigo-p.school@det.nsw.edu.au

Dorroughby Environmental Education Centre (5683)
2101 Dunoon Rd Dorroughby 2480
Ph 02 6689 5286 Fax 02 6689 5042
The Wilson SEG EEC1 TP1 A 8
dorroughby-e.school@det.nsw.edu.au

Double Bay Public School (1768)
William St Double Bay 2028
Ph 02 9363 3456, 02 9363 2823 Fax 02 9327 8901
Network 8 SEG P3 TP1
doublebay-p.school@det.nsw.edu.au

Doubtful Creek Public School (1769)
Doubtful Creek 2470
Ph 02 6667 1102 Fax 02 6667 1139
Richmond Valley SEG P6 TP2 A 10
doubtfulck-p.school@det.nsw.edu.au

Douglas Park Public School (1770)
111 Camden Rd Douglas Park 2569
Ph 02 4632 7261 Fax 02 4632 7440
Macarthur SEG P4 TP1
douglaspk-p.school@det.nsw.edu.au

Drake Public School (1771)
Allison Street Drake 2469
Ph 02 6737 6677 Fax 02 6737 6725
Richmond Valley SEG P5 TP2 A 4
drake-p.school@det.nsw.edu.au

Drummond Memorial Public School (1058)
Rusden St Armidale 2350
Ph 02 6772 3736, 02 6772 6482 Fax 02 6771 2275
New England Central SEG P4 TP1 A C
drummondm-p.school@det.nsw.edu.au

Drummoyne Public School (1774)
Rawson Ave Drummoyne 2047
Ph 02 9181 2636, 02 9181 1927 Fax 02 9719 8741
Port Jackson SEG P2 TP1
drummoyne-p.school@det.nsw.edu.au

Dubbo College Delroy Campus (8543)
East St Dubbo West 2830
Ph 02 6882 7955, 02 6882 7171 Fax 02 6881 8749
Dubbo SEG S9 TP1
delroy-h.school@det.nsw.edu.au

Dubbo College Senior Campus (8110)
Yarrandale Rd Dubbo 2830
Ph 02 6882 4655 Fax 02 6882 4332
Dubbo SEG S9 TP1
dubbo-h.school@det.nsw.edu.au

Dubbo College South Campus (8417)
Boundary Rd Dubbo 2830
Ph 02 6882 3744 Fax 02 6882 3213
Dubbo SEG S9 TP1
dubbosouth-h.school@det.nsw.edu.au

Dubbo North Public School (1776)
Fitzroy St Dubbo 2830
Ph 02 6882 4689 Fax 02 6884 3442
Dubbo SEG P3 TP1
dubbonorth-p.school@det.nsw.edu.au

Dubbo Public School (1775)
181 Darling St Dubbo 2830
Ph 02 6882 2399, 02 6882 1589 Fax 02 6884 3308
Dubbo SEG P3 TP1
dubbo-p.school@det.nsw.edu.au

Dubbo School of Distance Education (4587)
Myall St Dubbo 2830
Ph 02 5804 7000, 02 6836 1120 Fax 02 6884 0777
Dubbo SEG C1 TP1
dubbo-d.school@det.nsw.edu.au

Dubbo South Public School (1811)
Fitzroy St Dubbo 2830
Ph 02 6882 2529, 02 6882 4480 Fax 02 6882 4196
Dubbo SEG P1 TP1
dubbosouth-p.school@det.nsw.edu.au

Dubbo West Public School (3591)
East St Dubbo 2830
Ph 02 6882 3086, 02 6882 4609 Fax 02 6884 3439
Dubbo SEG P2 TP1
dubbowest-p.school@det.nsw.edu.au

Dudley Public School (1778)
Ocean & Boundary Sts Dudley 2290
Ph 02 4944 7203 Fax 02 4942 6097
Hunter/Central Coast 7 SEG P4 TP1
dudley-p.school@det.nsw.edu.au

Dulwich High School of Visual Arts and Design (8833)
Seaview St Dulwich Hill 2203
Ph 02 9560 7299, 02 9560 7377 Fax 02 9550 0929
Inner City SEG S9 TP1
dulwich-h.school@det.nsw.edu.au

Dulwich Hill Public School (4496)
Kintore St Dulwich Hill 2203
Ph 02 9559 2699 Fax 02 9559 5676
Inner City SEG P2 TP1
dulwichhil-p.school@det.nsw.edu.au

Dundas Public School (4029)
Kissing Point Rd Dundas 2117
Ph 02 9638 2813, 02 9638 3959 Fax 02 9638 0983
Cumberland SEG P3 TP1
dundas-p.school@det.nsw.edu.au

Dundurrabin Public School (1788)
70 Mount St Dundurrabin via Dorrigo 2453
Ph 02 6657 8133 Fax 02 6657 8051
Mid North Coast SEG P6 TP4 A 5
dundurrabi-p.school@det.nsw.edu.au

Dunedoo Central School (1789)
Digilah St Dunedoo 2844
Ph 02 6375 1489, 02 6375 1280 Fax 02 6375 1152
Warrumbungle SEG C3 TP4 A 10
dunedoo-c.school@det.nsw.edu.au

Dungay Public School (1791)
305 Tomewin Rd Dungay via Murwillumbah 2484
Ph 02 6672 2174 Fax 02 6672 5967
Far North Coast SEG P5 TP1
dungay-p.school@det.nsw.edu.au

Dungog High School (8472)
Eloiza St Dungog 2420
Ph 02 4992 3022 Fax 02 4992 3125
Hunter/Central Coast 10 SEG S9 TP1
dungog-h.school@det.nsw.edu.au

Dungog Public School (1792)
9 Chapman St Dungog 2420
Ph 02 4992 1384 Fax 02 4992 3150
Hunter/Central Coast 10 SEG P4 TP1
dungog-p.school@det.nsw.edu.au

Dungowan Public School (1793)
Tamworth Rd Dungowan 2340
Ph 02 6769 4259 Fax 02 6769 4342
New England Central SEG P5 TP1 A 7
dungowan-p.school@det.nsw.edu.au

Dunoon Public School (1797)
James St Dunoon 2480
Ph 02 6689 5208 Fax 02 6689 5350
The Wilson SEG P5 TP1 A 8
dunoon-p.school@det.nsw.edu.au

Dural Public School (1799)
622 Old Northern Rd Dural 2158
Ph 02 9651 1164, 02 9651 2087 Fax 02 9651 4172
Hornsby Network SEG P3 TP1
dural-p.school@det.nsw.edu.au

Duranbah Public School (1801)
105 Duranbah Rd Duranbah 2487
Ph 02 6677 7221 Fax 02 6677 7547
Far North Coast SEG P5 TP1 A 10
duranbah-p.school@det.nsw.edu.au

Duri Public School (1802)
Dungowan Rd Duri 2344
Ph 02 6768 0214 Fax 02 6768 0209
New England South SEG P5 TP1 A 8
duri-p.school@det.nsw.edu.au

Durrumbul Public School (1803)
Durrumbul Rd Durrumbul 2482
Ph 02 6684 5229 Fax 02 6684 5535
Southern Cross SEG P5 TP1 A 10
durrumbul-p.school@det.nsw.edu.au

Duval High School (8492)
Crest Rd Armidale 2350
(PO Box 751 Armidale 2350)
Ph 02 6772 1266 Fax 02 6771 1766
New England Central SEG S9 TP1 A C
duval-h.school@det.nsw.edu.au

E A Southee Public School (4383)
Poole St Cootamundra 2590
Ph 02 6942 1669 Fax 02 6942 4190
Riverina North SEG P4 TP2
easouthee-p.school@det.nsw.edu.au

Eagle Vale High School (8569)
Drysdale Rd Eagle Vale 2558
Ph 02 4626 5088, 02 4626 5566 Fax 02 4628 0408
Campbelltown SEG S9 TP4
eaglevale-h.school@det.nsw.edu.au

Earlwood Public School (1807)
Homer St Earlwood 2206
Ph 02 9789 5066 Fax 02 9789 3479
Inner West SEG P2 TP1
earlwood-p.school@det.nsw.edu.au

EAST
Most schools whose name includes EAST are listed under the main name, eg for EAST NOWRA see NOWRA EAST. The exceptions are listed below.

East Hills Boys High School (8206)
Lucas Rd Panania 2213
Ph 02 9773 7806, 02 9773 7515 Fax 02 9792 3849
East Hills SEG S9 TP1
easthillsb-h.school@det.nsw.edu.au

East Hills Girls High School (8187)
Lucas Rd Panania 2213
Ph 02 9773 9160 Fax 02 9792 3853
East Hills SEG S9 TP1
easthillsg-h.school@det.nsw.edu.au

East Hills Public School (3924)
Lucas Rd Panania 2213
Ph 02 9773 8468, 02 9773 4204 Fax 02 9792 3948
East Hills SEG P5 TP1
easthills-p.school@det.nsw.edu.au

Eastern Creek Public School (1808)
Rooty Hill Rd South Eastern Creek 2766
Ph 02 9625 8112 Fax 02 9832 2412
Minchinbury SEG P4 TP2
easterncrk-p.school@det.nsw.edu.au

Eastlakes Public School (4516)
Florence Ave Eastlakes 2018
Ph 02 9667 3659 Fax 02 9667 4791
Botany Bay SEG P4 TP1
eastlakes-p.school@det.nsw.edu.au

Eastwood Heights Public School (4041)
Lincoln St Eastwood 2122
Ph 02 9876 4732, 02 9876 4105 Fax 02 9876 8945
Lane Cove Network SEG P3 TP1
eastwoodht-p.school@det.nsw.edu.au

Eastwood Public School (7416)
Rowe St Eastwood 2122
Ph 02 9874 1600, 02 9874 1029 Fax 02 9804 7495
Lane Cove Network SEG P2 TP1
eastwood-p.school@det.nsw.edu.au

Ebenezer Public School (1813)
531 Sackville Rd Ebenezer 2756
Ph 02 4579 9282 Fax 02 4579 9586
Hawkesbury SEG P5 TP1
ebenezer-p.school@det.nsw.edu.au

Ebor Public School (1814)
Ebor St Ebor 2453
Ph 02 6775 9136 Fax 02 6775 9182
New England North SEG P6 TP4 A 4
ebor-p.school@det.nsw.edu.au

Eden Marine High School (8487)
Barclay St Eden 2551
Ph 02 6496 1541 Fax 02 6496 2144
Sapphire Coast/Monaro SEG S9 TP1
edenmarine-h.school@det.nsw.edu.au

Eden Public School (1816)
Imlay St Eden 2551
Ph 02 6496 1169 Fax 02 6496 1383
Sapphire Coast/Monaro SEG P4 TP1
eden-p.school@det.nsw.edu.au

Edensor Park Public School (4583)
Swan & Gwandalan Rds Edensor Park 2176
Ph 02 9823 5151, 02 9823 5111 Fax 02 9823 7828
Hoxton SEG P3 TP1
edensorpk-p.school@det.nsw.edu.au

Edgeware School (5737)
Burnett St & Tennett Pde Hurlstone Park 2193
Ph 02 9554 7044 Fax 02 9554 7046
Inner City SEG SSP4 TP1
edgeware-s.school@det.nsw.edu.au

Edgeworth Heights Public School (4155)
Ridley St Edgeworth 2285
Ph 02 4958 1180 Fax 02 4958 4386
Hunter/Central Coast 4 SEG P4 TP1
edgeworthh-p.school@det.nsw.edu.au

Edgeworth Public School (3564)
Minmi Rd Edgeworth 2285
Ph 02 4958 1831 Fax 02 4950 8174
Hunter/Central Coast 6 SEG P2 TP1
edgeworth-p.school@det.nsw.edu.au

Edward Public School (4418)
Butler St Deniliquin 2710
(PO Box 455 Deniliquin 2710)
Ph 03 5881 2612 Fax 03 5881 5090
Riverina South West SEG P4 TP4 A L
edward-p.school@det.nsw.edu.au

Eglinton Public School (1823)
Alexander St Eglinton 2795
Ph 02 6337 1205 Fax 02 6337 1394
Bathurst SEG P3 TP1
eglinton-p.school@det.nsw.edu.au

Elands Public School (1824)
Wingham-Ellenborough Rd Elands 2429
Ph 02 6550 4557 Fax 02 6550 4412
Lower North Coast SEG P6 TP2 A 5
elands-p.school@det.nsw.edu.au

Elanora Heights Public School (4199)
43 Elanora Road Elanora Heights 2101
Ph 02 9913 7283, 02 9913 7229 Fax 02 9913 3749
Peninsula Network SEG P2 TP1
elanorahts-p.school@det.nsw.edu.au

Elderslie High School (8521)
Hilder St Narellan 2567
(PO Box 69 Narellan 2567)
Ph 02 4658 1110 Fax 02 4658 0219
Macarthur SEG S8 TP1
elderslie-h.school@det.nsw.edu.au

Eleebana Public School (4034)
Ian St Eleebana 2282
Ph 02 4946 8927 Fax 02 4942 8437
Hunter/Central Coast 7 SEG P3 TP1
eleebana-p.school@det.nsw.edu.au

Elermore Vale Public School (4163)
Jubilee Rd Wallsend 2287
Ph 02 4955 9016, 02 4951 5696 Fax 02 4950 2195
Hunter/Central Coast 6 SEG P3 TP1
elermoreva-p.school@det.nsw.edu.au

Elizabeth Macarthur High School (8584)
Waterworth Drive Narellan 2567
Ph 02 4646 1899 Fax 02 4647 1569
Macarthur SEG S9 TP1
elizabeth-h.school@det.nsw.edu.au

Ellalong Public School (1826)
Olney St Ellalong 2325
Ph 02 4998 1360 Fax 02 4998 1813
Hunter/Central Coast 9 SEG P5 TP1
ellalong-p.school@det.nsw.edu.au

Ellangowan Public School (1827)
Ellangowan Rd Casino 2470
Ph 02 6663 7155 Fax 02 6663 7011
Richmond Valley SEG P5 TP2 A 7
ellangowan-p.school@det.nsw.edu.au

Ellerston Public School (1830)
Ellerston 2337
Ph 02 6546 5157 Fax 02 6546 5106
Hunter/Central Coast 8 SEG P5 TP4 A 2
ellerston-p.school@det.nsw.edu.au

Ellison Public School (4568)
Ellison Rd Springwood 2777
Ph 02 4751 5099 Fax 02 4751 4022
Blue Mountains SEG P3 TP1
ellison-p.school@det.nsw.edu.au

Eltham Public School (1835)
Boatharbour Rd Eltham 2480
Ph 02 6629 1321 Fax 02 6629 1027
The Wilson SEG P5 TP1 A 9
eltham-p.school@det.nsw.edu.au

Emerton Public School (4422)
Hindemith Ave Emerton 2770
Ph 02 9628 6367, 02 9628 9868 Fax 02 9628 1062
Mt Druitt SEG P4 TP4
emerton-p.school@det.nsw.edu.au

Emmaville Central School (1838)
Park Rd Emmaville 2371
Ph 02 6734 7235 Fax 02 6734 7492
New England North SEG C4 TP6 A 6
emmaville-c.school@det.nsw.edu.au

Empire Bay Public School (1839)
Empire Bay Drive Empire Bay 2256
Ph 02 4369 1796 Fax 02 4363 1052
Hunter/Central Coast 3 SEG P3 TP1
empirebay-p.school@det.nsw.edu.au

Empire Vale Public School (1840)
River Drive Empire Vale 2478
Ph 02 6683 4298 Fax 02 6683 4407
Southern Cross SEG P5 TP1 A 10
empirevale-p.school@det.nsw.edu.au

Emu Heights Public School (4442)
Wedmore Rd Emu Plains 2750
Ph 02 4735 1077, 02 4735 1290 Fax 02 4735 6374
Blue Mountains SEG P3 TP1
emuheights-p.school@det.nsw.edu.au

Emu Plains Public School (1841)
Emerald St Emu Plains 2750
Ph 02 4735 1233, 02 4735 1256 Fax 02 4735 6376
Blue Mountains SEG P3 TP1
emuplains-p.school@det.nsw.edu.au

Endeavour Sports High School (8404)
Taren Pt Rd & The Boulevarde Caringbah 2229
(PO Box 226 Caringbah 1495)
Ph 02 9524 0615, 02 9524 0616 Fax 02 9540 4458
Port Hacking SEG S8 TP1
endeavour-h.school@det.nsw.edu.au

Enfield Public School (1844)
Beaumaris St Enfield 2136
Ph 02 9747 3514, 02 9744 8048 Fax 02 9744 5189
Strathfield SEG P4 TP1
enfield-p.school@det.nsw.edu.au

Engadine High School (8432)
Porter Rd Engadine 2233
Ph 02 9520 0411, 02 9520 0124 Fax 02 9520 5293
Woronora River SEG S8 TP1
engadine-h.school@det.nsw.edu.au

Engadine Public School (1845)
Waratah Rd Engadine 2233
Ph 02 9520 8559, 02 9520 8071 Fax 02 9548 1186
Woronora River SEG P4 TP1
engadine-p.school@det.nsw.edu.au

Engadine West Public School (4292)
Woronora Rd Engadine 2233
Ph 02 9520 8134 Fax 02 9520 5314
Woronora River SEG P2 TP1
engadinew-p.school@det.nsw.edu.au

Enngonia Public School (3626)
Belalie St Enngonia 2840
Ph 02 6874 7550 Fax 02 6874 7623
Bourke SEG P5 TP8 A 1HL
enngonia-p.school@det.nsw.edu.au

Entrance Public School, The (1849)
Oakland Ave The Entrance 2261
Ph 02 4332 2154, 02 4332 2703 Fax 02 4334 3202
Hunter/Central Coast 1 SEG P2 TP1
thentrance-p.school@det.nsw.edu.au

Epping Boys High School (8884)
213 Vimiera Rd Eastwood 2122
Ph 02 9869 2701 Fax 02 9868 1198
Hills Network SEG S8 TP1
eppingboy-h.school@det.nsw.edu.au

Epping Heights Public School (4038)
Kent St Epping 2121
Ph 02 9876 2791, 02 9869 1236 Fax 02 9876 6872
Hills Network SEG P3 TP1
eppinghts-p.school@det.nsw.edu.au

Epping North Public School (4165)
Boundary Rd North Epping 2121
Ph 02 9876 5254 Fax 02 9868 5745
Hills Network SEG P3 TP1
eppingnth-p.school@det.nsw.edu.au

Epping Public School (1850)
Norfolk Rd Epping 2121
Ph 02 9876 1452, 02 9869 1352 Fax 02 9876 6873
Hills Network SEG P3 TP1
epping-p.school@det.nsw.edu.au

Epping West Public School (1851)
96 Carlingford Rd Epping 2121
Ph 02 9876 8255 Fax 02 9868 1209
Hills Network SEG P2 TP1
eppingwest-p.school@det.nsw.edu.au

Eraring Public School (1853)
5 Point Piper Rd Eraring 2264
Ph 02 4973 1196 Fax 02 4970 5584
Hunter/Central Coast 6 SEG P5 TP1
eraring-p.school@det.nsw.edu.au

Erina Heights Public School (1856)
Serpentine Rd Erina Heights 2260
Ph 02 4367 7608, 02 4365 4221 Fax 02 4365 3104
Hunter/Central Coast 2 SEG P3 TP1
erinahts-p.school@det.nsw.edu.au

Erina High School (8405)
152 The Entrance Rd Erina 2250
Ph 02 4367 7353, 02 4367 7246 Fax 02 4365 3086
Hunter/Central Coast 1 SEG S8 TP1
erina-h.school@det.nsw.edu.au

Ermington Public School (1860)
Winbourne St West Ryde 2114
Ph 02 9874 4109, 02 9804 7254 Fax 02 9804 7552
Lane Cove Network SEG P3 TP1
ermington-p.school@det.nsw.edu.au

Ermington West Public School (4125)
Vignes St Ermington 2115
Ph 02 9638 5302, 02 9638 7748 Fax 02 9638 0196
Cumberland SEG P4 TP1
ermingtonw-p.school@det.nsw.edu.au

Errowanbang Public School (3969)
Errowanbang Rd Carcoar 2791
Ph 02 6366 7218 Fax 02 6366 7243
Orange SEG P6 TP2 A 8
errowanban-p.school@det.nsw.edu.au

Erskine Park High School (8590)
Swallow Drive Erskine Park 2759
Ph 02 9834 3536, 02 9834 3537 Fax 02 9834 3864
Minchinbury SEG S8 TP2
erskinepk-h.school@det.nsw.edu.au

Erskineville Public School (4147)
Swanson St Erskineville 2043
Ph 02 9557 5206, 02 9519 4898 Fax 02 9550 4593
Network 8 SEG P4 TP1
erskinevil-p.school@det.nsw.edu.au

Eschol Park Public School (4558)
Eschol Park Drive Eschol Park 2558
Ph 02 9824 7111 Fax 02 9820 3046
Campbelltown SEG P2 TP2
escholpark-p.school@det.nsw.edu.au

Ettalong Public School (1864)
Karingi St Ettalong Beach 2257
Ph 02 4341 3550, 02 4341 3655 Fax 02 4343 1517
Hunter/Central Coast 3 SEG P2 TP1
ettalong-p.school@det.nsw.edu.au

Euabalong West Public School (1867)
Euabba St Euabalong West 2877
Ph 02 6896 6649 Fax 02 6896 6691
Riverina North West SEG P6 TP6 A 5HL
euabalongw-p.school@det.nsw.edu.au

Euchareena Public School (1869)
Walter St Euchareena 2866
Ph 02 6364 1062 Fax 02 6364 1094
Orange SEG P6 TP2 A 7
euchareena-p.school@det.nsw.edu.au

Eugowra Public School (1870)
Hill St Eugowra 2806
Ph 02 6859 2233 Fax 02 6859 2581
Lachlan SEG P5 TP4 A 10
eugowra-p.school@det.nsw.edu.au

Eumungerie Public School (1873)
Wheaton St Eumungerie 2831
Ph 02 6888 1020 Fax 02 6888 1094
Dubbo SEG P6 TP2 A 5
eumungerie-p.school@det.nsw.edu.au

Eungai Public School (1874)
Main St Eungai Creek 2441
Ph 02 6569 9248 Fax 02 6569 9428
Mid North Coast SEG P5 TP1 A 9
eungai-p.school@det.nsw.edu.au

Eureka Public School (1879)
Lismore-Brunswick River Rd Eureka 2480
Ph 02 6688 4272 Fax 02 6688 4039
The Wilson SEG P5 TP1 A 9
eureka-p.school@det.nsw.edu.au

Eurongilly Public School (1883)
Eurongilly Rd Eurongilly 2663
Ph 02 6924 5227 Fax 02 6924 5224
Riverina Central SEG P6 TP2 A 8
eurongilly-p.school@det.nsw.edu.au

Euston Public School (1885)
Sturt Hwy Euston 2737
Ph 03 5026 3766 Fax 03 5026 3040
Broken Hill SEG P5 TP6 A 8HL
euston-p.school@det.nsw.edu.au

Evans High School (8420)
Walters Rd Blacktown 2148
Ph 02 9621 3622, 02 9621 3134 Fax 02 9831 2747
Minchinbury SEG S9 TP2
evans-h.school@det.nsw.edu.au

Evans River Community School (1886)
Cypress Street Evans Head 2473
Ph 02 6682 6666 Fax 02 6682 6777
Richmond Valley SEG C9 TP1
evansriver-c.school@det.nsw.edu.au

Excelsior Public School (1890)
Rondelay Drive Castle Hill 2154
Ph 02 9634 3774, 02 9634 2571 Fax 02 9899 1799
The Hills SEG P3 TP1
excelsior-p.school@det.nsw.edu.au

Exeter Public School (1891)
School Rd Exeter 2579
Ph 02 4883 4280 Fax 02 4883 4085
Goulburn/Highlands SEG P5 TP1
exeter-p.school@det.nsw.edu.au

Fairfax Public School (1894)
Maules Creek Maules Creek via Boggabri 2382
Ph 02 6794 4502 Fax 02 6794 4547
New England West SEG P6 TP6 A 4L
fairfax-p.school@det.nsw.edu.au

Fairfield Heights Public School (3632)
Station St Fairfield 2165
Ph 02 9724 2254, 02 9724 4255 Fax 02 9727 9027
Fairfield SEG P1 TP2
fairfieldh-p.school@det.nsw.edu.au

Fairfield High School (8550)
The Horsley Drive Fairfield 2165
Ph 02 9727 2111 Fax 02 9724 3496
Fairfield SEG S8 TP2
fairfield-h.school@det.nsw.edu.au

Fairfield Public School (1895)
68-82 Smart St Fairfield 2165
(PO Box 901 Fairfield 1860)
Ph 02 9724 1065, 02 9724 2527 Fax 02 9727 9160
Fairfield SEG P2 TP2
fairfield-p.school@det.nsw.edu.au

Fairfield West Public School (1896)
Palmerston Rd Fairfield West 2165
Ph 02 9604 5568, 02 9604 5237 Fax 02 9725 5379
Fairfield SEG P2 TP2
fairfieldw-p.school@det.nsw.edu.au

Fairvale High School (8456)
Thorney Rd & Maude St Fairfield West 2165
Ph 02 9604 3118 Fax 02 9725 5246
Fairfield SEG S8 TP2
fairvale-h.school@det.nsw.edu.au

Fairvale Public School (4009)
Wolseley St Fairfield 2165
Ph 02 9724 3470, 02 9724 4326 Fax 02 9727 8863
Fairfield SEG P2 TP2
fairvale-p.school@det.nsw.edu.au

Fairy Meadow Public School (1898)
Princes Hwy Fairy Meadow 2519
Ph 02 4284 2009, 02 4284 4496 Fax 02 4285 1753
Wollongong North SEG P2 TP1
fairymeado-p.school@det.nsw.edu.au

Falls Creek Public School (1901)
26 Vidler St Falls Creek 2540
Ph 02 4447 8243 Fax 02 4447 8023
Shoalhaven SEG P5 TP1
fallscreek-p.school@det.nsw.edu.au

Farmborough Road Public School (3976)
56 Farmborough Rd Unanderra 2526
(PO Box 229 Unanderra 2527)
Ph 02 4271 1133, 02 4271 1216 Fax 02 4271 5335
Wollongong SEG P4 TP1
farmborord-p.school@det.nsw.edu.au

Farrer Memorial Agricultural High School (8111)
585 Calala Lane Calala via Tamworth 2340
#VALUE!
New England Central SEG S9 TP1 A 10
farreragri-h.school@det.nsw.edu.au

Fassifern Public School (1904)
Fassifern Rd Fassifern 2283
Ph 02 4959 2708 Fax 02 4950 4923
Hunter/Central Coast 6 SEG P5 TP1
fassifern-p.school@det.nsw.edu.au

Faulconbridge Public School (4354)
Grose Rd Faulconbridge 2776
Ph 02 4751 2208 Fax 02 4751 3933
Blue Mountains SEG P3 TP1
faulconbri-p.school@det.nsw.edu.au

Fennell Bay Public School (4208)
Bay Rd Fennell Bay 2283
Ph 02 4959 2264 Fax 02 4950 4439
Hunter/Central Coast 6 SEG P3 TP1
fennellbay-p.school@det.nsw.edu.au

Fern Bay Public School (3996)
Vardon St Fern Bay 2295
Ph 02 4928 1668 Fax 02 4920 1223
Hunter/Central Coast 4 SEG P5 TP1
fernbay-p.school@det.nsw.edu.au

Ferncourt Public School (5114)
Premier St Marrickville 2204
Ph 02 9558 3978, 02 9559 2715 Fax 02 9559 3268
Inner City SEG P3 TP1
ferncourt-p.school@det.nsw.edu.au

Fernleigh Public School (2214)
451 Fernleigh Rd Fernleigh 2479
Ph 02 6687 8267 Fax 02 6687 8570
Southern Cross SEG P5 TP1 A 10
fernleigh-p.school@det.nsw.edu.au

Field of Mars Environmental Education Centre (5428)
Pittwater Rd East Ryde 2113
(PO Box 2082 Boronia Park 2111)
Ph 02 9816 1298 Fax 02 9816 3279
Lane Cove Network SEG EEC2 TP1
fieldofmar-e.school@det.nsw.edu.au

Figtree Heights Public School (4462)
St Georges Ave Figtree 2525
Ph 02 4228 6770, 02 4228 6555 Fax 02 4226 5061
Wollongong SEG P4 TP1
figtreehts-p.school@det.nsw.edu.au

Figtree High School (8449)
Gibsons Rd Figtree 2525
Ph 02 4271 2787 Fax 02 4271 6626
Wollongong SEG S9 TP1
figtree-h.school@det.nsw.edu.au

Figtree Public School (3964)
Gibsons Rd Figtree 2525
Ph 02 4271 6888 Fax 02 4271 6760
Wollongong SEG P3 TP1
figtree-p.school@det.nsw.edu.au

Fingal Head Public School (1915)
100 Letitia Rd Fingal Head 2487
Ph 07 5524 2315 Fax 07 5524 9359
Far North Coast SEG P5 TP1 A 10
fingalhead-p.school@det.nsw.edu.au

Finley High School (8360)
Tocumwal St Finley 2713
Ph 03 5883 1344 Fax 03 5883 2396
Riverina South West SEG S9 TP4
finley-h.school@det.nsw.edu.au

Finley Public School (3945)
Coree St Finley 2713
Ph 03 5883 1135 Fax 03 5883 2397
Riverina South West SEG P4 TP4
finley-p.school@det.nsw.edu.au

Fisher Road School (5405)
115 Fisher Rd Dee Why 2099
Ph 02 9981 5222, 02 9981 5399 Fax 02 9982 5439
Peninsula Network SEG SSP4 TP1
fisherrd-s.school@det.nsw.edu.au

Five Dock Public School (1920)
Henry St Five Dock 2046
Ph 02 9713 7044, 02 9713 4967 Fax 02 9712 1256
Port Jackson SEG P3 TP1
fivedock-p.school@det.nsw.edu.au

Five Islands School (5723)
Marmong St Booragul 2284
Ph 02 49530145 Fax 02 49530166
Hunter/Central Coast 5 SEG SSP5 TP1
fiveis-s.school@det.nsw.edu.au

Five Mile Tree Public School (1922)
Bigga-Crookwell Rd Crooked Corner 2583
Ph 02 4835 3154 Fax 02 4835 3153
Queanbeyan SEG P6 TP4 A 6
fivemiletr-p.school@det.nsw.edu.au

Flinders Public School (4463)
Adam Murray Way Flinders 2529
(PO Box A179 Shellharbour 2529)
Ph 02 4295 7355 Fax 02 4295 7455
Shellharbour SEG P2 TP1
flinders-p.school@det.nsw.edu.au

Floraville Public School (4379)
Floraville Rd Belmont 2280
Ph 02 4945 4845, 02 4945 8588 Fax 02 4947 7669
Hunter/Central Coast 7 SEG P2 TP1
floraville-p.school@det.nsw.edu.au

Forbes High School **(8194)**
18 Wyndham Ave Forbes 2871
Ph 02 6852 2666, 02 6852 2981 Fax 02 6851 1071
Lachlan SEG S9 TP2
forbes-h.school@det.nsw.edu.au

Forbes North Public School **(4100)**
Thomson & Facey Sts Forbes 2871
Ph 02 6852 2187, 02 6852 2624 Fax 02 6852 1452
Lachlan SEG P4 TP2
forbesnth-p.school@det.nsw.edu.au

Forbes Public School **(1926)**
Lachlan St Forbes 2871
(PO Box 807 Forbes 2871)
Ph 02 6852 1934, 02 6852 2152 Fax 02 6852 2534
Lachlan SEG P3 TP2
forbes-p.school@det.nsw.edu.au

Forest High School, The **(8372)**
135 Frenchs Forest Rd Frenchs Forest 2086
Ph 02 9451 5111 Fax 02 9975 3293
Middle Harbour Network SEG S9 TP1
theforest-h.school@det.nsw.edu.au

Forest Hill Public School **(1930)**
Sturt Hwy Forest Hill via Wagga Wagga 2651
Ph 02 6922 7251 Fax 02 6922 7858
Riverina East SEG P4 TP1
foresthill-p.school@det.nsw.edu.au

Forest Lodge Public School **(1932)**
Bridge Rd Forest Lodge 2037
Ph 02 9660 3530 Fax 02 9660 5045
Inner City SEG P4 TP1
forestlodg-p.school@det.nsw.edu.au

Forestville Public School **(4019)**
7 Melwood Ave Forestville 2087
Ph 02 9452 5444, 02 9452 5733 Fax 02 9975 5037
Middle Harbour Network SEG P3 TP1
forestvill-p.school@det.nsw.edu.au

Forster Public School **(1936)**
Head St Forster 2428
Ph 02 6555 6766 Fax 02 6555 6374
Lower North Coast SEG P1 TP1
forster-p.school@det.nsw.edu.au

Fort Street High School **(8504)**
Parramatta Rd Petersham 2049
Ph 02 9569 4355 Fax 02 9550 9219
Network 8 SEG S8 TP1
fortstreet-h.school@det.nsw.edu.au

Fort Street Public School **(1937)**
Observatory Hill Sydney 2000
Ph 02 9247 2963 Fax 02 9241 2397
Port Jackson SEG P5 TP1
fortstreet-p.school@det.nsw.edu.au

Fowler Road School **(5562)**
Cnr Fowler Road & Matthew Street Merrylands 2160
Ph 02 9681 4054 Fax 02 9892 2529
Granville SEG SSP4 TP1
fowlerroad-s.school@det.nsw.edu.au

Francis Greenway High School **(8439)**
Lawson Ave Beresfield 2322
Ph 02 4964 1282, 02 4964 1290 Fax 02 4964 1147
Hunter/Central Coast 4 SEG S9 TP1
francisgre-h.school@det.nsw.edu.au

Frank Partridge VC Public School **(4581)**
Centenary Pde Nambucca Heads 2448
Ph 02 6568 7100 Fax 02 6568 9147
Mid North Coast SEG P4 TP1
frankpart-p.school@det.nsw.edu.au

Franklin Public School **(4456)**
Forest St Tumut 2720
Ph 02 6947 1533 Fax 02 6947 1377
Riverina East SEG P4 TP2
franklin-p.school@det.nsw.edu.au

Frederickton Public School **(1943)**
Great North Rd Frederickton 2440
Ph 02 6566 8217 Fax 02 6566 8519
Hastings SEG P4 TP1
frederick-p.school@det.nsw.edu.au

Freemans Reach Public School **(1944)**
Kurmond Rd Freemans Reach 2756
Ph 02 4579 6146 Fax 02 4579 6528
Hawkesbury SEG P4 TP1
freemanrch-p.school@det.nsw.edu.au

Frenchs Forest Public School **(1946)**
Ann St Frenchs Forest 2086
Ph 02 9451 6353, 02 9451 6011 Fax 02 9975 3082
Middle Harbour Network SEG P4 TP1
frenchsfor-p.school@det.nsw.edu.au

G S Kidd Memorial School **(5685)**
Stock Rd Gunnedah 2380
(PO Box 316 Gunnedah 2380)
Ph 02 6742 1501 Fax 02 6742 4120
New England South SEG SSP5 TP2
gskiddmem-s.school@det.nsw.edu.au

Gadara School **(5674)**
Bundara Cres Tumut 2720
Ph 02 6947 2164 Fax 02 6947 3408
Riverina East SEG SSP5 TP2
gadara-s.school@det.nsw.edu.au

Galston High School **(8481)**
403 Galston Rd Galston 2159
Ph 02 9651 2199, 02 9651 2222 Fax 02 9651 1054
Hornsby Network SEG S9 TP1
galston-h.school@det.nsw.edu.au

Galston Public School (1952)
School Rd Galston 2159
Ph 02 9653 2062 Fax 02 9653 1980
Hornsby Network SEG P4 TP1
galston-p.school@det.nsw.edu.au

Ganmain Public School (1954)
Langham St Ganmain 2702
Ph 02 6927 6421 Fax 02 6927 6388
Riverina Central SEG P5 TP4 A 8
ganmain-p.school@det.nsw.edu.au

Garah Public School (1956)
Ashley & Benarba Sts Garah 2405
Ph 02 6754 3218 Fax 02 6754 3245
New England West SEG P6 TP6 A 4HL
garah-p.school@det.nsw.edu.au

Garden Suburb Public School (4136)
Prospect Rd Garden Suburb 2289
Ph 02 4943 4898, 02 4943 4444 Fax 02 4942 1552
Hunter/Central Coast 4 SEG P4 TP1
gardensub-p.school@det.nsw.edu.au

Gardeners Road Public School (7418)
Gardeners Rd Rosebery 2018
Ph 02 9667 2193, 02 9667 1354 Fax 02 9667 4906
Botany Bay SEG P4 TP1
gardeners-p.school@det.nsw.edu.au

Gateshead Public School (3762)
Pacific Hwy Gateshead 2290
(PO Box 4034 Gateshead 2290)
Ph 02 4943 4357, 02 4943 1518 Fax 02 4942 2589
Hunter/Central Coast 7 SEG P4 TP1
gateshead-p.school@det.nsw.edu.au

Gateshead West Public School (4385)
Coral Cres Gateshead 2290
Ph 02 4943 1670, 02 4943 5455 Fax 02 4942 2569
Hunter/Central Coast 7 SEG P5 TP1
gatesheadw-p.school@det.nsw.edu.au

George Anderson Walpole School (5572)
Kariong Juvenile CC Pacific Hwy Kariong 2250
(PO Box 7119 Kariong 2250)
Ph 02 4340 3428 Fax 02 4340 0873
Hunter/Central Coast 2 SEG SSP5 TP1
gawalpole-s.school@det.nsw.edu.au

Georges Hall Public School (3702)
Pennington Ave Georges Hall 2198
Ph 02 9707 1988, 02 9707 1387 Fax 02 9796 7861
Bankstown SEG P1 TP1
georgeshal-p.school@det.nsw.edu.au

Georges River College Hurstville Boys Campus (8813)
Kenwyn St Hurstville 2220
Ph 02 9587 3199, 02 9587 3266 Fax 02 9553 8264
Georges River SEG S9 TP1
hurstvillb-h.school@det.nsw.edu.au

Georges River College Oatley Senior Campus (8284)
Oatley Ave & Hurstville Rd Oatley 2223
(PO Box 288 Oatley 2223)
Ph 02 8567 3700 Fax 02 9570 3622
Georges River SEG S8 TP1
oatleysnr-h.school@det.nsw.edu.au

Georges River College Peakhurst Campus (8408)
Samuel & Rona Sts Peakhurst 2210
Ph 02 9153 9966, 02 9153 7495 Fax 02 9534 6346
Georges River SEG S9 TP1
peakhurst-h.school@det.nsw.edu.au

Georges River College Penshurst Girls Campus (8857)
2 Austral St Penshurst 2222
Ph 02 9580 3141, 02 9580 3614 Fax 02 9580 6373
Georges River SEG S9 TP1
penshurstg-h.school@det.nsw.edu.au

Georges River Environmental Education Centre (5430)
Central Ave Chipping Norton 2170
(c/- Chipping Norton PS Central Ave Chipping Norton 2170)
Ph 02 9755 3189 Fax 02 9755 3190
East Hills SEG EEC1 TP1
georgesriv-e.school@det.nsw.edu.au

Gerogery Public School (1969)
East Gerogery Rd Gerogery 2642
Ph 02 6026 0514 Fax 02 6026 0676
Riverina South SEG P6 TP2 A 9
gerogery-p.school@det.nsw.edu.au

Gerringong Public School (1971)
Archibald Rd Gerringong 2534
(PO Box 5 Gerringong 2534)
Ph 02 4234 1376 Fax 02 4234 2749
Shoalhaven SEG P3 TP1
gerringong-p.school@det.nsw.edu.au

Geurie Public School (1972)
Narragal St Geurie 2831
Ph 02 6887 1107 Fax 02 6887 1438
Dubbo SEG P5 TP2 A 9
geurie-p.school@det.nsw.edu.au

Ghinni Ghinni Public School (1973)
10 Ghinni Ghinni School Road Ghinni Ghinni 2430
Ph 02 6553 9341 Fax 02 6553 9275
Manning Camden Haven SEG P6 TP1 A 10
ghinnighin-p.school@det.nsw.edu.au

Gibberagong Environmental Education Centre (5714)
c/- Ku-ring-gai Chase National Park Bobbin Head 2077
(PO Box 3276 Asquith 2077)
Ph 02 9457 8245 Fax 02 9457 8182
Hornsby Network SEG EEC2 TP1
gibberagon-e.school@det.nsw.edu.au

Gilgai Public School (1978)
Woodford Pl Gilgai 2360
Ph 02 6723 1309 Fax 02 6723 1481
New England North SEG P5 TP2 A 10
gilgai-p.school@det.nsw.edu.au

Gilgandra High School (8349)
Court St Gilgandra 2827
Ph 02 6847 2276 Fax 02 6847 1288
Warrumbungle SEG S9 TP2
gilgandra-h.school@det.nsw.edu.au

Gilgandra Public School (1979)
Wrigley St Gilgandra 2827
Ph 02 6847 2043 Fax 02 6847 2304
Warrumbungle SEG P4 TP2
gilgandra-p.school@det.nsw.edu.au

Gillieston Public School (1982)
Cnr Gillieston & Ryan Roads Gillieston Heights 2321
Ph 02 4932 7542 Fax 02 4932 5950
Hunter/Central Coast 8 SEG P5 TP1
gillieston-p.school@det.nsw.edu.au

Gillwinga Public School (4421)
Hyde St South Grafton 2460
Ph 02 6642 2344, 02 6642 5223 Fax 02 6643 2051
Clarence SEG P4 TP1
gillwinga-p.school@det.nsw.edu.au

Girilambone Public School (1986)
Vega St Girilambone 2831
Ph 02 6833 1039 Fax 02 6833 1037
Bourke SEG P6 TP6 A 5HL
girilambon-p.school@det.nsw.edu.au

Girrakool School (5456)
Pacific Hwy Kariong 2250
(PO Box 7162 Kariong 2250)
Ph 02 4340 1353 Fax 02 4340 2527
Hunter/Central Coast 2 SEG SSP3 TP1
girrakool-s.school@det.nsw.edu.au

Girraween High School (8500)
Gilba Rd Girraween 2145
Ph 02 9636 7293, 02 9636 7303 Fax 02 9896 3274
The Hills SEG S9 TP1
girraween-h.school@det.nsw.edu.au

Girraween Public School (1988)
Bando Rd Girraween 2145
Ph 02 9631 3650, 02 9631 9632 Fax 02 9896 3392
Cumberland SEG P2 TP1
girraween-p.school@det.nsw.edu.au

Gladesville Public School (1990)
Victoria Rd Gladesville 2111
Ph 02 9817 2388, 02 9817 4875 Fax 02 9817 3209
Lane Cove Network SEG P3 TP1
gladesvill-p.school@det.nsw.edu.au

Gladstone Public School (1991)
13 Kinchela St Gladstone 2440
Ph 02 6567 4253 Fax 02 6567 4694
Hastings SEG P5 TP1 A 10
gladstone-p.school@det.nsw.edu.au

Glebe Public School (7419)
Derwent St Glebe 2037
Ph 02 9660 4549 Fax 02 9552 1703
Inner City SEG P5 TP1
glebe-p.school@det.nsw.edu.au

Glen Alice Public School (3903)
Beaumont St Glen Alice 2849
Ph 02 6379 7208 Fax 02 6379 7342
Warrumbungle SEG P6 TP4 A 5
glenalice-p.school@det.nsw.edu.au

Glen Innes High School (8114)
Edwards St Glen Innes 2370
Ph 02 6732 1322 Fax 02 6732 1972
New England North SEG S9 TP2
gleninnes-h.school@det.nsw.edu.au

Glen Innes Public School (2005)
Church St Glen Innes 2370
(PO Box 85 Glen Innes 2370)
Ph 02 6732 2577, 02 6732 2231 Fax 02 6732 1804
New England North SEG P2 TP2
gleninnes-p.school@det.nsw.edu.au

Glen Innes West Infants School (5116)
Coronation Ave Glen Innes 2370
Ph 02 6732 2459 Fax 02 6732 3360
New England North SEG P5 TP2
gleninnesw-p.school@det.nsw.edu.au

Glen William Public School (2020)
Glen William & Dungog Rds Clarence Town 2321
Ph 02 4996 5507 Fax 02 4996 5541
Hunter/Central Coast 10 SEG P5 TP1
glenwillia-p.school@det.nsw.edu.au

Glenbrook Public School (1994)
Woodville St Glenbrook 2773
Ph 02 4739 1288, 02 4739 1170 Fax 02 4739 8361
Blue Mountains SEG P4 TP1
glenbrook-p.school@det.nsw.edu.au

Glendale East Public School (4207)
8 Margot Ave Glendale 2285
Ph 02 4954 9551, 02 4954 0122 Fax 02 4956 6248
Hunter/Central Coast 6 SEG P4 TP1
glendalee-p.school@det.nsw.edu.au

Glendale High School (8466)
2A Oaklands St Glendale 2285
(PO Box 3067 Glendale 2285)
Ph 02 4954 9166, 02 4954 9122 Fax 02 4956 6879
Hunter/Central Coast 6 SEG S9 TP1
glendale-h.school@det.nsw.edu.au

Glendenning Public School (4608)
Armitage Drive Glendenning 2761
Ph 02 9832 8555, 02 9832 8720 Fax 02 9832 8724
Mt Druitt SEG P2 TP2
glendennin-p.school@det.nsw.edu.au

Glendon School (5704)
64 Hillsborough Rd Hillsborough 2290
Ph 02 4943 3479 Fax 02 4942 2570
Hunter/Central Coast 4 SEG SSP4 TP1
glendon-s.school@det.nsw.edu.au

Glendore Public School (4620)
Maryland Drive Maryland 2287
Ph 02 4955 6644 Fax 02 4955 6633
Hunter/Central Coast 5 SEG P3 TP1
glendore-p.school@det.nsw.edu.au

Glenfield Park School (5401)
Roy Watts Rd Glenfield 2167
Ph 02 9605 1122 Fax 02 9829 2996
Liverpool SEG SSP4 TP2
glenfldpk-s.school@det.nsw.edu.au

Glenfield Public School (2001)
Railway Pde Glenfield 2167
Ph 02 9605 1540, 02 9605 3289 Fax 02 9829 3128
Ingleburn SEG P3 TP2
glenfield-p.school@det.nsw.edu.au

Glenhaven Public School (2003)
Glenhaven Rd Glenhaven 2156
Ph 02 9634 3675, 02 9634 3855 Fax 02 9899 5911
Hills Network SEG P3 TP1
glenhaven-p.school@det.nsw.edu.au

Glenmore Park High School (8276)
Glenmore Parkway Glenmore Park 2745
Ph 02 4733 0155 Fax 02 4733 0984
Penrith Valley SEG S8 TP1
glenmorepk-h.school@det.nsw.edu.au

Glenmore Park Public School (4591)
33-41 The Lakes Drive Glenmore Park 2745
Ph 02 4733 6204 Fax 02 4733 6430
Penrith Valley SEG P2 TP1
glenmorepk-p.school@det.nsw.edu.au

Glenmore Road Public School (2009)
Glenmore Rd Paddington 2021
Ph 02 9360 4880, 02 9360 4817 Fax 02 9361 4284
Network 8 SEG P3 TP1
glenmorerd-p.school@det.nsw.edu.au

Glenorie Public School (2012)
Old Northern Rd Glenorie 2157
Ph 02 9652 1237 Fax 02 9652 2538
Hornsby Network SEG P4 TP1
glenorie-p.school@det.nsw.edu.au

Glenquarry Public School (2015)
Tourist Rd Glenquarry 2576
Ph 02 4887 1205 Fax 02 4887 1353
Goulburn/Highlands SEG P5 TP1
glenquarry-p.school@det.nsw.edu.au

Glenreagh Public School (2016)
Bridge & George Sts Glenreagh 2450
Ph 02 6649 2133 Fax 02 6649 2209
Clarence SEG P5 TP1 A 5
glenreagh-p.school@det.nsw.edu.au

Glenroi Heights Public School (4020)
Maxwell Ave Orange 2800
(PO Box 8238 Orange East 2800)
Ph 02 6362 7191 Fax 02 6362 2133
Orange SEG P4 TP1
glenroihts-p.school@det.nsw.edu.au

Glenroy Public School (4468)
Logan Rd Albury North 2640
Ph 02 6025 4044 Fax 02 6040 2344
Riverina South SEG P4 TP1
glenroy-p.school@det.nsw.edu.au

Glenvale School (5627)
Narara Creek Rd Narara 2250
Ph 02 4325 7783 Fax 02 4323 6326
Hunter/Central Coast 2 SEG SSP2 TP1
glenvale-s.school@det.nsw.edu.au

Glenwood High School (8268)
Forman Ave & Glenwood Park Dr Glenwood 2768
Ph 02 9629 9577 Fax 02 9629 2796
The Hills SEG S9 TP1
glenwood-h.school@det.nsw.edu.au

Glenwood Public School (4529)
Belmont Rd Glenfield 2167
Ph 02 9605 3260, 02 9605 6013 Fax 02 9829 3974
Ingleburn SEG P4 TP2
glenwood-p.school@det.nsw.edu.au

Glossodia Public School (2021)
Golden Valley Drive Glossodia 2756
Ph 02 4576 6099 Fax 02 4576 6079
Hawkesbury SEG P4 TP1
glossodia-p.school@det.nsw.edu.au

Gloucester High School (8371)
Ravenshaw St Gloucester 2422
Ph 02 6558 1605 Fax 02 6558 1229
Lower North Coast SEG S9 TP1
gloucester-h.school@det.nsw.edu.au

Gloucester Public School (7303)
5 Hume St Gloucester 2422
Ph 02 6558 1303 Fax 02 6558 1655
Lower North Coast SEG P4 TP1
gloucester-p.school@det.nsw.edu.au

Gol Gol Public School **(2027)**
William St Gol Gol 2738
Ph 03 5024 8401 Fax 03 5024 8627
Broken Hill SEG P4 TP6 A HL
golgol-p.school@det.nsw.edu.au

Goodooga Central School **(2033)**
Doyle St Goodooga 2831
Ph 02 6829 6257 Fax 02 6829 6294
Bourke SEG C4 TP8 A 1HL
goodooga-c.school@det.nsw.edu.au

Goolgowi Public School **(2035)**
Penney St Goolgowi 2652
Ph 02 6965 1207 Fax 02 6965 1309
Riverina North West SEG P5 TP6 A 8HL
goolgowi-p.school@det.nsw.edu.au

Goolma Public School **(2036)**
Gollan Rd Goolma 2852
Ph 02 6374 0272 Fax 02 6374 0271
Warrumbungle SEG P6 TP4 A 6
goolma-p.school@det.nsw.edu.au

Goolmangar Public School **(2037)**
Nimbin Rd Goolmangar 2480
Ph 02 6689 9262 Fax 02 6689 9334
The Wilson SEG P5 TP1 A 10
goolmangar-p.school@det.nsw.edu.au

Gooloogong Public School **(2038)**
King St Gooloogong 2805
Ph 02 6344 8307 Fax 02 6344 8349
Lachlan SEG P5 TP4 A 8
gooloogong-p.school@det.nsw.edu.au

Goonellabah Public School **(2041)**
595 Ballina Rd Goonellabah 2480
Ph 02 6624 1444, 02 6624 1349 Fax 02 6625 1072
The Wilson SEG P4 TP1
goonellaba-p.school@det.nsw.edu.au

Goonengerry Public School **(2042)**
Goonengerry Rd Goonengerry via Federal 2480
Ph 02 6684 9134 Fax 02 6684 9283
Southern Cross SEG P5 TP1 A 10
goonengerr-p.school@det.nsw.edu.au

Gordon East Public School **(3985)**
Rosedale Rd Gordon 2072
Ph 02 9498 2428, 02 9498 2011 Fax 02 9498 4173
North Shore Network SEG P4 TP1
gordoneast-p.school@det.nsw.edu.au

Gordon West Public School **(3943)**
Ryde Rd Pymble 2073
Ph 02 9498 4644 Fax 02 9498 4436
North Shore Network SEG P3 TP1
gordonwest-p.school@det.nsw.edu.au

Gorokan High School **(8515)**
Goobarabah Ave Gorokan 2263
Ph 02 4393 7000 Fax 02 4393 1157
Hunter/Central Coast 2 SEG S8 TP1
gorokan-h.school@det.nsw.edu.au

Gorokan Public School **(4517)**
Dudley St Gorokan 2263
Ph 02 4392 4642 Fax 02 4393 1698
Hunter/Central Coast 2 SEG P2 TP1
gorokan-p.school@det.nsw.edu.au

Gosford East Public School **(4218)**
York & Webb Sts Gosford East 2250
Ph 02 4325 2178, 02 4325 3418 Fax 02 4323 6930
Hunter/Central Coast 1 SEG P3 TP1
gosfordest-p.school@det.nsw.edu.au

Gosford High School **(8115)**
Racecourse Rd Gosford 2250
Ph 02 4325 2048, 02 4325 7734 Fax 02 4323 3175
Hunter/Central Coast 2 SEG S8 TP1
gosford-h.school@det.nsw.edu.au

Gosford Public School **(2049)**
Mann St Gosford 2250
(PO Box 216 Gosford 2250)
Ph 02 4325 2267, 02 4325 1192 Fax 02 4323 3468
Hunter/Central Coast 3 SEG P2 TP1
gosford-p.school@det.nsw.edu.au

Goulburn East Public School **(2054)**
Eleanor St Goulburn 2580
Ph 02 4821 4007 Fax 02 4822 1381
Goulburn/Highlands SEG P5 TP1
goulburne-p.school@det.nsw.edu.au

Goulburn High School **(8116)**
Goldsmith St Goulburn 2580
Ph 02 4821 4022 Fax 02 4822 1437
Goulburn/Highlands SEG S9 TP1
goulburn-h.school@det.nsw.edu.au

Goulburn North Public School **(2055)**
Union St Goulburn North 2580
Ph 02 4821 3838 Fax 02 4822 1357
Goulburn/Highlands SEG P4 TP1
goulburnn-p.school@det.nsw.edu.au

Goulburn Public School **(2053)**
Bourke St Goulburn 2580
Ph 02 4821 2827, 02 4821 2024 Fax 02 4822 1395
Goulburn/Highlands SEG P5 TP1
goulburn-p.school@det.nsw.edu.au

Goulburn South Public School **(2056)**
Addison St Goulburn 2580
(PO Box 845 Goulburn 2580)
Ph 02 4821 2759 Fax 02 4822 1435
Goulburn/Highlands SEG P4 TP1
goulburns-p.school@det.nsw.edu.au

Goulburn West Public School (3741)
Combermere St Goulburn 2580
Ph 02 4821 1781 Fax 02 4822 1460
Goulburn/Highlands SEG P3 TP1
goulburnw-p.school@det.nsw.edu.au

Governor Philip King Public School (4567)
Allambie Rd Edensor Park 2176
Ph 02 9610 8955 Fax 02 9823 7721
Hoxton SEG P1 TP2
govphilkin-p.school@det.nsw.edu.au

Grafton High School (8117)
Oliver & Mary Sts Grafton 2460
Ph 02 6642 3355, 02 6642 3417 Fax 02 6642 3184
Clarence SEG S8 TP1
grafton-h.school@det.nsw.edu.au

Grafton Public School (2060)
Queen St Grafton 2460
Ph 02 6642 1000 Fax 02 6643 2072
Clarence SEG P1 TP1
grafton-p.school@det.nsw.edu.au

Grahamstown Public School (4609)
Hastings Drive Raymond Terrace 2324
Ph 02 4987 6510, 02 4987 6512 Fax 02 4987 6513
Hunter/Central Coast 10 SEG P3 TP1
grahamstow-p.school@det.nsw.edu.au

Gralee School (5730)
Yanco Ave Leeton 2705
Ph 02 6953 3350 Fax 02 6953 5192
Riverina West SEG SSP5 TP4
gralee-s.school@det.nsw.edu.au

Grange Public School, The (4518)
Benham Rd Minto 2566
Ph 02 9603 3766, 02 9603 4877 Fax 02 9820 3005
Ingleburn SEG P4 TP2
thegrange-p.school@det.nsw.edu.au

Granville Boys High School (8811)
14 Mary St Granville 2142
Ph 02 9637 0489, 02 9637 0480 Fax 02 9897 2421
Granville SEG S9 TP2
granvilleb-h.school@det.nsw.edu.au

Granville East Public School (5236)
210 The Trongate Granville 2142
Ph 02 9637 1562, 02 9637 9035 Fax 02 9897 3857
Granville SEG P3 TP1
granvillee-p.school@det.nsw.edu.au

Granville Public School (2064)
Lena St Granville 2142
Ph 02 9637 1083, 02 9637 3088 Fax 02 9897 1518
Granville SEG P2 TP1
granville-p.school@det.nsw.edu.au

Granville South High School (8436)
Rowley Rd Guildford 2161
Ph 02 9892 2654, 02 9892 2706 Fax 02 9892 2764
Granville SEG S9 TP2
granvilles-h.school@det.nsw.edu.au

Granville South Public School (2066)
Woodville Rd Guildford 2161
Ph 02 9632 9388, 02 9632 9497 Fax 02 9892 2045
Granville SEG P5 TP1
granvilles-p.school@det.nsw.edu.au

Gravesend Public School (2068)
Gwydir St Gravesend 2401
Ph 02 6729 7159 Fax 02 6729 7064
New England West SEG P5 TP6 A 7L
gravesend-p.school@det.nsw.edu.au

Grays Point Public School (3914)
109 Angle Rd Grays Point 2232
Ph 02 9524 3096 Fax 02 9540 4812
Port Hacking SEG P3 TP1
grayspoint-p.school@det.nsw.edu.au

Great Lakes College Forster Campus (8534)
Cape Hawke Drive Forster 2428
(PO Box 688 Forster 2428)
Ph 02 6554 6062 Fax 02 6555 6904
Lower North Coast SEG S9 TP1
glcforster-h.school@det.nsw.edu.au

Great Lakes College Tuncurry Junior Campus (8289)
Northern Parkway Tuncurry 2428
(PO Box 140 Tuncurry 2428)
Ph 02 6555 0500 Fax 02 6557 6511
Lower North Coast SEG S9 TP1
glctuncjun-h.school@det.nsw.edu.au

Great Lakes College Tuncurry Senior Campus (8281)
Northern Parkway Tuncurry 2428
(PO Box 131 Tuncurry 2428)
Ph 02 6555 0555 Fax 02 6557 6511
Lower North Coast SEG S9 TP1
glctuncsen-h.school@det.nsw.edu.au

Green Hill Public School (2071)
Armidale & Kempsey Rds Kempsey 2440
(196 River Street, Kempsey)
Ph 02 6562 5591 Fax 02 6562 6030
Hastings SEG P5 TP1
greenhill-p.school@det.nsw.edu.au

Green Square School (5460)
237 Botany Rd Waterloo 2017
Ph 02 9319 1759 Fax 02 9310 3670
Inner City SEG SSP4 TP1
greensq-s.school@det.nsw.edu.au

Green Valley Public School (2075)
Green Valley Rd Green Valley 2168
Ph 02 9607 8710, 02 9607 9189 Fax 02 9608 4690
Hoxton SEG P2 TP4
greenvally-p.school@det.nsw.edu.au

Greenacre Public School (1123)
Waterloo Rd Greenacre 2190
Ph 02 9759 1305, 02 9759 3286 Fax 02 9740 4035
Bankstown SEG P1 TP1
greenacre-p.school@det.nsw.edu.au

Greenethorpe Public School (2070)
Main St Greenethorpe 2809
Ph 02 6343 6324 Fax 02 6343 6236
Riverina North SEG P5 TP4 A 7
greenethor-p.school@det.nsw.edu.au

Greenway Park Public School (4624)
Wyattville Drive Carnes Hill 2171
Ph 02 8783 0859 Fax 02 8783 0852
Hoxton SEG P1 TP1
greenwaypk-p.school@det.nsw.edu.au

Greenwell Point Public School (3872)
Greenwell Point Rd Greenwell Point 2540
Ph 02 4447 1379 Fax 02 4447 1550
Shoalhaven SEG P5 TP1
greenwelpt-p.school@det.nsw.edu.au

Greenwich Public School (2076)
32 Kingslangley Rd Greenwich 2065
Ph 02 9436 3217, 02 9436 3731 Fax 02 9906 6437
Lane Cove Network SEG P3 TP1
greenwich-p.school@det.nsw.edu.au

Grenfell Public School (2082)
Melyra St Grenfell 2810
Ph 02 6343 2122 Fax 02 6343 1480
Lachlan SEG P4 TP2
grenfell-p.school@det.nsw.edu.au

Gresford Public School (2083)
Durham Rd Gresford 2311
Ph 02 4938 9304 Fax 02 4938 9430
Hunter/Central Coast 10 SEG P5 TP1
gresford-p.school@det.nsw.edu.au

Greta Public School (2084)
Wyndham St Greta 2334
Ph 02 4938 7331 Fax 02 4938 7230
Hunter/Central Coast 8 SEG P4 TP1
greta-p.school@det.nsw.edu.au

Grevillia Public School (2085)
Woodenbong-Kyogle Rd Grevillia 2474
Ph 02 6636 4116 Fax 02 6636 4291
Richmond Valley SEG P6 TP1 A 6
grevillia-p.school@det.nsw.edu.au

Greystanes High School (8385)
Beresford Rd Greystanes 2145
(PO Box 125 Wentworthville 2145)
Ph 02 9631 9144 Fax 02 9896 3087
Cumberland SEG S8 TP1
greystanes-h.school@det.nsw.edu.au

Greystanes Public School (2086)
Merrylands Rd Greystanes 2145
Ph 02 9631 4000, 02 9631 4103 Fax 02 9896 3194
Cumberland SEG P3 TP1
greystanes-p.school@det.nsw.edu.au

Griffith East Public School (4268)
Wakaden St Griffith 2680
Ph 02 6962 1804, 02 6962 4409 Fax 02 6964 1450
Riverina West SEG P3 TP2
griffithe-p.school@det.nsw.edu.au

Griffith High School (8118)
Coolah St Griffith 2680
Ph 02 6962 1711 Fax 02 6964 1465
Riverina North West SEG S9 TP2
griffith-h.school@det.nsw.edu.au

Griffith North Public School (4027)
Boonah St Griffith 2680
Ph 02 6962 1043, 02 6962 1404 Fax 02 6964 1453
Riverina West SEG P2 TP2
griffithn-p.school@det.nsw.edu.au

Griffith Public School (2087)
Coolah St Griffith 2680
Ph 02 6962 3199, 02 6962 3487 Fax 02 6962 3451
Riverina North West SEG P3 TP2
griffith-p.school@det.nsw.edu.au

Grong Grong Public School (2089)
Junee St Grong Grong 2652
Ph 02 6956 2165 Fax 02 6956 2186
Riverina West SEG P6 TP4 A 9
gronggrong-p.school@det.nsw.edu.au

Grose View Public School (4483)
Grose Wold Rd Grose Vale 2753
Ph 02 4572 1386 Fax 02 4572 1833
Hawkesbury SEG P3 TP1
groseview-p.school@det.nsw.edu.au

Guildford Public School (2093)
Apia St Guildford 2161
Ph 02 9632 9675, 02 9632 8089 Fax 02 9892 1325
Granville SEG P3 TP1
guildford-p.school@det.nsw.edu.au

Guildford West Public School (4000)
Palmer St Guildford West 2161
Ph 02 9632 9942, 02 9632 7985 Fax 02 9892 1197
Granville SEG P2 TP1
guildfordw-p.school@det.nsw.edu.au

Guise Public School (4461)
Eucalyptus Drive Macquarie Fields 2564
Ph 02 9605 4397 Fax 02 9829 3975
Ingleburn SEG P4 TP4
guise-p.school@det.nsw.edu.au

Gulargambone Central School (2094)
Yalgogrin St Gulargambone 2828
Ph 02 6825 1205 Fax 02 6825 1208
Warrumbungle SEG C4 TP6 A 8HL
gulargambo-c.school@det.nsw.edu.au

Gulgong High School (8546)
Belmore St Gulgong 2852
Ph 02 6374 1201, 02 6374 1207 Fax 02 6374 2360
Warrumbungle SEG S9 TP2
gulgong-h.school@det.nsw.edu.au

Gulgong Public School (2097)
Belmore St Gulgong 2852
Ph 02 6374 1622 Fax 02 6374 1608
Warrumbungle SEG P4 TP2
gulgong-p.school@det.nsw.edu.au

Gulmarrad Public School (2099)
Broomes Head Rd Maclean 2463
Ph 02 6645 2587 Fax 02 6645 3220
Clarence SEG P4 TP1
gulmarrad-p.school@det.nsw.edu.au

Gum Flat Public School (2100)
958 Copeton Dam Rd Gum Flat 2360
Ph 02 6723 2883 Fax 02 6723 2928
New England North SEG P5 TP2 A 9
gumflat-p.school@det.nsw.edu.au

Gundagai High School (8442)
Hanley St Gundagai 2722
Ph 02 6944 1233 Fax 02 6944 2180
Riverina East SEG S9 TP2
gundagai-h.school@det.nsw.edu.au

Gundagai Public School (2102)
William St Gundagai 2722
Ph 02 6944 1811 Fax 02 6944 1966
Riverina East SEG P4 TP2
gundagai-p.school@det.nsw.edu.au

Gundagai South Public School (2103)
Luke St Gundagai South 2722
Ph 02 6944 1117 Fax 02 6944 1158
Riverina East SEG P5 TP2
gundagais-p.school@det.nsw.edu.au

Gundaroo Public School (2104)
Lot St Gundaroo 2620
Ph 02 6236 8115 Fax 02 6236 8181
Queanbeyan SEG P5 TP1 A C
gundaroo-p.school@det.nsw.edu.au

Gunnedah High School (8188)
Marquis St Gunnedah 2380
Ph 02 6742 0155 Fax 02 6742 4429
New England South SEG S9 TP2
gunnedah-h.school@det.nsw.edu.au

Gunnedah Public School (2109)
Bloomfield St Gunnedah 2380
(PO Box 222 Gunnedah 2380)
Ph 02 6742 2266 Fax 02 6742 4309
New England South SEG P4 TP2
gunnedah-p.school@det.nsw.edu.au

Gunnedah South Public School (4018)
Winder Place Gunnedah 2380
Ph 02 6742 1899, 02 6742 1448 Fax 02 6742 4217
New England South SEG P2 TP2
gunnedahs-p.school@det.nsw.edu.au

Gunning Public School (2111)
Yass St Gunning 2581
Ph 02 4845 1129 Fax 02 4845 1236
Queanbeyan SEG P5 TP2
gunning-p.school@det.nsw.edu.au

Guyra Central School (2114)
Marne St Guyra 2365
Ph 02 6779 1054 Fax 02 6779 2035
New England North SEG C2 TP2 A C
guyra-c.school@det.nsw.edu.au

Gwabegar Public School (2115)
Chauvel St Gwabegar 2356
Ph 02 6843 6252 Fax 02 6843 6287
Warrumbungle SEG P5 TP8 A 5HL
gwabegar-p.school@det.nsw.edu.au

Gwandalan Public School (4320)
Kanangra Drive Gwandalan 2259
(PO Box 5019 Gwandalan 2259)
Ph 02 4976 1318 Fax 02 4972 5189
Hunter/Central Coast 3 SEG P3 TP1
gwandalan-p.school@det.nsw.edu.au

Gwynneville Public School (3826)
10 Acacia St Gwynneville 2500
Ph 02 4229 5728 Fax 02 4226 5058
Wollongong North SE P4 TP1
gwynnevill-p.school@det.nsw.edu.au

Gymea Bay Public School (2116)
Gymea Bay Rd Gymea Bay 2227
Ph 02 9524 6852, 02 9524 4995 Fax 02 9540 2150
Port Hacking SEG P1 TP1
gymeabay-p.school@det.nsw.edu.au

Gymea High School (8386)
Hotham Rd & Princes Hwy Gymea 2227
Ph 02 9521 3244 Fax 02 9545 1540
Network 8 SEG S9 TP1
gymea-h.school@det.nsw.edu.au

Gymea North Public School (4389)
Ruby Rd Gymea 2227
Ph 02 9525 6595, 02 9524 5432 Fax 02 9540 4813
Port Hacking SEG P3 TP1
gymeanorth-p.school@det.nsw.edu.au

Haberfield Public School (2117)
Denman Ave Haberfield 2045
Ph 02 9798 8767, 02 9797 6336 Fax 02 9716 7315
Port Jackson SEG P2 TP1
haberfield-p.school@det.nsw.edu.au

Halinda School (5642)
Mimika Ave Whalan 2770
Ph 02 9675 7262, 02 9675 6158 Fax 02 9675 1716
Mt Druitt SEG SSP2 TP4
halinda-s.school@det.nsw.edu.au

Hallidays Point Public School (4611)
Diamond Beach Rd Diamond Beach 2430
Ph 02 6559 3009 Fax 02 6559 3011
Lower North Coast SEG P4 TP1
hallidays-p.school@det.nsw.edu.au

Hambledon Public School (4590)
Bali Drive Quakers Hill 2763
Ph 02 9837 3200 Fax 02 9837 2422
Nirimba SEG P2 TP2
hambledon-p.school@det.nsw.edu.au

Hamilton North Public School (3897)
Jackson St Broadmeadow 2292
Ph 02 4969 3695 Fax 02 4962 1190
Hunter/Central Coast 5 SEG P5 TP1
hamiltonn-p.school@det.nsw.edu.au

Hamilton Public School (7420)
Tudor St Hamilton 2303
Ph 02 4969 3577, 02 4969 3893 Fax 02 4961 5148
Hunter/Central Coast 4 SEG P4 TP1
hamilton-p.school@det.nsw.edu.au

Hamilton South Public School (3795)
Kenrick St Merewether 2291
Ph 02 4969 3795 Fax 02 4962 1214
Hunter/Central Coast 4 SEG P3 TP1
hamiltons-p.school@det.nsw.edu.au

Hammondville Public School (2128)
Walder Rd Hammondville 2170
Ph 02 9825 3948, 02 9825 3014 Fax 02 9825 2501
Ingleburn SEG P2 TP1
hammondvil-p.school@det.nsw.edu.au

Hampden Park Public School (4494)
Hampden Rd Lakemba 2195
Ph 02 9750 4111 Fax 02 9740 5153
Strathfield SEG P1 TP1
hampdenpk-p.school@det.nsw.edu.au

Hampton Public School (2129)
Jenolan Caves Rd Hampton 2790
Ph 02 6359 3231 Fax 02 6359 3235
Bathurst SEG P6 TP2
hampton-p.school@det.nsw.edu.au

Hannam Vale Public School (2131)
Hannam Vale Rd Hannam Vale 2443
Ph 02 6556 7636 Fax 02 6556 7672
Manning Camden Haven SEG P5 TP1 A 7
hannamvale-p.school@det.nsw.edu.au

Hannans Road Public School (4092)
Hannans Rd Riverwood 2210
Ph 02 9153 8170 Fax 02 9584 1420
East Hills SEG P4 TP1
hannansrd-p.school@det.nsw.edu.au

Hanwood Public School (2132)
School St Hanwood 2680
Ph 02 6963 0297 Fax 02 6963 0244
Riverina North West SEG P4 TP2
hanwood-p.school@det.nsw.edu.au

Harbord Public School (2133)
Oliver St Harbord 2096
Ph 02 9905 4276, 02 9905 3296 Fax 02 9905 7853
Peninsula Network SEG P1 TP1
harbord-p.school@det.nsw.edu.au

Harcourt Public School (5118)
First Ave Campsie 2194
Ph 02 9718 5929 Fax 02 9718 7234
Strathfield SEG P2 TP1
harcourt-p.school@det.nsw.edu.au

Hargraves Public School (2136)
Merinda St Hargraves 2850
Ph 02 6373 8524 Fax 02 6373 8609
Warrumbungle SEG P5 TP4 A 5
hargraves-p.school@det.nsw.edu.au

Harrington Park Public School (4628)
2 Sir Warwick Fairfax Drive Harrington Park 2567
(PO Box 3126 Narellan DC 2567)
Ph 02 4647 7116 Fax 02 4647 6617
Macarthur SEG P2 TP1
harringtnp-p.school@det.nsw.edu.au

Harrington Public School (2139)
High St Harrington 2427
Ph 02 6556 1267 Fax 02 6556 1788
Manning Camden Haven SEG P5 TP1 A 10
harrington-p.school@det.nsw.edu.au

Harrington Street Public School (4314)
Harrington St Cabramatta 2166
Ph 02 9604 4002, 02 9604 1241 Fax 02 9725 5309
Fairfield SEG P1 TP2
haringtst-p.school@det.nsw.edu.au

Harwood Island Public School (2142)
11 Morpeth St Harwood Island 2465
Ph 02 6646 4213 Fax 02 6646 4240
Clarence SEG P5 TP1
harwood-p.school@det.nsw.edu.au

Hassall Grove Public School (4598)
Buckwell Drive Hassall Grove 2761
Ph 02 9835 1756 Fax 02 9628 1618
Mt Druitt SEG P1 TP2
hassallgro-p.school@det.nsw.edu.au

Hastings Public School (4524)
Waniora Parkway Port Macquarie 2444
(PO Box 5715 Port Macquarie 2444)
Ph 02 6582 2566, 02 6582 2580 Fax 02 6582 1380
Hastings SEG P2 TP1
hastings-p.school@det.nsw.edu.au

Havenlee School (5698)
75 Judith Drive Nowra North 2541
(PO Box 3082 North Nowra 2541)
Ph 02 4421 3777 Fax 02 4423 2139
Shoalhaven SEG SSP4 TP1
havenlee-s.school@det.nsw.edu.au

Hawkesbury High School (8565)
1 Hibberts Lane Freemans Reach 2756
Ph 02 4579 6800 Fax 02 4579 6733
Hawkesbury SEG S9 TP1
hawkesbury-h.school@det.nsw.edu.au

Hay Public School (2145)
Lachlan St Hay 2711
Ph 02 6993 1270 Fax 02 6993 1779
Riverina West SEG P3 TP6 A HL
hay-p.school@det.nsw.edu.au

Hay War Memorial High School (8119)
Pine St Hay 2711
Ph 02 6993 1408 Fax 02 6993 1223
Riverina West SEG S9 TP6 A HL
haywarmem-h.school@det.nsw.edu.au

Hayes Park Public School (4399)
Kanahooka Rd Dapto 2530
Ph 02 4261 4222 Fax 02 4262 2043
Shellharbour SEG P2 TP1
hayespark-p.school@det.nsw.edu.au

Hazelbrook Public School (3854)
Great Western Hwy Hazelbrook 2779
Ph 02 4758 6120 Fax 02 4758 8888
Blue Mountains SEG P2 TP1
hazelbrook-p.school@det.nsw.edu.au

Heathcote East Public School (5272)
Mimosa St Heathcote 2233
Ph 02 9520 9034, 02 9520 5102 Fax 02 9520 0262
Woronora River SEG P4 TP1
heathcotee-p.school@det.nsw.edu.au

Heathcote High School (8246)
Wilson Pde Heathcote 2233
Ph 02 9520 9488, 02 9520 9582 Fax 02 9520 8609
Woronora River SEG S9 TP1
heathcote-h.school@det.nsw.edu.au

Heathcote Public School (2149)
Oliver St Heathcote 2233
Ph 02 9520 8759, 02 9520 9705 Fax 02 9520 4638
Woronora River SEG P4 TP1
heathcote-p.school@det.nsw.edu.au

Heaton Public School (4129)
Janet St Jesmond 2299
(PO Box 108 Jesmond 2299)
Ph 02 4952 6022 Fax 02 4952 6718
Hunter/Central Coast 5 SEG P4 TP1
heaton-p.school@det.nsw.edu.au

Hebersham Public School (4447)
Andover Cres Hebersham 2770
Ph 02 9625 9133, 02 9625 8471 Fax 02 9832 1456
Mt Druitt SEG P2 TP4
hebersham-p.school@det.nsw.edu.au

Heckenberg Public School (4336)
Jindabyne St Heckenberg 2168
Ph 02 9607 8672, 02 9607 8873 Fax 02 9607 4720
Liverpool SEG P4 TP4
heckenberg-p.school@det.nsw.edu.au

Helensburgh Public School (2153)
Lukin St Helensburgh 2508
Ph 02 4294 1332, 02 4294 1050 Fax 02 4294 3676
Wollongong North SEG P2 TP1
helensburg-p.School@det.nsw.edu.au

Henry Fulton Public School (4619)
Vincent Rd Cranebrook 2749
Ph 02 4730 4136 Fax 02 4730 4160
Penrith Valley SEG P4 TP1
henryfulto-p.school@det.nsw.edu.au

Henry Kendall High School (8467)
Faunce St Gosford 2250
Ph 02 4325 7754, 02 4325 2110 Fax 02 4323 2685
Hunter/Central Coast 3 SEG S8 TP1
henrykenda-h.school@det.nsw.edu.au

Henry Lawson High School, The (8314)
49 South Street Grenfell 2810
Ph 02 6343 1390 Fax 02 6343 2377
Lachlan SEG S9 TP2
henrylawso-h.school@det.nsw.edu.au

Henty Public School (2154)
Sladen St Henty 2658
(PO Box 109 Henty 2658)
Ph 02 6929 3184 Fax 02 6929 3057
Riverina Central SEG P5 TP2
henty-p.school@det.nsw.edu.au

Hermidale Public School (2155)
Mouramba St Hermidale 2831
Ph 02 6833 0707 Fax 02 6833 0735
Bourke SEG P6 TP6 A 4HL
hermidale-p.school@det.nsw.edu.au

Hernani Public School (2156)
Armidale-Grafton Rd Dorrigo 2453
Ph 02 6657 6155 Fax 02 6657 6182
Mid North Coast SEG P6 TP4 A 6
hernani-p.school@det.nsw.edu.au

Herons Creek Public School (2157)
Pacific Hwy Herons Creek 2443
Ph 02 6585 7125 Fax 02 6585 7004
Manning Camden Haven SEG P6 TP1 A 10
heronscrk-p.school@det.nsw.edu.au

Highlands School (5576)
Bong Bong Rd Mittagong 2575
(PO Box 64 Mittagong 2575)
Ph 02 4872 3088 Fax 02 4872 3800
Goulburn/Highlands SEG SSP5 TP1
highlands-s.school@det.nsw.edu.au

Hill End Public School (2161)
Tambaroora St Hill End 2850
Ph 02 6337 8265 Fax 02 6337 8307
Warrumbungle SEG P6 TP4 A 2
hillend-p.school@det.nsw.edu.au

Hill Top Public School (2166)
Linda St Hill Top 2575
Ph 02 4889 8227 Fax 02 4889 8224
Goulburn/Highlands SEG P4 TP1
hilltop-p.school@det.nsw.edu.au

Hills School, The (5688)
Mary St Northmead 2152
Ph 02 9639 8448, 02 9639 7334 Fax 02 9686 3471
The Hills SEG SSP2 TP1
thehills-s.school@det.nsw.edu.au

Hills Sports High School, The (8412)
Best Rd Seven Hills 2147
Ph 02 9622 7300, 02 9622 7844 Fax 02 9831 6190
Nirimba SEG S9 TP2
hillssport-h.school@det.nsw.edu.au

Hillsborough Public School (4318)
Waratah Ave Charlestown 2290
Ph 02 4943 5695 Fax 02 4942 2579
Hunter/Central Coast 4 SEG P4 TP1
hillsboro-p.school@det.nsw.edu.au

Hillside Public School (2164)
Cattai Ridge Rd Glenorie 2157
Ph 02 9652 1459 Fax 02 9652 2580
Hornsby Network SEG P5 TP1
hillside-p.school@det.nsw.edu.au

Hillston Central School (2165)
62-80 Moore St Hillston 2675
Ph 02 6967 2277 Fax 02 6967 2385
Riverina North West SEG C3 TP6 A 10HL
hillston-c.school@det.nsw.edu.au

Hilltop Road Public School (3997)
Hilltop Rd Merrylands 2160
Ph 02 9635 7722, 02 9635 5310 Fax 02 9687 1421
Cumberland SEG P2 TP1
hilltoprd-p.school@det.nsw.edu.au

Hillvue Public School (4437)
Hillvue Rd Tamworth 2340
Ph 02 6765 7446, 02 6765 7459 Fax 02 6762 1215
New England South SEG P3 TP1
hillvue-p.school@det.nsw.edu.au

Hinchinbrook Public School (4613)
Cnr Hinchinbrook Dr & Keppel Circuit Hinchinbrook 2168
Ph 02 9826 7344, 02 9826 7855 Fax 02 9826 7894
Hoxton SEG P2 TP2
hinchinbro-p.school@det.nsw.edu.au

Hinton Public School (2167)
Paterson St Hinton 2321
Ph 02 4930 5266 Fax 02 4930 5502
Hunter/Central Coast 9 SEG P5 TP1
hinton-p.school@det.nsw.edu.au

Hobartville Public School (4452)
Valder Ave Hobartville 2753
Ph 02 4578 1110, 02 4578 2268 Fax 02 4588 5882
Hawkesbury SEG P2 TP1
hobartvill-p.school@det.nsw.edu.au

Holbrook Public School (2170)
Albury St Holbrook 2644
(PO Box 42 Holbrook 2644)
Ph 02 6036 2021 Fax 02 6036 2901
Riverina Central SEG P4 TP2
holbrook-p.school@det.nsw.edu.au

Holgate Public School (2171)
RMB 5255 Wattle Tree Rd Holgate 2250
Ph 02 4367 7444 Fax 02 4365 3088
Hunter/Central Coast 1 SEG P4 TP1
holgate-p.school@det.nsw.edu.au

Holman Place School (5736)
8 Holman Place Cowra 2794
Ph 02 6342 2301 Fax 02 6341 1265
Lachlan SEG SSP5 TP1
holmanplac-s.school@det.nsw.edu.au

Holmwood Public School (2172)
Cowra-Carcoar Rd Cowra 2794
Ph 02 6342 2172 Fax 02 6341 1247
Lachlan SEG P5 TP2
holmwood-p.school@det.nsw.edu.au

Holroyd High School (8424)
7 Cumberland Rd Greystanes 2145
Ph 02 9631 9410, 02 9631 9969 Fax 02 9896 3074
Granville SEG S9 TP1
holroyd-h.school@det.nsw.edu.au

Holroyd School (5633)
Willara Ave Merrylands 2160
Ph 02 9637 5174, 02 9637 1219 Fax 02 9897 2235
Granville SEG SSP1 TP2
holroyd-s.school@det.nsw.edu.au

Holsworthy High School (8564)
Huon Cres Holsworthy 2173
Ph 02 9825 2888 Fax 02 9825 1082
Ingleburn SEG S9 TP1
holsworthy-h.school@det.nsw.edu.au

Holsworthy Public School (4288)
Infantry Pde Holsworthy 2173
Ph 02 9825 1479, 02 9825 1693 Fax 02 9825 2860
Ingleburn SEG P2 TP1
holsworthy-p.school@det.nsw.edu.au

Homebush Boys High School (8151)
Bridge Rd Homebush 2140
Ph 02 9764 3611, 02 9764 3241 Fax 02 9746 3614
Strathfield SEG S8 TP1
homebushbo-h.school@det.nsw.edu.au

Homebush Public School (2173)
Rochester St Homebush 2140
Ph 02 9746 9171, 02 9764 4472 Fax 02 9746 3516
Strathfield SEG P2 TP1
homebush-p.school@det.nsw.edu.au

Homebush West Public School (5251)
Exeter Rd Homebush West 2140
Ph 02 9746 9304 Fax 02 9746 2148
Strathfield SEG P3 TP1
homebushw-p.school@det.nsw.edu.au

HopeTown School (5755)
177 Pollock Ave Wyong 2259
Ph 02 4353 2522 Fax 02 4351 2381
Hunter/Central Coast 2 SEG SSP4 TP1
hopetown-s.school@det.nsw.edu.au

Hornsby Girls High School (8120)
Edgeworth David Ave Hornsby 2077
Ph 02 9476 5711 Fax 02 9482 2525
Hornsby Network SEG S9 TP1
hornsbygir-h.school@det.nsw.edu.au

Hornsby Heights Public School (4274)
Somerville Rd Hornsby 2077
Ph 02 9476 5133 Fax 02 9482 2526
Hornsby Network SEG P3 TP1
hornsbyhts-p.school@det.nsw.edu.au

Hornsby North Public School (4365)
Ida St Hornsby 2077
(PO Box 516 Hornsby 1630)
Ph 02 9987 4605, 02 9476 6410 Fax 02 9482 2527
Hornsby Network SEG P2 TP1
hornsbynth-p.school@det.nsw.edu.au

Hornsby South Public School (5191)
Clarke Rd Hornsby 2077
Ph 02 9489 2410 Fax 02 9489 2495
Hornsby Network SEG P3 TP1
hornsbysth-p.school@det.nsw.edu.au

Horsley Park Public School (2182)
The Horsley Drive Horsley Park 2164
Ph 02 9620 1301, 02 9620 2316 Fax 02 9620 1791
Hoxton SEG P5 TP1
horsleypk-p.school@det.nsw.edu.au

Howlong Public School (2186)
Hawkins St Howlong 2643
Ph 02 6026 5206 Fax 02 6026 5900
Riverina South SEG P4 TP2 A 10
howlong-p.school@det.nsw.edu.au

Hoxton Park High School (8485)
40 Wilson Rd Hinchinbrook 2168
Ph 02 9607 4222, 02 9607 4055 Fax 02 9607 4836
Hoxton SEG S9 TP2
hoxtonpark-h.school@det.nsw.edu.au

Hoxton Park Public School (2187)
Pacific Palms Circuit Hoxton Park 2171
(PO Box 50 Hoxton Park 2171)
Ph 02 9607 0005, 02 9608 2820 Fax 02 9608 4937
Hoxton SEG P2 TP2
hoxtonpark-p.school@det.nsw.edu.au

Hume Public School (4407)
Parklands Cres Lavington 2641
Ph 02 6025 1850, 02 6025 3086 Fax 02 6025 4052
Riverina South SEG P4 TP1
hume-p.school@det.nsw.edu.au

Humula Public School (2188)
School St Humula 2652
Ph 02 6928 9254 Fax 02 6928 9219
Riverina East SEG P6 TP4 A 6
humula-p.school@det.nsw.edu.au

Hunter Orthopaedic School, The (5511)
Harriet St Waratah 2298
Ph 02 4985 3122, 02 4985 3158 Fax 02 4985 3121
Hunter/Central Coast 5 SEG SSP4 TP1
hunterorth-s.school@det.nsw.edu.au

Hunter River Community School (5687)
Cnr George & Lindesay Sts East Maitland 2323
(PO Box 615 East Maitland 2323)
Ph 02 4933 5844, 02 4933 5968 Fax 02 4933 5557
Hunter/Central Coast 4 SEG SSP4 TP1
hunterrivc-s.school@det.nsw.edu.au

Hunter River High School (8219)
Elkin Ave Heatherbrae 2324
Ph 02 4987 2306, 02 4987 2307 Fax 02 4987 4076
Hunter/Central Coast 10 SEG S9 TP1
hunterriv-h.school@det.nsw.edu.au

Hunter School of Performing Arts (8819)
Lambton Rd Broadmeadow 2292
Ph 02 4952 3355, 02 4952 3297 Fax 02 4956 2428
Hunter/Central Coast 4 SEG C8 TP1
huntperfor-h.school@det.nsw.edu.au

Hunter Sports High School (8233)
Pacific Hwy Gateshead 2290
Ph 02 4943 5755 Fax 02 4942 2565
Hunter/Central Coast 7 SEG S8 TP1
hunterspt-h.school@det.nsw.edu.au

Hunters Hill High School (8207)
Reiby Rd Hunters Hill 2110
Ph 02 9817 4785, 02 9817 4565 Fax 02 9816 3297
Lane Cove Network SEG S9 TP1
huntershd-h.school@det.nsw.edu.au

Hunters Hill Public School (2189)
17 Alexandra St Hunters Hill 2110
(PO Box 52 Hunters Hill 2110)
Ph 02 9816 4404, 02 9817 3406 Fax 02 9879 4049
Lane Cove Network SEG P3 TP1
huntershil-p.school@det.nsw.edu.au

Huntingdon Public School (2190)
2876 Oxley Highway Wauchope 2446
Ph 02 6585 6144 Fax 02 6585 6469
Hastings SEG P5 TP1 A 10
huntingdon-p.school@det.nsw.edu.au

Hurlstone Agricultural High School (8121)
Roy Watts Rd Glenfield 2167
Ph 02 9829 9222 Fax 02 9829 2026
Hoxton SEG S8 TP1
hurlstone-h.school@det.nsw.edu.au

Hurstville Grove Infants School (5195)
81 Landsdowne St Penshurst 2222
Ph 02 9580 5361 Fax 02 9580 6375
Georges River SEG P5 TP1
hurstvilgr-p.school@det.nsw.edu.au

Hurstville Public School (2197)
Forest Rd Hurstville 2220
Ph 02 9587 3963, 02 9587 6593 Fax 02 9553 8029
Georges River SEG P1 TP1
hurstville-p.school@det.nsw.edu.au

Hurstville South Public School (2198)
Maher St Hurstville 2220
Ph 02 9580 2695, 02 9580 5835 Fax 02 9580 8984
Georges River SEG P3 TP1
hurstvills-p.school@det.nsw.edu.au

Huskisson Public School (2199)
Sydney St Huskisson 2540
Ph 02 4441 5074 Fax 02 4441 6220
Batemans Bay SEG P4 TP1
huskisson-p.school@det.nsw.edu.au

Ilford Public School (2201)
Castlereagh Hwy Ilford 2850
Ph 02 6358 8507 Fax 02 6358 8524
Warrumbungle SEG P5 TP4 A 9
ilford-p.school@det.nsw.edu.au

Illabo Public School (2203)
Layton St Illabo 2591
Ph 02 6924 5475 Fax 02 6924 5432
Riverina Central SEG P5 TP2 A 8
illabo-p.school@det.nsw.edu.au

Illaroo Road Public School (4246)
103 Illaroo Rd Nowra 2541
(PO Box 3346 North Nowra)
Ph 02 4421 0422 Fax 02 4423 2728
Shoalhaven SEG P2 TP1
illaroo-p.school@det.nsw.edu.au

Illawarra Environmental Education Centre (5743)
Killalea State Park, Killalea Drive Dunmore 2529
(PO Box 4124 Shellharbour 2529)
Ph 02 4237 6100 Fax 02 4237 6122
Shellharbour SEG EEC2 TP1
illawarra-e.school@det.nsw.edu.au

Illawarra Hospital School (5551)
Crown St West Wollongong 2500
Ph 02 4222 5218 Fax 02 4226 5105
Wollongong SEG SSP4 TP1
illawarhos-s.school@det.nsw.edu.au

Illawarra Senior College (8373)
Military Rd Port Kembla 2505
(PO Box 211 Port Kembla 2505)
Ph 02 4274 0621, 02 4274 0622 Fax 02 4276 2835
Wollongong SEG S9 TP1
illawarra-h.school@det.nsw.edu.au

Illawarra Sports High School (8205)
Gura St Berkeley 2506
Ph 02 4271 1099 Fax 02 4271 3511
Wollongong SEG S8 TP1
illawaspor-h.school@det.nsw.edu.au

Illawong Public School (4077)
Fowler Rd Illawong 2234
Ph 02 9543 1604 Fax 02 9543 7354
Woronora River SEG P4 TP1
illawong-p.school@det.nsw.edu.au

Iluka Public School (2204)
Charles St Iluka 2466
Ph 02 6646 6149 Fax 02 6646 6783
Clarence SEG P5 TP1 A 8
iluka-p.school@det.nsw.edu.au

Induna School (5756)
57 Swallow Rd South Grafton 2460
(PO Box 642 Grafton 2460)
Ph 02 6643 0008 Fax 02 6643 0020
Clarence SEG SSP5 TP1
induna-s.school@det.nsw.edu.au

Ingleburn High School (8262)
Oxford Rd Ingleburn 2565
Ph 02 9605 6165, 02 9605 1509 Fax 02 9829 2812
Ingleburn SEG S9 TP2
ingleburn-h.school@det.nsw.edu.au

Ingleburn North Public School (4311)
Macdonald Rd Ingleburn 2565
Ph 02 9605 2459 Fax 02 9829 3967
Ingleburn SEG P5 TP2
ingleburnn-p.school@det.nsw.edu.au

Ingleburn Public School (2206)
Oxford Rd Ingleburn 2565
Ph 02 9605 1423, 02 9605 1635 Fax 02 9829 3968
Ingleburn SEG P2 TP2
ingleburn-p.school@det.nsw.edu.au

Inverell High School (8122)
Brae St Inverell 2360
Ph 02 6722 3777, 02 6722 3473 Fax 02 6722 5829
New England North SEG S9 TP2
inverell-h.school@det.nsw.edu.au

Inverell Public School (2209)
Henderson St Inverell 2360
Ph 02 6722 3072 Fax 02 6722 4324
New England North SEG P3 TP2
inverell-p.school@det.nsw.edu.au

Iona Public School (2211)
Paterson Rd Iona 2321
Ph 02 4930 1415 Fax 02 4930 1807
Hunter/Central Coast 9 SEG P5 TP1
iona-p.school@det.nsw.edu.au

Ironbark Ridge Public School (4638)
Cnr Withers Rd & Ironbark Ridge Rd Rouse Hill 2155
Ph 02 8814 5687 Fax 02 8814 5698
The Hills SEG P4 TP1
ironbarkrg-p.school@det.nsw.edu.au

Irrawang High School (8562)
Mount Hall Rd Raymond Terrace North 2324
Ph 02 4987 4686, 02 4987 4687 Fax 02 4983 1027
Hunter/Central Coast 10 SEG S8 TP1
irrawang-h.school@det.nsw.edu.au

Irrawang Public School (4372)
Geer St Raymond Terrace 2324
Ph 02 4987 2403, 02 4987 2600 Fax 02 4987 4063
Hunter/Central Coast 10 SEG P3 TP1
irrawang-p.school@det.nsw.edu.au

Islington Public School (2212)
Hubbard St Islington 2296
Ph 02 4969 3903 Fax 02 4961 1636
Hunter/Central Coast 5 SEG P5 TP1
islington-p.school@det.nsw.edu.au

Ivanhoe Central School (2213)
Columbus St Ivanhoe 2878
Ph 02 6995 1108 Fax 02 6995 1290
Broken Hill SEG C4 TP8 A 2HL
ivanhoe-c.school@det.nsw.edu.au

J J Cahill Memorial High School (8263)
Sutherland St Rosebery 2018
Ph 02 9669 5118, 02 9667 3062 Fax 02 9667 4902
Network 8 SEG S9 TP1
jjcahill-h.school@det.nsw.edu.au

Jamberoo Public School (2218)
Churchill St Jamberoo 2533
Ph 02 4236 0173 Fax 02 4236 0633
Shoalhaven SEG P4 TP1
jamberoo-p.school@det.nsw.edu.au

James Busby High School (8460)
Brolga Cresc Green Valley 2168
(PO Box 1616 Green Valley 2168)
Ph 02 9607 7766, 02 9607 7222 Fax 02 9607 2277
Hoxton SEG S8 TP4
jamesbusby-h.school@det.nsw.edu.au

James Cook Boys High School (8882)
Princes Hwy Kogarah 2217
Ph 02 9587 1770, 02 9587 1699 Fax 02 9553 8242
Georges River SEG S9 TP1
jamescookb-h.school@det.nsw.edu.au

James Erskine Public School (4579)
Peppertree Drive Erskine Park 2759
Ph 02 9834 3009 Fax 02 9834 3865
Minchinbury SEG P2 TP2
jameserski-p.school@det.nsw.edu.au

James Fallon High School (8266)
Fallon St Albury North 2640
(PO Box 465 Lavington 2641)
Ph 02 6025 1688 Fax 02 6040 1993
Riverina South SEG S9 TP1
jamesfallo-h.school@det.nsw.edu.au

James Meehan High School (8497)
Harold St Macquarie Fields 2564
Ph 02 9605 4385, 02 9605 4395 Fax 02 9829 3976
Ingleburn SEG S9 TP4
jamesmeeha-h.school@det.nsw.edu.au

James Ruse Agricultural High School (8235)
Felton Rd Carlingford 2118
Ph 02 9871 7126, 02 9871 4516 Fax 02 9871 3874
Cumberland SEG S9 TP1
jamesruse-h.school@det.nsw.edu.au

Jamison High School (8559)
222 Evans St Penrith South 2750
Ph 02 4731 6150 Fax 02 4721 2502
Penrith Valley SEG S8 TP1
jamison-h.school@det.nsw.edu.au

Jamisontown Public School **(4544)**
Thurwood Ave Penrith South 2750
Ph 02 4733 2200, 02 4733 2277 Fax 02 4733 1555
Penrith Valley SEG P3 TP1
jamisonton-p.school@det.nsw.edu.au

Jannali East Public School **(4004)**
Box Rd Jannali 2226
Ph 02 9528 8101 Fax 02 9528 2207
Woronora River SEG P4 TP1
jannalie-p.school@det.nsw.edu.au

Jannali High School, The **(8852)**
Sutherland Rd Jannali 2226
Ph 02 9521 2805, 02 9521 7166 Fax 02 9545 1175
Woronora River SEG S9 TP1
jannali-h.school@det.nsw.edu.au

Jannali Public School **(3829)**
Sutherland Rd Jannali 2226
Ph 02 9528 9315 Fax 02 9528 3607
Woronora River SEG P5 TP1
jannali-p.school@det.nsw.edu.au

Jasper Road Public School **(4382)**
Jasper Rd Baulkham Hills 2153
Ph 02 9639 6801, 02 9639 6688 Fax 02 9639 4487
The Hills SEG P2 TP1
jasperroad-p.school@det.nsw.edu.au

Jennings Public School **(2223)**
High St Jennings via Wallangarra 4383
Ph 07 4684 3273 Fax 07 4684 3354
New England North SEG P6 TP4 A 9
jennings-p.school@det.nsw.edu.au

Jerangle Public School **(2225)**
Braidwood-Cooma Rd Jerangle 2630
Ph 02 6454 3127 Fax 02 6454 3177
Sapphire Coast/Monaro SEG P6 TP4 A 3C
jerangle-p.school@det.nsw.edu.au

Jerilderie Public School **(2226)**
31 Bolton St Jerilderie 2716
Ph 03 5886 1331 Fax 03 5886 1615
Riverina South West SEG P5 TP4 A 10
jerilderie-p.school@det.nsw.edu.au

Jerrabomberra Public School **(4633)**
Coachwood Ave Jerrabomberra 2619
(PO Box 319 Jerrabomberra 2619)
Ph 02 6299 8860 Fax 02 6299 8863
Queanbeyan SEG P1 TP1 A C
jerra-p.school@det.nsw.edu.au

Jerrys Plains Public School **(2231)**
Doyle St Jerrys Plains 2330
Ph 02 6576 4018, 02 6576 4044 Fax 02 6576 4142
Hunter/Central Coast 8 SEG P5 TP1
jerrysplan-p.school@det.nsw.edu.au

Jesmond Public School **(2234)**
Ralph St Jesmond 2299
Ph 02 4957 2605 Fax 02 4956 2451
Hunter/Central Coast 5 SEG P4 TP1
jesmond-p.school@det.nsw.edu.au

Jewells Primary School **(4469)**
Lepton Pde Jewells 2280
Ph 02 4948 7300, 02 4948 7984 Fax 02 4947 1316
Hunter/Central Coast 7 SEG P2 TP1
jewells-p.school@det.nsw.edu.au

Jiggi Public School **(2235)**
Jiggi-Nimbin Rd Jiggi 2480
Ph 02 6688 8221 Fax 02 6688 8360
The Wilson SEG P5 TP1 A 8
jiggi-p.school@det.nsw.edu.au

Jilliby Public School **(2236)**
Jilliby Rd Wyong 2259
Ph 02 4355 1240 Fax 02 4355 1401
Hunter/Central Coast 2 SEG P5 TP1
jilliby-p.school@det.nsw.edu.au

Jindabyne Central School **(2237)**
Park Rd Jindabyne 2627
(PO Box 40 Jindabyne 2627)
Ph 02 6456 2346 Fax 02 6456 1082
Sapphire Coast/Monaro SEG C2 TP2 A 10C
jindabyne-c.school@det.nsw.edu.au

Jindera Public School **(2239)**
Dight Street Jindera 2642
Ph 02 6026 3280 Fax 02 6026 3642
Riverina South SEG P4 TP2 A 10
jindera-p.school@det.nsw.edu.au

John Brotchie Nursery School **(5423)**
1361 Botany Rd Botany 2019
Ph 02 9316 8825 Fax 02 9316 4067
Botany Bay SEG 3* TP1
johnbrotch-p.school@det.nsw.edu.au

John Edmondson High School **(8290)**
Horningsea Park Dr Horningsea Park 2171
Ph 02 9825 9815 Fax 02 9825 9857
Hoxton SEG S9 TP1
jedmondson-h.school@det.nsw.edu.au

John Hunter Hospital School **(5558)**
Ward H1 Lookout Rd New Lambton Heights 2305
(Locked Bag 1 Hunter Regional Mail Centre 2310)
Ph 02 4921 3378 Fax 02 4921 3378
Hunter/Central Coast 4 SEG SSP4 TP1
johnhunter-s.school@det.nsw.edu.au

John Palmer Public School **(4648)**
Lot 1077 The Ponds Boulevarde The Ponds 2769
Ph 02 8882 9480 Fax 02 8882 9479
The Hills SEG P4 TP1
johnpalmer-p.school@det.nsw.edu.au

John Purchase Public School (4572)
Purchase Rd Cherrybrook 2126
Ph 02 9875 3100 Fax 02 9875 3762
Hills Network SEG P2 TP1
johnpurch-p.school@det.nsw.edu.au

John Richardson School (5450)
Staff Rd Unanderra 2526
(PO Box 201 Unanderra 2526)
Ph 02 4271 8973, 02 4271 8972 Fax 02 4271 5040
Wollongong SEG SSP5 TP1
johnrichar-s.school@det.nsw.edu.au

John Warby Public School (4479)
Deans Rd Airds 2560
Ph 02 4625 8140, 02 4625 8141 Fax 02 4628 1637
Campbelltown SEG P3 TP4
johnwarby-p.school@det.nsw.edu.au

Johns River Public School (2243)
Station St Johns River 2443
Ph 02 6556 5130 Fax 02 6556 5311
Manning Camden Haven SEG P6 TP1 A 8
johnsriver-p.school@det.nsw.edu.au

Jugiong Public School (2245)
Flyde St Jugiong 2727
Ph 02 6945 4210 Fax 02 6945 4388
Riverina East SEG P6 TP2 A 5
jugiong-p.school@det.nsw.edu.au

Junction Public School, The (2246)
Union St Merewether 2291
(PO Box 132 Merewether 2291)
Ph 02 4963 1343, 02 4963 5721 Fax 02 4963 3501
Hunter/Central Coast 4 SEG P2 TP1
thejunctio-p.school@det.nsw.edu.au

Junee High School (8179)
Waratah St Junee 2663
(PO Box 141 Junee 2663)
Ph 02 6924 1666 Fax 02 6924 1798
Riverina Central SEG S9 TP2
junee-h.school@det.nsw.edu.au

Junee North Public School (2248)
Queen St Junee 2663
Ph 02 6924 1839 Fax 02 6924 1794
Riverina Central SEG P4 TP2
juneenorth-p.school@det.nsw.edu.au

Junee Public School (2247)
Lorne St Junee 2663
Ph 02 6924 1902 Fax 02 6924 2540
Riverina Central SEG P4 TP2
junee-p.school@det.nsw.edu.au

Kadina High School (8520)
Kadina St Goonellabah 2480
Ph 02 6624 3133, 02 6624 3308 Fax 02 6625 2137
The Wilson SEG S9 TP1
kadina-h.school@det.nsw.edu.au

Kahibah Public School (3874)
Frith St Kahibah 2290
(PO Box 5042 Kahibah 2290)
Ph 02 4943 4501, 02 4942 3182 Fax 02 4942 2590
Hunter/Central Coast 7 SEG P4 TP1
kahibah-p.school@det.nsw.edu.au

Kalinda School (5699)
Coolah St Griffith 2680
Ph 02 6962 3271 Fax 02 6964 1464
Riverina North West SEG SSP4 TP2
kalinda-s.school@det.nsw.edu.au

Kambora Public School (4515)
Woolrych Ave Davidson 2085
Ph 02 9451 8028, 02 9451 2417 Fax 02 9975 5049
Middle Harbour Network SEG P4 TP1
kambora-p.school@det.nsw.edu.au

Kanahooka High School (8489)
Thirroul & Roberts Sts Kanahooka 2530
Ph 02 4261 4011 Fax 02 4261 4700
Shellharbour SEG S9 TP1
kanahooka-h.school@det.nsw.edu.au

Kandeer School (5744)
412 Fallon St Albury North 2640
Ph 02 6025 2832 Fax 02 6040 1143
Riverina South SEG SSP5 TP1
kandeer-s.school@det.nsw.edu.au

Kandos High School (8318)
Fleming St Kandos 2848
Ph 02 6379 4103 Fax 02 6379 4818
Warrumbungle SEG S9 TP4
kandos-h.school@det.nsw.edu.au

Kandos Public School (2254)
Dangar St Kandos 2848
Ph 02 6379 4201 Fax 02 6379 4807
Warrumbungle SEG P4 TP4
kandos-p.school@det.nsw.edu.au

Kangaloon Public School (2255)
Robertson St Kangaloon 2576
Ph 02 4888 2215 Fax 02 4888 2372
Goulburn/Highlands SEG P6 TP1
kangaloon-p.school@det.nsw.edu.au

Kangaroo Valley Public School (2256)
Moss Vale-Nowra Rd Kangaroo Valley 2577
Ph 02 4465 1182 Fax 02 4465 1207
Shoalhaven SEG P5 TP1
kangaroova-p.school@det.nsw.edu.au

Kanwal Public School (2259)
Craigie Ave Kanwal 2259
Ph 02 4392 3477 Fax 02 4393 1621
Hunter/Central Coast 2 SEG P1 TP1
kanwal-p.school@det.nsw.edu.au

Kapooka Public School **(3923)**
Sturt Ave Kapooka 2661
Ph 02 6931 2703 Fax 02 6931 4342
Riverina North SEG P5 TP1
kapooka-p.school@det.nsw.edu.au

Karabar High School **(8524)**
Donald Rd Queanbeyan 2620
Ph 02 6298 4333, 02 6298 4300 Fax 02 6299 3035
Queanbeyan SEG S8 TP1 A C
karabar-h.school@det.nsw.edu.au

Karangi Public School **(2260)**
Coffs Harbour-Coramba Rd Karangi 2450
Ph 02 6653 8284 Fax 02 6653 8478
Coffs Harbour SEG P5 TP1 A 10
karangi-p.school@det.nsw.edu.au

Kareela Public School **(4488)**
Freya St Kareela 2232
Ph 02 9528 5444 Fax 02 9528 3484
Woronora River SEG P3 TP1
kareela-p.school@det.nsw.edu.au

Kariong Public School **(4580)**
Langford Drive Kariong 2250
Ph 02 4340 1885 Fax 02 4340 2523
Hunter/Central Coast 3 SEG P1 TP1
kariong-p.school@det.nsw.edu.au

Karningul School **(5581)**
1A Auburn Rd Regents Park 2143
Ph 02 9738 8511 Fax 02 9738 9554
Bankstown SEG SSP5 TP1
karningul-s.school@det.nsw.edu.au

Karonga School **(5670)**
Karonga Close (via Dent St) Epping 2121
Ph 02 9868 1922 Fax 02 9869 1637
Hills Network SEG SSP3 TP1
karonga-s.school@det.nsw.edu.au

Karuah Public School **(2263)**
18 Bundabah St Karuah 2324
Ph 02 4997 5341 Fax 02 4997 5679
Hunter/Central Coast 10 SEG P5 TP1
karuah-p.school@det.nsw.edu.au

Katoomba High School **(8150)**
Martin St Katoomba 2780
Ph 02 4782 2622, 02 4782 2206 Fax 02 4782 5976
Blue Mountains SEG S9 TP1
katoomba-h.school@det.nsw.edu.au

Katoomba North Public School **(3987)**
Barton St Katoomba 2780
Ph 02 4782 2743 Fax 02 4782 3871
Blue Mountains SEG P4 TP1
katoomban-p.school@det.nsw.edu.au

Katoomba Public School **(4546)**
Merriwa St Katoomba 2780
Ph 02 4782 1226, 02 4782 1328 Fax 02 4782 2996
Blue Mountains SEG P4 TP1
katoomba-p.school@det.nsw.edu.au

Kearns Public School **(4593)**
St Lawrence Ave Kearns 2558
Ph 02 9820 7039 Fax 02 9820 7093
Campbelltown SEG P4 TP1
kearns-p.school@det.nsw.edu.au

Kearsley Public School **(2267)**
10 Caledonia St Kearsley 2325
(PO Box 566 Cessnock 2325)
Ph 02 4990 1705 Fax 02 4991 1018
Hunter/Central Coast 9 SEG P5 TP1
kearsley-p.school@det.nsw.edu.au

Kegworth Public School **(2270)**
60 Tebbutt St Leichhardt 2040
Ph 02 9569 7320 Fax 02 9560 6949
Port Jackson SEG P3 TP1
kegworth-p.school@det.nsw.edu.au

Keira High School **(8541)**
Lysaght St Fairy Meadow 2519
Ph 02 4229 4644 Fax 02 4226 9983
Wollongong North SEG S9 TP1
keira-h.school@det.nsw.edu.au

Keiraville Public School **(2271)**
Gipps Rd Keiraville 2500
(PO Box 54 Keiraville 2500)
Ph 02 4229 4117 Fax 02 4226 5084
Wollongong North SEG P4 TP1
keiraville-p.school@det.nsw.edu.au

Kellys Plains Public School **(2273)**
Kellys Plains Rd Armidale 2350
Ph 02 6775 1253 Fax 02 6775 1365
New England Central SEG P5 TP1 A 10C
kellysplan-p.school@det.nsw.edu.au

Kellyville High School **(8477)**
York Rd Kellyville 2155
Ph 02 8824 5955 Fax 02 8824 9755
The Hills SEG S9 TP1
kellyville-h.school@det.nsw.edu.au

Kellyville Public School **(2274)**
Windsor Rd Kellyville 2155
Ph 02 9629 1279, 02 9629 1808 Fax 02 9629 3924
The Hills SEG P2 TP1
kellyville-p.school@det.nsw.edu.au

Kellyville Ridge Public School **(4639)**
Cnr Singleton Ave & Greenwich St Kellyville Ridge 2155
Ph 02 8883 0480 Fax 02 8883 0482
The Hills SEG P2 TP1
kellyridge-p.school@det.nsw.edu.au

Kelso Public School (2275)
19 Gilmour Street Kelso 2795
Ph 02 6331 1577 Fax 02 6332 1983
Bathurst SEG P4 TP1 A C
kelso-p.school@det.nsw.edu.au

Kemblawarra Public School (4083)
Shellharbour Rd Port Kembla 2505
Ph 02 4274 2024 Fax 02 4276 2871
Wollongong SEG P5 TP1
kemblawarr-p.school@det.nsw.edu.au

Kemps Creek Public School (3615)
100 Cross St Kemps Creek 2171
Ph 02 9826 1143 Fax 02 9826 1202
Hoxton SEG P4 TP2
kempscreek-p.school@det.nsw.edu.au

Kempsey East Public School (2278)
Innes St Kempsey 2440
Ph 02 6562 4927 Fax 02 6562 8979
Hastings SEG P4 TP1
kempseyest-p.school@det.nsw.edu.au

Kempsey High School (8123)
Broughton St Kempsey 2440
Ph 02 6562 6166 Fax 02 6562 8570
Hastings SEG S9 TP1
kempsey-h.school@det.nsw.edu.au

Kempsey South Public School (4196)
21 Queen St Kempsey 2440
(PO Box 2013 Kempsey 2440)
Ph 02 6562 7033 Fax 02 6562 7645
Hastings SEG P4 TP1
kempseysth-p.school@det.nsw.edu.au

Kempsey West Public School (2279)
Marsh St Kempsey West 2440
Ph 02 6562 7044 Fax 02 6562 6538
Hastings SEG P3 TP1
kempseywst-p.school@det.nsw.edu.au

Kendall Public School (2280)
Logans Crossing Rd Kendall 2439
Ph 02 6559 0040, 02 6559 0042 Fax 02 6559 0071
Manning Camden Haven SEG P4 TP1 A 10
kendall-p.school@det.nsw.edu.au

Kensington Public School (2283)
Doncaster Ave Kensington 2033
Ph 02 9663 3955, 02 9663 4376 Fax 02 9662 1382
Botany Bay SEG P3 TP1
kensington-p.school@det.nsw.edu.au

Kent Road Public School (4160)
Kent & Herring Rds Eastwood 2122
Ph 02 9878 2884, 02 9878 1617 Fax 02 9878 5795
Lane Cove Network SEG P4 TP1
kentroad-p.school@det.nsw.edu.au

Kenthurst Public School (2284)
Kenthurst Rd Kenthurst 2156
Ph 02 9654 1173, 02 9654 1717 Fax 02 9654 2586
Hornsby Network SEG P4 TP1
kenthurst-p.school@det.nsw.edu.au

Kentlyn Public School (2285)
Georges River Rd Campbelltown 2560
Ph 02 4628 2455 Fax 02 4628 4365
Campbelltown SEG P5 TP2
kentlyn-p.school@det.nsw.edu.au

Kentucky Public School (2286)
Noalimba Ave Kentucky 2354
Ph 02 6778 7227 Fax 02 6778 7208
New England Central SEG P5 TP2 A 9C
kentucky-p.school@det.nsw.edu.au

Khancoban Public School (4270)
21 Mitchell Ave Khancoban 2642
Ph 02 6076 9445 Fax 02 6076 9501
Riverina East SEG P6 TP6 A 7
khancoban-p.school@det.nsw.edu.au

Kiama High School (8171)
Saddleback Mountain Rd Kiama 2533
Ph 02 4232 1911, 02 4232 1102 Fax 02 4233 1437
Shoalhaven SEG S8 TP1
kiama-h.school@det.nsw.edu.au

Kiama Public School (2293)
67 Bong Bong St Kiama 2533
Ph 02 4232 1471, 02 4232 2035 Fax 02 4233 1438
Shoalhaven SEG P3 TP1
kiama-p.school@det.nsw.edu.au

Killara High School (8457)
Koola Ave Killara 2071
Ph 02 9498 3299, 02 9498 3722 Fax 02 9498 2202
North Shore Network SEG S8 TP1
killara-h.school@det.nsw.edu.au

Killara Public School (3918)
Ridgeland Ave Killara 2071
Ph 02 9498 2397 Fax 02 9498 2549
North Shore Network SEG P4 TP1
killara-p.school@det.nsw.edu.au

Killarney Heights High School (8422)
58 Starkey St Killarney Heights 2087
Ph 02 9451 7005, 02 9451 5833 Fax 02 9975 5052
Middle Harbour Network SEG S9 TP1
killarney-h.school@det.nsw.edu.au

Killarney Heights Public School (4386)
Tralee Ave Killarney Heights 2087
Ph 02 9451 9547, 02 9451 7114 Fax 02 9975 5038
Middle Harbour Network SEG P2 TP1
killarneyh-p.school@det.nsw.edu.au

Killarney Vale Public School (4426)
Hendricks Rd Killarney Vale 2261
Ph 02 4388 1066 Fax 02 4389 2140
Hunter/Central Coast 1 SEG P3 TP1
killarneyv-p.school@det.nsw.edu.au

Kinchela Public School (2303)
5 Right Bank Rd Kinchela 2440
Ph 02 6567 4828 Fax 02 6567 4689
Hastings SEG P5 TP1 A 10
kinchela-p.school@det.nsw.edu.au

Kincumber High School (8585)
Bungoona Rd Kincumber 2251
Ph 02 4369 1555, 02 4369 1571 Fax 02 4363 1265
Hunter/Central Coast 3 SEG S8 TP1
kincumber-h.school@det.nsw.edu.au

Kincumber Public School (2304)
Avoca Drive Kincumber 2251
Ph 02 4369 1544 Fax 02 4369 2963
Hunter/Central Coast 3 SEG P2 TP1
kincumber-p.school@det.nsw.edu.au

King Park Public School (4467)
Humphries Rd St Johns Park 2176
Ph 02 9604 7691, 02 9604 9735 Fax 02 9725 5351
Fairfield SEG P2 TP2
kingpark-p.school@det.nsw.edu.au

King Street Public School (4514)
King St Singleton 2330
Ph 02 6572 2281 Fax 02 6571 1177
Hunter/Central Coast 8 SEG P2 TP1
kingstreet-p.school@det.nsw.edu.au

Kings Langley Public School (4528)
68 Isaac Smith Pde Kings Langley 2147
Ph 02 9674 4460, 02 9674 4672 Fax 02 9624 5453
Nirimba SEG P2 TP1
kingslangl-p.school@det.nsw.edu.au

Kingscliff High School (8579)
33 Oxford St Kingscliff 2487
Ph 02 6674 9777 Fax 02 6674 3270
Far North Coast SEG S8 TP1
kingscliff-h.school@det.nsw.edu.au

Kingscliff Public School (4054)
3 Orient St Kingscliff 2487
Ph 02 6674 1467, 02 6674 1909 Fax 02 6674 0384
Far North Coast SEG P3 TP1
kingscliff-p.school@det.nsw.edu.au

Kingsgrove High School (8247)
Kingsgrove Rd Kingsgrove 2208
(Locked Bag 4130 Kingsgrove 2208)
Ph 02 9150 4416, 02 9150 4795 Fax 02 9554 3516
Network 8 SEG S8 TP1
kingsgrove-h.school@det.nsw.edu.au

Kingsgrove North High School (8221)
St Albans Rd Kingsgrove 2208
Ph 02 9502 3933, 02 9502 3184 Fax 02 9554 3907
Inner West SEG S9 TP1
kingsgrovn-h.school@det.nsw.edu.au

Kingsgrove Public School (2307)
Kingsgrove Rd Kingsgrove 2208
Ph 02 9150 9097, 02 9150 9254 Fax 02 9554 3776
Inner West SEG P2 TP1
kingsgrove-p.school@det.nsw.edu.au

Kingstown Public School (2310)
Bundarra-Bendemeer Rd Kingstown 2358
Ph 02 6778 9131 Fax 02 6778 9122
New England Central SEG P5 TP4 A 4
kingstown-p.school@det.nsw.edu.au

Kingswood High School (8458)
Bringelly Rd Kingswood 2747
Ph 02 4736 1201, 02 4736 1202 Fax 02 4736 6011
Penrith Valley SEG S9 TP1
kingswood-h.school@det.nsw.edu.au

Kingswood Park Public School (4346)
Caloola Ave Penrith 2750
Ph 02 4721 4414, 02 4721 5124 Fax 02 4721 0904
Penrith Valley SEG P5 TP1
kingswoopk-p.school@det.nsw.edu.au

Kingswood Public School (2312)
Second Ave Kingswood 2747
Ph 02 4736 4028 Fax 02 4736 6012
Penrith Valley SEG P4 TP1
kingswood-p.school@det.nsw.edu.au

Kingswood South Public School (4339)
Smith St Kingswood 2747
Ph 02 4736 2408, 02 4736 2409 Fax 02 4736 6001
Penrith Valley SEG P3 TP1
kingswoods-p.school@det.nsw.edu.au

Kirkton Public School (2314)
797 Standen Drive Lower Belford via Branxton 2335
Ph 02 6574 7152 Fax 02 6574 7227
Hunter/Central Coast 8 SEG P5 TP1
kirkton-p.school@det.nsw.edu.au

Kirrawee High School (8437)
21-29 Hunter St Kirrawee 2232
Ph 02 9521 2099 Fax 02 9545 1547
Woronora River SEG S8 TP1
kirrawee-h.school@det.nsw.edu.au

Kirrawee Public School (4075)
Bath Rd Kirrawee 2232
Ph 02 9521 4514, 02 9521 4102 Fax 02 9545 3318
Woronora River SEG P4 TP1
kirrawee-p.school@det.nsw.edu.au

Kitchener Public School (2315)
Richmond St Kitchener 2325
Ph 02 4990 2974 Fax 02 4991 1875
Hunter/Central Coast 9 SEG P5 TP1
kitchener-p.school@det.nsw.edu.au

Kogarah High School (8320)
Gladstone St Kogarah 2217
Ph 02 9587 5815, 02 9587 6259 Fax 02 9553 8316
Georges River SEG S9 TP1
kogarah-h.school@det.nsw.edu.au

Kogarah Public School (2319)
Gladstone St Kogarah 2217
Ph 02 9587 9472, 02 9587 2831 Fax 02 9553 8306
Georges River SEG P3 TP1
kogarah-p.school@det.nsw.edu.au

Koonawarra Public School (4409)
Byamee St Dapto 2530
Ph 02 4261 2880 Fax 02 4262 2046
Shellharbour SEG P3 TP1
koonawarra-p.school@det.nsw.edu.au

Koorawatha Public School (2326)
Crowther St Koorawatha 2807
Ph 02 6345 3414 Fax 02 6345 3458
Lachlan SEG P5 TP4 A 8
koorawatha-p.school@det.nsw.edu.au

Kooringal High School (8483)
Ziegler Ave Kooringal North 2650
(PO Box 8607 Kooringal 2650)
Ph 02 6922 5155, 02 6922 5343 Fax 02 6922 3877
Riverina East SEG S8 TP1
kooringal-h.school@det.nsw.edu.au

Kooringal Public School (4173)
Lake Albert Rd Wagga Wagga 2650
Ph 02 6922 6443, 02 6922 6268 Fax 02 6926 2034
Riverina East SEG P3 TP1
kooringal-p.school@det.nsw.edu.au

Kootingal Public School (2327)
Denman Ave Kootingal 2352
(PO Box 363 Kootingal 2352)
Ph 02 6760 3332 Fax 02 6760 3064
New England Central SEG P4 TP1 A 9
kootingal-p.school@det.nsw.edu.au

Kororo Public School (2330)
3 Korora School Road Korora 2450
Ph 02 6653 6201 Fax 02 6653 6776
Coffs Harbour SEG P2 TP1
kororo-p.school@det.nsw.edu.au

Kotara High School (8423)
Lexington Pde Adamstown 2289
Ph 02 4943 3281, 02 4943 3044 Fax 02 4942 1049
Hunter/Central Coast 5 SEG S8 TP1
kotara-h.school@det.nsw.edu.au

Kotara School (5738)
Seaview & Park Aves Kotara 2289
Ph 02 4957 3274 Fax 02 4956 1734
Hunter/Central Coast 5 SEG SSP5 TP1
kotara-s.school@det.nsw.edu.au

Kotara South Public School (4203)
Rae Cres Kotara 2289
Ph 02 4957 5319, 02 4957 4350 Fax 02 4956 2203
Hunter/Central Coast 5 SEG P4 TP1
kotarasth-p.school@det.nsw.edu.au

Krambach Public School (2333)
3838 Bucketts Way Krambach 2429
Ph 02 6559 1221 Fax 02 6559 1206
Lower North Coast SEG P5 TP1 A 8
krambach-p.school@det.nsw.edu.au

Kulnura Public School (2334)
9 Williams Rd Kulnura 2250
Ph 02 4376 1264 Fax 02 4376 1109
Hunter/Central Coast 3 SEG P5 TP1
kulnura-p.school@det.nsw.edu.au

Ku-ring-gai High School (8416)
Bobbin Head Rd Turramurra North 2074
Ph 02 9144 3477, 02 9144 7617 Fax 02 9983 9331
North Shore Network SEG S8 TP1
kuringgai-h.school@det.nsw.edu.au

Kurmond Public School (2340)
494 Bells Line of Road Kurmond 2757
Ph 02 4573 1648 Fax 02 4573 2122
Hawkesbury SEG P4 TP1
kurmond-p.school@det.nsw.edu.au

Kurnell Public School (2341)
Dampier & Torres Sts Kurnell 2231
Ph 02 9668 9864 Fax 02 9668 8131
Port Hacking SEG P4 TP1
kurnell-p.school@det.nsw.edu.au

Kurrajong East Public School (2343)
East Kurrajong Rd Kurrajong East 2758
Ph 02 4576 3321 Fax 02 4576 3579
Hawkesbury SEG P5 TP1
kurrajonge-p.school@det.nsw.edu.au

Kurrajong North Public School (2344)
Bells Line of Road Kurrajong Hills 2758
Ph 02 4567 7291 Fax 02 4567 7267
Hawkesbury SEG P5 TP1
kurrajongn-p.school@det.nsw.edu.au

Kurrajong Public School (2342)
1111 Grose Vale Rd Kurrajong 2758
Ph 02 4573 1647 Fax 02 4573 2044
Hawkesbury SEG P4 TP1
kurrajong-p.school@det.nsw.edu.au

Kurrambee School (5621)
Werrington Rd Werrington 2747
Ph 02 9833 7400 Fax 02 9623 1335
Minchinbury SEG SSP3 TP4
kurrambee-s.school@det.nsw.edu.au

Kurri Kurri High School (8177)
Stanford & Deakin Sts Kurri Kurri 2327
Ph 02 4937 1877, 02 4937 1556 Fax 02 4937 3773
Hunter/Central Coast 9 SEG S9 TP1
kurrikurri-h.school@det.nsw.edu.au

Kurri Kurri Public School (7422)
Lang St Kurri Kurri 2327
Ph 02 4937 1235, 02 4937 1319 Fax 02 4936 1128
Hunter/Central Coast 9 SEG P1 TP1
kurrikurri-p.school@det.nsw.edu.au

Kyeemagh Infants School (5141)
Beehag St Rockdale 2216
Ph 02 9567 5819 Fax 02 9567 2967
Network 8 SEG P5 TP1
kyeemaghin-p.school@det.nsw.edu.au

Kyogle High School (8189)
Summerland Way Kyogle 2474
(PO Box 104 Kyogle 2474)
Ph 02 6632 1300 Fax 02 6632 2590
Richmond Valley SEG S9 TP1
kyogle-h.school@det.nsw.edu.au

Kyogle Public School (2349)
192 Summerland Way Kyogle 2474
Ph 02 6632 1200 Fax 02 6632 2579
Richmond Valley SEG P3 TP1
kyogle-p.school@det.nsw.edu.au

La Perouse Public School (2373)
Yarra Rd La Perouse 2036
(PO Box 119 Matraville 2036)
Ph 02 9311 2210 Fax 02 9311 3805
Botany Bay SEG P5 TP1
laperouse-p.school@det.nsw.edu.au

Ladysmith Public School (2353)
Tywong St Ladysmith 2652
Ph 02 6922 1524 Fax 02 6922 1696
Riverina North SEG P5 TP2 A 8
ladysmith-p.school@det.nsw.edu.au

Laggan Public School (2354)
Laggan Rd Laggan 2583
Ph 02 4837 3215 Fax 02 4837 3227
Queanbeyan SEG P5 TP2 A 10C
laggan-p.school@det.nsw.edu.au

Lagoon Public School, The (2355)
71 Young St The Lagoon via Perthville 2795
Ph 02 6337 2525 Fax 02 6337 2531
Bathurst SEG P6 TP1 A C
thelagoon-p.school@det.nsw.edu.au

Laguna Public School (2356)
Old Sydney Rd Laguna 2325
Ph 02 4998 8251 Fax 02 4998 8106
Hunter/Central Coast 9 SEG P5 TP1
laguna-p.school@det.nsw.edu.au

Laguna Street Public School (4230)
204 Caringbah Road Caringbah 2229
Ph 02 9524 3752, 02 9524 2955 Fax 02 9540 3031
Port Hacking SEG P3 TP1
lagunastr-p.school@det.nsw.edu.au

Lake Albert Public School (2357)
Main St Lake Albert 2650
Ph 02 6922 6400 Fax 02 6926 2065
Riverina East SEG P3 TP1
lakealbert-p.school@det.nsw.edu.au

Lake Cargelligo Central School (2359)
65 Canada St Lake Cargelligo 2672
Ph 02 6898 1008 Fax 02 6898 1323
Riverina North West SEG C3 TP6 A 7HL
lakecargel-c.school@det.nsw.edu.au

Lake Heights Public School (4011)
Northcliffe Drive Lake Heights 2502
Ph 02 4274 1740 Fax 02 4276 2872
Wollongong SEG P5 TP1
lakeheight-p.school@det.nsw.edu.au

Lake Illawarra High School (8474)
Reddall Pde Lake Illawarra 2528
Ph 02 4296 3844 Fax 02 4296 3948
Shellharbour SEG S8 TP1
lakeillawa-h.school@det.nsw.edu.au

Lake Illawarra South Public School (3867)
109-129 Reddall Pde Lake Illawarra South 2528
Ph 02 4295 1924, 02 4295 1934 Fax 02 4297 2803
Shellharbour SEG P4 TP1
lakeillaws-p.school@det.nsw.edu.au

Lake Macquarie High School (8210)
Marmong St Booragul 2284
Ph 02 4958 1544 Fax 02 4958 1746
Hunter/Central Coast 6 SEG S9 TP1
lakemacqua-h.school@det.nsw.edu.au

Lake Munmorah High School (8279)
Carters Rd Lake Munmorah 2259
(PO Box 6114 Lake Munmorah 2259)
Ph 02 4358 1411 Fax 02 4358 1433
Hunter/Central Coast 3 SEG S9 TP1
lakemunmor-h.school@det.nsw.edu.au

Lake Munmorah Public School (2362)
Carters Rd Lake Munmorah 2259
Ph 02 4358 1171 Fax 02 4358 8625
Hunter/Central Coast 3 SEG P2 TP1
lakemunmor-p.school@det.nsw.edu.au

Lake Wyangan Public School (2363)
Boorga Rd Lake Wyangan 2680
(PO Box 78 Lake Wyangan 2680)
Ph 02 6962 3217 Fax 02 6964 1462
Riverina North West SEG P5 TP2
lakewyanga-p.school@det.nsw.edu.au

Lakelands Public School (4266)
Lakelands Drive Dapto 2530
Ph 02 4261 1540 Fax 02 4262 2047
Shellharbour SEG P3 TP1
lakelands-p.school@det.nsw.edu.au

Lakemba Public School (2360)
Alice St Lakemba 2195
Ph 02 9759 8079, 02 9759 2915 Fax 02 9740 6794
Strathfield SEG P3 TP1
lakemba-p.school@det.nsw.edu.au

Lakeside School (5686)
Pacific Hwy Gateshead 2290
(PO Box 4044 Gateshead 2290)
Ph 02 4943 8999 Fax 02 4943 4022
Hunter/Central Coast 7 SEG SSP4 TP1
lakeside-s.school@det.nsw.edu.au

Lalor Park Public School (4191)
Heffron Rd Lalor Park 2147
Ph 02 9624 4808, 02 9624 5220 Fax 02 9838 7651
Nirimba SEG P4 TP2
lalorpark-p.school@det.nsw.edu.au

Lambton High School (8482)
Womboin & Young Rds Lambton 2299
Ph 02 4952 3977 Fax 02 4956 2429
Hunter/Central Coast 5 SEG S8 TP1
lambton-h.school@det.nsw.edu.au

Lambton Public School (2366)
Croudace St Lambton 2299
Ph 02 4957 1667 Fax 02 4956 2430
Hunter/Central Coast 5 SEG P3 TP1
lambton-p.school@det.nsw.edu.au

Lane Cove Public School (2368)
Austin St & Longueville Rd Lane Cove 2066
(PO Box 127 Lane Cove 1595)
Ph 02 9427 1024, 02 9427 2155 Fax 02 9418 6277
Lane Cove Network SEG P1 TP1
lanecove-p.school@det.nsw.edu.au

Lane Cove West Public School (3908)
Avalon Ave Lane Cove 2066
Ph 02 9427 4743 Fax 02 9418 6865
Lane Cove Network SEG P3 TP1
lanecovew-p.school@det.nsw.edu.au

Lansdowne Public School (2370)
Cundle Rd & Macquarie St Lansdowne 2430
Ph 02 6556 7147 Fax 02 6556 7064
Manning Camden Haven SEG P5 TP1 A 10
lansdowne-p.school@det.nsw.edu.au

Lansvale East Public School (4391)
Riverside Rd Cabramatta 2166
Ph 02 9728 1278, 02 9726 2880 Fax 02 9728 2339
Fairfield SEG P5 TP2
lansvalee-p.school@det.nsw.edu.au

Lansvale Public School (5220)
Chancery St Canley Vale 2166
Ph 02 9724 5252, 02 9727 8985 Fax 02 9754 1572
Fairfield SEG P2 TP2
lansvale-p.school@det.nsw.edu.au

Lapstone Public School (4424)
Explorers Rd Glenbrook 2773
Ph 02 4739 2208, 02 4739 4122 Fax 02 4739 2301
Blue Mountains SEG P4 TP1
lapstone-p.school@det.nsw.edu.au

Largs Public School (2374)
1-5 Hunter St Largs 2320
Ph 02 4930 1494 Fax 02 4930 1843
Hunter/Central Coast 9 SEG P5 TP1
largs-p.school@det.nsw.edu.au

Larnook Public School (2375)
Cawongla Rd Larnook via Lismore 2480
Ph 02 6688 0133 Fax 02 6688 0189
The Wilson SEG P5 TP1 A 8
larnook-p.school@det.nsw.edu.au

Laurieton Public School (2377)
Bold St Laurieton 2443
Ph 02 6559 9084 Fax 02 6559 9572
Manning Camden Haven SEG P4 TP1
laurieton-p.school@det.nsw.edu.au

Lavington East Public School (4168)
518 Daly Street Lavington 2641
Ph 02 6025 1157 Fax 02 6040 2332
Riverina South SEG P3 TP1
lavingtone-p.school@det.nsw.edu.au

Lavington Public School (2378)
497 Hague St Lavington 2641
Ph 02 6025 1864, 02 6025 3800 Fax 02 6040 2325
Riverina South SEG P3 TP1
lavington-p.school@det.nsw.edu.au

Lawrence Hargrave School (5632)
Station St Warwick Farm 2170
Ph 02 9602 3823 Fax 02 9822 5092
Liverpool SEG SSP3 TP2
lawrenceha-s.school@det.nsw.edu.au

Lawrence Public School (2379)
High St Lawrence 2460
Ph 02 6647 7354 Fax 02 6647 7068
Clarence SEG P5 TP1 A 10
lawrence-p.school@det.nsw.edu.au

Lawson Public School (2381)
Wilson St Lawson 2783
Ph 02 4759 1196, 02 4759 1258 Fax 02 4759 2693
Blue Mountains SEG P4 TP1
lawson-p.school@det.nsw.edu.au

Leeton High School (8156)
Mallee & Myrtle Sts Leeton 2705
Ph 02 6953 2122 Fax 02 6953 5085
Riverina West SEG S9 TP4
leeton-h.school@det.nsw.edu.au

Leeton Public School (2386)
Mallee St Leeton 2705
Ph 02 6953 3488 Fax 02 6953 3175
Riverina West SEG P3 TP4
leeton-p.school@det.nsw.edu.au

Leeville Public School (1740)
9375 Summerland Way Leeville 2470
Ph 02 6664 1280 Fax 02 6664 1353
Richmond Valley SEG P5 TP1 A 10
leeville-p.school@det.nsw.edu.au

Leichhardt Public School (7423)
Marion St Leichhardt 2040
Ph 02 9560 9440, 02 9569 4141 Fax 02 9550 9412
Port Jackson SEG P3 TP1
leichhardt-p.school@det.nsw.edu.au

Lennox Head Public School (4184)
Byron St Lennox Head 2478
Ph 02 6687 7230 Fax 02 6687 7082
Southern Cross SEG P3 TP1 A 10
lennoxhead-p.school@det.nsw.edu.au

Leonay Public School (4475)
Buring Ave Emu Plains 2750
Ph 02 4735 5851 Fax 02 4735 6373
Blue Mountains SEG P4 TP1
leonay-p.school@det.nsw.edu.au

Leppington Public School (2926)
Rickard Rd Leppington 2171
Ph 02 9606 5397, 02 9606 6574 Fax 02 9606 5244
Hoxton SEG P5 TP1
leppington-p.school@det.nsw.edu.au

Les Powell School (5712)
Townview & Hoff Sts Mount Pritchard 2170
Ph 02 9821 1711 Fax 02 9821 2634
Liverpool SEG SSP4 TP2
lespowell-s.school@det.nsw.edu.au

Lethbridge Park Public School (4408)
Copeland Rd Lethbridge Park 2770
Ph 02 9628 6655 Fax 02 9628 0651
Mt Druitt SEG P3 TP4
lethbridpk-p.school@det.nsw.edu.au

Leumeah High School (8532)
Junction Rd Leumeah 2560
Ph 02 4625 7755, 02 4625 7155 Fax 02 4628 5015
Campbelltown SEG S8 TP2
leumeah-h.school@det.nsw.edu.au

Leumeah Public School (4058)
Burrendong Rd Leumeah 2560
Ph 02 4625 5245, 02 4625 9462 Fax 02 4625 0306
Campbelltown SEG P2 TP2
leumeah-p.school@det.nsw.edu.au

Leura Public School (2391)
Bathurst Rd Leura 2780
Ph 02 4784 1251, 02 4784 1252 Fax 02 4784 3156
Blue Mountains SEG P3 TP1
leura-p.school@det.nsw.edu.au

Lewisham Public School (4369)
The Boulevarde Lewisham 2049
Ph 02 9569 4536 Fax 02 9569 8391
Inner City SEG P5 TP1
lewisham-p.school@det.nsw.edu.au

Lidcombe Public School (2394)
Mills Street Lidcombe 2141
Ph 02 9649 7576, 02 9649 6527 Fax 02 9749 1197
Bankstown SEG P2 TP1
lidcombe-p.school@det.nsw.edu.au

Lightning Ridge Central School (2395)
Kaolin St Lightning Ridge 2834
Ph 02 6829 0511 Fax 02 6829 0137
Bourke SEG C1 TP8 A 3HL
lightningr-c.school@det.nsw.edu.au

Lilli Pilli Public School (4084)
Lilli Pilli Point Rd Lilli Pilli 2229
Ph 02 9524 9705, 02 9524 8815 Fax 02 9540 3076
Port Hacking SEG P3 TP1
lillipilli-p.school@det.nsw.edu.au

Lincoln School (5757)
Westview St Dubbo 2830
(PO Box 6126 Dubbo 2830)
Ph 02 6881 0870 Fax 02 6881 0872
Dubbo SEG SSP5 TP1
lincoln-s.school@det.nsw.edu.au

Lindfield East Public School (2404)
Tryon Rd East Lindfield 2070
Ph 02 9416 1955, 02 9416 6457 Fax 02 9416 2836
North Shore Network SEG P1 TP1
lindfielde-p.school@det.nsw.edu.au

Lindfield Public School (2403)
Pacific Hwy Lindfield 2070
Ph 02 9416 1903, 02 9416 7903 Fax 02 9416 2317
North Shore Network SEG P2 TP1
lindfield-p.school@det.nsw.edu.au

Lindsay Park Public School (4042)
Thames St Wollongong 2500
Ph 02 4229 2487 Fax 02 4228 3145
Wollongong SEG P4 TP1
lindsaypk-p.school@det.nsw.edu.au

Lisarow High School (8544)
Chamberlain Rd Lisarow 2250
Ph 02 4328 4599 Fax 02 4329 1416
Hunter/Central Coast 3 SEG S8 TP1
lisarow-h.school@det.nsw.edu.au

Lisarow Public School (2407)
McDonalds Rd Lisarow 2250
Ph 02 4362 1048, 02 4362 1014 Fax 02 4362 1621
Hunter/Central Coast 3 SEG P4 TP1
lisarow-p.school@det.nsw.edu.au

Lismore Heights Public School (4085)
195 High St Lismore Heights 2480
Ph 02 6624 3344, 02 6624 3371 Fax 02 6625 2154
The Wilson SEG P4 TP1
lismorehts-p.school@det.nsw.edu.au

Lismore High School (8124)
Dalley St Lismore 2480
(PO Box 566 Lismore 2480)
Ph 02 6621 5185, 02 6621 2122 Fax 02 6622 2940
The Wilson SEG S9 TP1
lismore-h.school@det.nsw.edu.au

Lismore Public School (1780)
Pound St Lismore 2480
Ph 02 6621 5366, 02 6621 3048 Fax 02 6622 1801
The Wilson SEG P3 TP1
lismore-p.school@det.nsw.edu.au

Lismore South Public School (2409)
Phyllis & Wilson Sts Lismore 2480
Ph 02 6621 3433, 02 6621 4397 Fax 02 6622 2797
The Wilson SEG P3 TP1
lismoresth-p.school@det.nsw.edu.au

Lithgow High School (8125)
1 Pau St Lithgow 2790
(PO Box 296 Lithgow 2790)
Ph 02 6352 1422 Fax 02 6353 1081
Bathurst SEG S8 TP2
lithgow-h.school@det.nsw.edu.au

Lithgow Public School (2410)
163 Mort St Lithgow 2790
Ph 02 6351 2297, 02 6351 2734 Fax 02 6353 1039
Bathurst SEG P3 TP2
lithgow-p.school@det.nsw.edu.au

Liverpool Boys High School (8186)
Forbes St Liverpool 2170
Ph 02 9602 7979, 02 9602 7986 Fax 02 9821 4068
Liverpool SEG S9 TP1
liverpoolb-h.school@det.nsw.edu.au

Liverpool Girls High School (8176)
Forbes St Liverpool 2170
Ph 02 9602 0083, 02 9602 0997 Fax 02 9822 4351
Liverpool SEG S8 TP1
liverpool-h.school@det.nsw.edu.au

Liverpool Hospital School (5556)
Elizabeth St Liverpool 2170
Ph 02 9828 5660 Fax 02 9828 5659
Liverpool SEG SSP4 TP1
liverplhos-s.school@det.nsw.edu.au

Liverpool Public School (7424)
Railway St Liverpool 2170
Ph 02 9602 7882, 02 9602 7111 Fax 02 9821 3030
Liverpool SEG P2 TP1
liverpool-p.school@det.nsw.edu.au

Liverpool West Public School (4161)
79-81 Hoxton Park Rd Liverpool 2170
Ph 02 9602 8062, 02 9602 6595 Fax 02 9822 5093
Liverpool SEG P2 TP2
liverpoolw-p.school@det.nsw.edu.au

Llandilo Public School (2413)
Seventh Ave Llandilo 2747
Ph 02 4777 4124 Fax 02 4777 5085
Penrith Valley SEG P4 TP1
llandilo-p.school@det.nsw.edu.au

Lochinvar Public School (2417)
New England Hwy Lochinvar 2321
Ph 02 4930 7223 Fax 02 4930 7804
Hunter/Central Coast 8 SEG P5 TP1
lochinvar-p.school@det.nsw.edu.au

Lockhart Central School (2418)
Halliday St Lockhart 2656
Ph 02 6920 5209 Fax 02 6920 5635
Riverina Central SEG C4 TP4 A 10
lockhart-c.school@det.nsw.edu.au

Loftus Public School (4221)
Tenth Ave Loftus 2232
Ph 02 9521 1066, 02 9521 3689 Fax 02 9545 3459
Woronora River SEG P3 TP1
loftus-p.school@det.nsw.edu.au

Lomandra School (5753)
Beverley Rd Campbelltown 2560
(PO Box N20 Campbelltown North 2560)
Ph 02 4627 2096 Fax 02 4627 1455
Campbelltown SEG SSP4 TP2
lomandra-s.school@det.nsw.edu.au

Londonderry Public School (2421)
Londonderry Rd Londonderry 2753
Ph 02 4578 1900 Fax 02 4588 5883
Hawkesbury SEG P4 TP1
londonderr-p.school@det.nsw.edu.au

Long Flat Public School (2423)
Oxley Hwy Long Flat 2446
Ph 02 6587 4255 Fax 02 6587 4334
Hastings SEG P5 TP1 A 6
longflat-p.school@det.nsw.edu.au

Longneck Lagoon Environmental Education Centre (5690)
Whitmore Rd Maraylya 2765
Ph 02 4573 6323 Fax 02 4573 6534
Hawkesbury SEG EEC2 TP1
longneck-e.school@det.nsw.edu.au

Lord Howe Island Central School (1921)
Lagoon Rd Lord Howe Island 2898
Ph 02 6563 2096 Fax 02 6563 2238
Mid North Coast SEG C4 TP1
lordhowe-c.school@det.nsw.edu.au

Louth Public School (3594)
Hughes St Louth 2840
Ph 02 6874 7426 Fax 02 6874 7439
Bourke SEG P6 TP8 A 1HL
louth-p.school@det.nsw.edu.au

Lowanna Public School (2428)
Coramba Rd Lowanna 2450
Ph 02 6654 5243 Fax 02 6654 5370
Coffs Harbour SEG P6 TP1 A 7
lowanna-p.school@det.nsw.edu.au

Lowesdale Public School (2429)
Riverina Hwy Lowesdale 2646
Ph 02 6035 8216 Fax 02 6035 8219
Riverina South SEG P6 TP2 A 8
lowesdale-p.school@det.nsw.edu.au

Lucas Gardens School (5713)
Walker St Canada Bay 2046
Ph 02 9744 6461, 02 9744 6462 Fax 02 9744 1705
Strathfield SEG SSP4 TP1
lucasgarde-s.school@det.nsw.edu.au

Lucas Heights Community School (8271)
132 Old Illawarra Rd Barden Ridge 2234
Ph 02 9543 8317 Fax 02 9541 0036
Woronora River SEG C8 TP1
lucasheigh-h.school@det.nsw.edu.au

Luddenham Public School (2431)
24 Jamieson St Luddenham 2745
Ph 02 4773 4111 Fax 02 4773 3163
Penrith Valley SEG P5 TP1
luddenham-p.school@det.nsw.edu.au

Lue Public School (2432)
Swanston St Lue 2850
Ph 02 6373 6407 Fax 02 6373 6431
Warrumbungle SEG P6 TP4 A 8
lue-p.school@det.nsw.edu.au

Lugarno Public School (3796)
Old Forest Rd Lugarno 2210
Ph 02 9153 9843, 02 9153 5737 Fax 02 9534 1337
Georges River SEG P3 TP1
lugarno-p.school@det.nsw.edu.au

Lurnea High School (8401)
Hillview Pde Lurnea 2170
Ph 02 9602 5704, 02 9602 0036 Fax 02 9822 5094
Liverpool SEG S9 TP4
lurnea-h.school@det.nsw.edu.au

Lurnea Public School (4289)
West & Reilly Sts Lurnea 2170
Ph 02 9607 7002, 02 9607 6001 Fax 02 9608 4938
Liverpool SEG P2 TP4
lurnea-p.school@det.nsw.edu.au

Lyndhurst Public School (2436)
Marsden St Lyndhurst 2797
Ph 02 6367 5016 Fax 02 6367 5205
Orange SEG P5 TP2 A 8
lyndhurst-p.school@det.nsw.edu.au

Lynwood Park Public School (4258)
Turner St Blacktown 2148
Ph 02 9622 2659, 02 9622 3093 Fax 02 9831 6727
Nirimba SEG P4 TP1
lynwoodpk-p.school@det.nsw.edu.au

Macarthur Girls High School (8822)
Macarthur St Parramatta 2150
Ph 02 9683 1866 Fax 02 9890 1992
Cumberland SEG S8 TP1
macarthurg-h.school@det.nsw.edu.au

Macdonald Valley Public School (2439)
St Albans Rd Wisemans Ferry 2775
Ph 02 4568 2120 Fax 02 4568 2022
Hawkesbury SEG P6 TP1
macdonaldv-p.school@det.nsw.edu.au

Macintyre High School (8490)
Swanbrook Rd Inverell 2360
(PO Box 16 Inverell 2360)
Ph 02 6722 1555 Fax 02 6722 5831
New England North SEG S9 TP2
macintyre-h.school@det.nsw.edu.au

Macksville High School (8162)
Boundary St Macksville 2447
Ph 02 6568 1025, 02 6568 1066 Fax 02 6568 2802
Mid North Coast SEG S9 TP1
macksville-h.school@det.nsw.edu.au

Macksville Public School (2444)
35a Wallace St Macksville 2447
Ph 02 6568 1800 Fax 02 6568 2277
Mid North Coast SEG P3 TP1
macksville-p.school@det.nsw.edu.au

Maclean High School (8362)
Woombah Street Maclean 2463
Ph 02 6645 2244, 02 6645 2156 Fax 02 6645 2819
Clarence SEG S9 TP1
maclean-h.school@det.nsw.edu.au

Maclean Public School (3946)
Woodford St Maclean 2463
Ph 02 6645 2431, 02 6645 2544 Fax 02 6645 3750
Clarence SEG P4 TP1
maclean-p.school@det.nsw.edu.au

Macquarie Boys High School (8200)
James Ruse Drive Parramatta North 2151
Ph 02 9630 3139, 02 9630 3951 Fax 02 9630 2738
Cumberland SEG S9 TP1
macquarieb-h.school@det.nsw.edu.au

Macquarie Fields High School (8553)
2 Harold St Macquarie Fields 2564
(PO Box 269 Ingleburn 1890)
Ph 02 9605 3111, 02 8778 4111 Fax 02 9605 3044
Ingleburn SEG S8 TP2
macfields-h.school@det.nsw.edu.au

Macquarie Fields Public School (4064)
Fields Rd Macquarie Fields 2564
(PO Box 56 Macquarie Fields NSW 2564)
Ph 02 9605 1024, 02 9605 2387 Fax 02 9829 2432
Ingleburn SEG P2 TP2
macfields-p.school@det.nsw.edu.au

Madang Avenue Public School (4449)
Mimika Ave Whalan 2770
Ph 02 9625 7144, 02 9625 7809 Fax 02 9832 1470
Mt Druitt SEG P3 TP4
madangave-p.school@det.nsw.edu.au

Maimuru Public School (2448)
Jack Masling Dr Maimuru 2594
Ph 02 6383 3219 Fax 02 6383 3289
Riverina North SEG P5 TP2 A 9
maimuru-p.school@det.nsw.edu.au

Main Arm Upper Public School (3236)
1129 Main Arm Rd Upper Main Arm 2482
(PO Box 684 Mullumbimby 2482)
Ph 02 6684 5266 Fax 02 6684 5527
Southern Cross SEG P5 TP1 A 10
mainarmup-p.school@det.nsw.edu.au

Mainsbridge School (5630)
Flowerdale Rd Liverpool 2170
Ph 02 9602 9675 Fax 02 9821 4038
Liverpool SEG SSP2 TP2
mainsbridg-s.school@det.nsw.edu.au

Maitland East Public School (2451)
William St Maitland East 2323
Ph 02 4933 7524, 02 4933 7073 Fax 02 4934 5012
Hunter/Central Coast 10 SEG P1 TP1
maitlande-p.school@det.nsw.edu.au

Maitland Grossmann High School (8127)
Cumberland & Dixon Sts Maitland East 2323
Ph 02 4934 2066 Fax 02 4934 5086
Hunter/Central Coast 10 SEG S8 TP1
maitgross-h.school@det.nsw.edu.au

Maitland High School (8126)
High St Maitland East 2323
(PO Box 498 Maitland East 2323
Ph 02 4933 7933, 02 4933 7508 Fax 02 4933 7673
Hunter/Central Coast 9 SEG S9 TP1
maitland-h.school@det.nsw.edu.au

Maitland Public School (3949)
Elgin St Maitland 2320
Ph 02 4933 6532 Fax 02 4934 3039
Hunter/Central Coast 10 SEG P3 TP1
maitland-p.school@det.nsw.edu.au

Malabar Public School (2454)
Franklin St Malabar 2036
Ph 02 9311 2012 Fax 02 9661 5890
Network 8 SEG P4 TP1
malabar-p.school@det.nsw.edu.au

Mallan Public School (4035)
Cunninyeuk Rd Mallan NSW via Swan Hill Vic 3586
Ph 03 5034 0539 Fax 03 5034 0530
Riverina South West SEG P6 TP6 A 5HL
mallan-p.school@det.nsw.edu.au

Mallanganee Public School (2456)
Tooloom St Mallanganee 2469
Ph 02 6664 5108 Fax 02 6664 5205
Richmond Valley SEG P6 TP1 A 7
mallangane-p.school@det.nsw.edu.au

Mallawa Public School (4262)
Combadello-Poison Gate Rd Moree 2400
Ph 02 6753 9520 Fax 02 6753 9526
New England West SEG P6 TP8 A 4HL
mallawa-p.school@det.nsw.edu.au

Mandurama Public School (2460)
Loquat St Mandurama 2792
Ph 02 6367 5103 Fax 02 6367 5306
Orange SEG P5 TP2 A 9
mandurama-p.school@det.nsw.edu.au

Mangoplah Public School (2462)
Kyeamba St Mangoplah 2652
Ph 02 6928 5739 Fax 02 6928 5800
Riverina North SEG P5 TP2 A 7
mangoplah-p.school@det.nsw.edu.au

Manifold Public School (2464)
Lismore-Kyogle Rd Bentley 2480
Ph 02 6663 5220 Fax 02 6663 5313
Richmond Valley SEG P6 TP1 A 8
manifold-p.school@det.nsw.edu.au

Manildra Public School **(2465)**
Molong Rd Manildra 2865
Ph 02 6364 5055 Fax 02 6364 5255
Orange SEG P5 TP2 A 9
manildra-p.school@det.nsw.edu.au

Manilla Central School **(7305)**
Wilga Ave Manilla 2346
(PO Box 187 Manilla 2346)
Ph 02 6785 1184, 02 6785 1599 Fax 02 6785 2138
New England South SEG C2 TP2
manilla-c.school@det.nsw.edu.au

Manly Vale Public School **(4021)**
Sunshine St Manly Vale 2093
Ph 02 9907 9672 Fax 02 9907 0890
Peninsula Network SEG P4 TP1
manlyvale-p.school@det.nsw.edu.au

Manly Village Public School **(3950)**
Darley Rd Manly 2095
Ph 02 9977 3066, 02 9977 3959 Fax 02 9976 2733
Peninsula Network SEG P3 TP1
manlyvill-p.school@det.nsw.edu.au

Manly West Public School **(2469)**
Griffith St Balgowlah 2093
Ph 02 9948 2257, 02 9948 1959 Fax 02 9907 0342
Peninsula Network SEG P2 TP1
manlywest-p.school@det.nsw.edu.au

Mannering Park Public School **(4316)**
Vales Rd Mannering Park 2259
(PO Box 7286 Mannering Park 2259)
Ph 02 4359 1184 Fax 02 4359 1667
Hunter/Central Coast 3 SEG P3 TP1
mannringpk-p.school@det.nsw.edu.au

Manning Gardens Public School **(4552)**
Mudford Street Taree 2430
Ph 02 6552 6333 Fax 02 6551 0816
Manning Camden Haven SEG P4 TP1
manninggdn-p.school@det.nsw.edu.au

Maraylya Public School **(2472)**
Neich Rd Maraylya 2765
Ph 02 4573 6243 Fax 02 4573 6599
Hawkesbury SEG P5 TP1
maraylya-p.school@det.nsw.edu.au

Marayong Heights Public School **(4282)**
Guerie St Marayong 2148
(PO Box 4229 Marayong 2148)
Ph 02 9622 4776, 02 9622 1274 Fax 02 9831 3571
Nirimba SEG P3 TP1
marayonght-p.school@det.nsw.edu.au

Marayong Public School **(4166)**
Davis Rd Blacktown 2148
Ph 02 9622 2394, 02 9622 2237 Fax 02 9831 3795
Nirimba SEG P2 TP2
marayong-p.school@det.nsw.edu.au

Marayong South Public School **(4327)**
McClean St Blacktown 2148
Ph 02 9622 4216 Fax 02 9831 3562
Minchinbury SEG P3 TP2
marayongs-p.school@det.nsw.edu.au

Marks Point Public School **(3898)**
Findon St Marks Point 2280
Ph 02 4945 4433 Fax 02 4947 7842
Hunter/Central Coast 7 SEG P4 TP1
markspoint-p.school@det.nsw.edu.au

Maroota Public School **(2480)**
Old Northern Rd Maroota 2756
Ph 02 4566 8231 Fax 02 4566 8388
Hawkesbury SEG P5 TP1
maroota-p.school@det.nsw.edu.au

Maroubra Bay Public School **(2482)**
Duncan St Maroubra 2035
Ph 02 9349 1569, 02 9349 3968 Fax 02 9349 5836
Botany Bay SEG P5 TP1
maroubraba-p.school@det.nsw.edu.au

Maroubra Junction Public School **(7427)**
Storey St Maroubra 2035
Ph 02 9349 8333, 02 9349 3553 Fax 02 9349 3712
Botany Bay SEG P2 TP1
maroubrajn-p.school@det.nsw.edu.au

Marra Creek Public School **(4454)**
Coolabah to Quambone Rd Marra Creek via Nyngan 2825
Ph 02 6824 4358 Fax 02 6824 4363
Bourke SEG P6 TP8 A 1HL
marracreek-p.school@det.nsw.edu.au

Marrar Public School **(2485)**
Centenary Drive Marrar 2652
Ph 02 6927 4364 Fax 02 6927 4377
Riverina Central SEG P5 TP2 A 9
marrar-p.school@det.nsw.edu.au

Marrickville High School **(8540)**
Northcote St Marrickville 2204
Ph 02 9569 2444, 02 9569 2633 Fax 02 9560 3693
Network 8 SEG S9 TP1
marrickvil-h.school@det.nsw.edu.au

Marrickville Public School **(3952)**
Chapel St Marrickville 2204
Ph 02 9560 2208, 02 9560 3937 Fax 02 9560 5134
Inner City SEG P5 TP1
marrickvil-p.school@det.nsw.edu.au

Marrickville West Public School **(3951)**
Livingstone Rd Marrickville 2204
Ph 02 9558 1137, 02 9558 4380 Fax 02 9559 5961
Inner City SEG P4 TP1
marrickviw-p.school@det.nsw.edu.au

Marsden High School **(8225)**
22a Winbourne St West Ryde 2114
Ph 02 9874 6544 Fax 02 9858 1716
Lane Cove Network SEG S9 TP1
marsden-h.school@det.nsw.edu.au

Marsden Park Public School **(2489)**
Garfield Rd West Marsden Park 2765
Ph 02 9627 1644 Fax 02 9838 1136
Nirimba SEG P5 TP1
marsdenpk-p.school@det.nsw.edu.au

Marsden Road Public School **(4278)**
Marsden Rd Liverpool 2170
Ph 02 9602 5579, 02 9602 6451 Fax 02 9821 1067
Liverpool SEG P2 TP2
marsdenrd-p.school@det.nsw.edu.au

Martindale Public School **(2492)**
670 Martindale Rd Martindale via Denman 2328
Ph 02 6547 3502 Fax 02 6547 3546
Hunter/Central Coast 8 SEG P6 TP1 A 10
martindale-p.school@det.nsw.edu.au

Martins Creek Public School **(2493)**
Cook St Martins Creek 2420
Ph 02 4938 5239 Fax 02 4938 5423
Hunter/Central Coast 10 SEG P6 TP1
martinscrk-p.school@det.nsw.edu.au

Martins Gully Public School **(2494)**
Bona Vista Rd Armidale 2350
Ph 02 6772 3314 Fax 02 6771 2257
New England Central SEG P4 TP2 A C
martinsgul-p.school@det.nsw.edu.au

Marton Public School **(4431)**
107 Kingswood Rd Engadine 2233
Ph 02 9520 6261, 02 9520 5240 Fax 02 9520 6356
Woronora River SEG P3 TP1
marton-p.school@det.nsw.edu.au

Marulan Public School **(2496)**
63 George St Marulan 2579
Ph 02 4841 1573 Fax 02 4841 1847
Goulburn/Highlands SEG P5 TP1
marulan-p.school@det.nsw.edu.au

Mary Brooksbank School **(5721)**
Anthony & Cleopatra Drives Rosemeadow 2560
Ph 02 4628 4555 Fax 02 4626 8255
Campbelltown SEG SSP4 TP2
marybrooks-s.school@det.nsw.edu.au

Maryland Public School **(4600)**
John T Bell Drive Maryland 2287
Ph 02 4955 9430 Fax 02 4955 8945
Hunter/Central Coast 5 SEG P2 TP1
maryland-p.school@det.nsw.edu.au

Mascot Public School **(2499)**
King St Mascot 2020
Ph 02 9667 4301, 02 9667 4774 Fax 02 9667 4905
Botany Bay SEG P2 TP1
mascot-p.school@det.nsw.edu.au

Mathoura Public School **(2500)**
Frome St Mathoura 2710
Ph 03 5884 3314 Fax 03 5884 3504
Riverina South West SEG P5 TP4 A 10L
mathoura-p.school@det.nsw.edu.au

Matong Public School **(2501)**
Main St Matong 2652
Ph 02 6927 7824 Fax 02 6927 7877
Riverina West SEG P5 TP4 A 8
matong-p.school@det.nsw.edu.au

Matraville Public School **(2502)**
310 Bunnerong Rd Matraville 2036
Ph 02 9311 1783, 02 9661 4783 Fax 02 9661 4076
Botany Bay SEG P4 TP1
matraville-p.school@det.nsw.edu.au

Matraville Soldiers Settlement Public School **(4067)**
Menin Rd Matraville 2036
Ph 02 9311 1175, 02 9311 1870 Fax 02 9661 4232
Botany Bay SEG P3 TP1
matravilss-p.school@det.nsw.edu.au

Matraville Sports High School **(8249)**
Anzac Pde Chifley 2036
Ph 02 9661 8000, 02 9661 8333 Fax 02 9661 4254
Botany Bay SEG S9 TP1
matrasport-h.school@det.nsw.edu.au

Matthew Pearce Public School **(4526)**
Astoria Park Rd Baulkham Hills 2153
Ph 02 9624 3311, 02 9624 3588 Fax 02 9838 8520
The Hills SEG P1 TP1
mattpearce-p.school@det.nsw.edu.au

Mawarra Public School **(4466)**
Macarthur Rd Camden East 2570
Ph 02 4658 0990, 02 4658 0483 Fax 02 4658 0223
Macarthur SEG P3 TP1
mawarra-p.school@det.nsw.edu.au

Mayfield East Public School **(2506)**
32 Crebert Street Mayfield East 2304
Ph 02 4968 1495, 02 4968 2291 Fax 02 4968 3236
Hunter/Central Coast 5 SEG P4 TP1
mayfielde-p.school@det.nsw.edu.au

Mayfield West Public School **(2507)**
Gregson Ave Mayfield 2304
Ph 02 4968 1539, 02 4968 2189 Fax 02 4960 2367
Hunter/Central Coast 5 SEG P3 TP1
mayfieldw-p.school@det.nsw.edu.au

Mayrung Public School **(2508)**
Mayrung Rd Deniliquin 2710
Ph 03 5882 4243 Fax 03 5882 4326
Riverina South West SEG P5 TP4 A 5
mayrung-p.school@det.nsw.edu.au

McCallums Hill Public School **(3886)**
McCallum St Roselands 2196
Ph 02 9759 4396, 02 9759 7684 Fax 02 9740 4245
Inner West SEG P2 TP1
mccallumhi-p.school@det.nsw.edu.au

Meadow Flat Public School **(2509)**
Great Western Hwy Meadow Flat 2795
Ph 02 6359 5259 Fax 02 6359 5265
Bathurst SEG P5 TP1 A C
meadowflat-p.school@det.nsw.edu.au

Meadowbank Public School **(3863)**
Thistle St Ryde 2112
Ph 02 9809 3648 Fax 02 9807 2121
Lane Cove Network SEG P4 TP1
meadowbank-p.school@det.nsw.edu.au

Meadows Public School, The **(2510)**
Fuller St Seven Hills 2147
Ph 02 9631 3737 Fax 02 9896 3281
Nirimba SEG P4 TP2
themeadows-p.school@det.nsw.edu.au

Medlow Public School **(2511)**
Taylors Arm Rd Medlow 2447
Ph 02 6564 2145 Fax 02 6564 2147
Mid North Coast SEG P6 TP2 A 6
medlow-p.school@det.nsw.edu.au

Medowie Public School **(2512)**
Ferodale Rd Medowie 2318
Ph 02 4982 8222 Fax 02 4982 8732
Hunter/Central Coast 10 SEG P3 TP1
medowie-p.school@det.nsw.edu.au

Megalong Public School **(2515)**
Megalong Valley Megalong 2785
Ph 02 4787 9159 Fax 02 4787 9118
Blue Mountains SEG P6 TP1
megalong-p.school@det.nsw.edu.au

Melrose Park Public School **(3846)**
110 Wharf Rd West Ryde 2114
Ph 02 9874 4669 Fax 02 9804 7534
Lane Cove Network SEG P5 TP1
melrosepk-p.school@det.nsw.edu.au

Melville High School **(8566)**
Nicholson St Kempsey 2440
Ph 02 6562 7511 Fax 02 6562 7405
Hastings SEG S9 TP1
melville-h.school@det.nsw.edu.au

Menai High School **(8583)**
40 Gerald Rd Menai 2234
Ph 02 9543 7000 Fax 02 9543 5513
Woronora River SEG S8 TP1
menai-h.school@det.nsw.edu.au

Menai Public School **(2520)**
4R Hall Drive Menai 2234
Ph 02 9543 4924 Fax 02 9543 7363
Woronora River SEG P4 TP1
menai-p.school@det.nsw.edu.au

Mendooran Central School **(2522)**
Brambil St Mendooran 2819
Ph 02 6886 1149 Fax 02 6886 1203
Warrumbungle SEG C4 TP4 A 8
mendooran-c.school@det.nsw.edu.au

Menindee Central School **(2523)**
Menindee St Menindee 2879
Ph 08 8091 4409 Fax 08 8091 4377
Broken Hill SEG C4 TP8 A 2HL
menindee-c.school@det.nsw.edu.au

Merewether Heights Public School **(4416)**
Cedar Cres Merewether Heights 2291
Ph 02 4963 3192 Fax 02 4963 3714
Hunter/Central Coast 5 SEG P4 TP1
merewethht-p.school@det.nsw.edu.au

Merewether High School **(8510)**
Chatham St Broadmeadow 2292
(PO Box 3010 Hamilton Delivery Centre Hamilton 2303)
Ph 02 4969 3855, 02 4969 3973 Fax 02 4961 2246
Hunter/Central Coast 4 SEG S8 TP1
merewether-h.school@det.nsw.edu.au

Merewether Public School **(2525)**
Henry St Merewether 2291
Ph 02 4963 1318, 02 4963 6867 Fax 02 4963 3490
Hunter/Central Coast 4 SEG P4 TP1
merewether-p.school@det.nsw.edu.au

Merimbula Public School **(2526)**
Main St Merimbula 2548
Ph 02 6495 1266 Fax 02 6495 3239
Sapphire Coast/Monaro SEG P2 TP1
merimbula-p.school@det.nsw.edu.au

Merriwa Central School **(2528)**
Bow St Merriwa 2329
Ph 02 6548 2119, 02 6548 2101 Fax 02 6548 2534
Hunter/Central Coast 8 SEG C3 TP2 A 9
merriwa-c.school@det.nsw.edu.au

Merrylands East Public School **(5126)**
Myee St Merrylands 2160
Ph 02 9637 2638, 02 9637 8119 Fax 02 9897 1482
Granville SEG P3 TP1
merrylande-p.school@det.nsw.edu.au

Merrylands High School (8227)
Bristol St Merrylands 2160
Ph 02 9632 9401, 02 9632 2570 Fax 02 9892 2704
Granville SEG S9 TP1
merryland-h.school@det.nsw.edu.au

Merrylands Public School (2531)
Fowler Rd Merrylands 2160
Ph 02 9632 9709, 02 9632 7942 Fax 02 9892 2152
Granville SEG P3 TP1
merryland-p.school@det.nsw.edu.au

Metella Road Public School (4444)
Metella Rd Toongabbie 2146
Ph 02 9636 1922 Fax 02 9896 3201
Nirimba SEG P2 TP1
metellard-p.school@det.nsw.edu.au

Metford Public School (4521)
Melaleuca Close Metford 2323
Ph 02 4933 2655 Fax 02 4933 2164
Hunter/Central Coast 9 SEG P3 TP1
metford-p.school@det.nsw.edu.au

Mian School (5577)
Bultje St Dubbo 2830
(PO Box 865 Dubbo 2830)
Ph 02 6884 8491 Fax 02 6882 9190
Dubbo SEG SSP5 TP1
mian-s.school@det.nsw.edu.au

Michelago Public School (2540)
Queanbeyan Rd Michelago 2620
Ph 02 6235 9153 Fax 02 6235 9034
Queanbeyan SEG P5 TP2 A C
michelago-p.school@det.nsw.edu.au

Middle Dural Public School (2542)
Old Northern Rd Middle Dural 2158
Ph 02 9651 1761 Fax 02 9651 4072
Hornsby Network SEG P5 TP1
middledura-p.school@det.nsw.edu.au

Middle Harbour Public School (2543)
8 Hale Rd Mosman 2088
Ph 02 9953 6232 Fax 02 9904 1443
Middle Harbour Network SEG P3 TP1
middleharb-p.school@det.nsw.edu.au

Middleton Public School (4089)
Medlyn St Parkes 2870
Ph 02 6862 1864, 02 6862 1999 Fax 02 6862 5310
Lachlan SEG P3 TP2
middleton-p.school@det.nsw.edu.au

Milbrodale Public School (2550)
2615 Putty Rd Milbrodale 2330
Ph 02 6574 5163 Fax 02 6574 5201
Hunter/Central Coast 8 SEG P5 TP1
milbrodale-p.school@det.nsw.edu.au

Milbrulong Public School (2551)
The Rock-Lockhart Rd Milbrulong 2656
Ph 02 6920 6213 Fax 02 6920 6264
Riverina Central SEG P6 TP4 A 9
milbrulong-p.school@det.nsw.edu.au

Millbank Public School (2553)
Hickeys Creek Rd Willawarrin 2440
Ph 02 6567 1250 Fax 02 6567 1215
Hastings SEG P6 TP2 A 5
millbank-p.school@det.nsw.edu.au

Miller High School (8394)
Cabramatta Ave Miller 2168
Ph 02 9607 8669, 02 9607 7765 Fax 02 9607 9460
Liverpool SEG S9 TP4
miller-h.school@det.nsw.edu.au

Miller Public School (4338)
Miller Rd & Shropshire St Miller 2168
Ph 02 9607 8293, 02 9607 9617 Fax 02 9608 4692
Liverpool SEG P3 TP4
miller-p.school@det.nsw.edu.au

Millers Forest Public School (2554)
Martins Wharf Rd Millers Forest 2324
Ph 02 4987 2520 Fax 02 4987 4265
Hunter/Central Coast 4 SEG P6 TP1
millersfor-p.school@det.nsw.edu.au

Millfield Public School (2555)
Wollombi Rd Millfield 2325
Ph 02 4998 1331 Fax 02 4998 1719
Hunter/Central Coast 9 SEG P5 TP1
millfield-p.school@det.nsw.edu.au

Millthorpe Public School (2558)
Park St Millthorpe 2798
Ph 02 6366 3104 Fax 02 6366 3230
Orange SEG P4 TP2 A 10
millthorpe-p.school@det.nsw.edu.au

Milperra Public School (2560)
Pozieres Ave Milperra 2214
Ph 02 9773 8419, 02 9773 8112 Fax 02 9773 9463
East Hills SEG P4 TP1
milperra-p.school@det.nsw.edu.au

Milton Public School (2565)
Thomas St Milton 2538
Ph 02 4455 1504 Fax 02 4454 0456
Batemans Bay SEG P2 TP1
milton-p.school@det.nsw.edu.au

Mimosa Public School (4432)
Blackbutts Rd & Mimosa St Frenchs Forest 2086
Ph 02 9451 8049, 02 9451 8607 Fax 02 9975 5039
Middle Harbour Network SEG P4 TP1
mimosa-p.school@det.nsw.edu.au

Minchinbury Public School **(4577)**
McFarlane Drive Minchinbury 2770
Ph 02 9832 1488 Fax 02 9832 1713
Minchinbury SEG P2 TP2
minchinbur-p.school@det.nsw.edu.au

Minerva School **(5616)**
Eton St Sutherland 2232
Ph 02 9521 3439, 02 9521 7569 Fax 02 9545 3316
Port Hacking SEG SSP4 TP1
minerva-s.school@det.nsw.edu.au

Mingoola Public School **(4115)**
Bruxner Hwy Mingoola 2372
Ph 02 6737 5224 Fax 02 6737 5201
New England North SEG P6 TP6 A 3
mingoola-p.school@det.nsw.edu.au

Minmi Public School **(2571)**
Woodford St Minmi 2287
Ph 02 4953 2768 Fax 02 4953 3104
Hunter/Central Coast 5 SEG P5 TP1
minmi-p.school@det.nsw.edu.au

Minnamurra Public School **(4498)**
85 Charles Ave Minnamurra 2533
Ph 02 4237 7501 Fax 02 4237 8393
Shoalhaven SEG P2 TP1
minnamurra-p.school@det.nsw.edu.au

Minto Public School **(2572)**
Pembroke & Redfern Rds Minto 2566
Ph 02 9603 2406, 02 9603 4059 Fax 02 9820 3187
Ingleburn SEG P4 TP2
minto-p.school@det.nsw.edu.au

Miranda North Public School **(4122)**
162B The Boulevarde Miranda 2228
Ph 02 9524 6842, 02 9524 1903 Fax 02 9540 4814
Port Hacking SEG P4 TP1
mirandanth-p.school@det.nsw.edu.au

Miranda Public School **(2574)**
3 Sylva Ave Miranda 2228
(PO Box 846 Miranda 1490)
Ph 02 9524 4631, 02 9524 7727 Fax 02 9540 4793
Port Hacking SEG P4 TP1
miranda-p.school@det.nsw.edu.au

Mitchell High School **(8403)**
Keyworth Drive Blacktown 2148
Ph 02 9622 8926, 02 9622 9944 Fax 02 9831 2805
Nirimba SEG S8 TP2
mitchell-h.school@det.nsw.edu.au

Mitchells Island Public School **(2580)**
Mitchells Island 2430
Ph 02 6553 2623 Fax 02 6553 2600
Manning Camden Haven SEG P5 TP1 A 9
mitchellsi-p.school@det.nsw.edu.au

Mittagong Public School **(2581)**
21 Pioneer St Mittagong 2575
(PO Box 741 Mittagong 2575)
Ph 02 4871 1020, 02 4871 1579 Fax 02 4872 1460
Goulburn/Highlands SEG P3 TP1
mittagong-p.school@det.nsw.edu.au

Moama Public School **(2584)**
Simms St Moama 2731
Ph 03 5482 1564 Fax 03 5480 6460
Riverina South West SEG P4 TP2 A L
moama-p.school@det.nsw.edu.au

Modanville Public School **(2585)**
Dunoon Rd Lismore 2480
Ph 02 6628 2234 Fax 02 6628 2334
The Wilson SEG P5 TP1 A 10
modanville-p.school@det.nsw.edu.au

Model Farms High School **(8499)**
Gooden Drive Baulkham Hills 2153
Ph 02 9624 3133 Fax 02 9838 8407
The Hills SEG S8 TP1
modelfarms-h.school@det.nsw.edu.au

Mogo Public School **(2586)**
Princes Hwy Mogo 2536
Ph 02 4474 4815 Fax 02 4474 4806
Batemans Bay SEG P5 TP1 A 10
mogo-p.school@det.nsw.edu.au

Molong Central School **(2590)**
Phillip St Molong 2866
Ph 02 6366 8224 Fax 02 6366 8220
Orange SEG C1 TP2
molong-c.school@det.nsw.edu.au

Mona Vale Public School **(2593)**
Waratah St Mona Vale 2103
Ph 02 9999 3481, 02 9999 2121 Fax 02 9997 8446
Peninsula Network SEG P1 TP1
monavale-p.school@det.nsw.edu.au

Monaro High School **(8196)**
Mittagong Rd Cooma North 2629
Ph 02 6452 4611, 02 6452 4660 Fax 02 6452 3629
Sapphire Coast/Monaro SEG S9 TP2 A C
monaro-h.school@det.nsw.edu.au

Monteagle Public School **(2599)**
Murringo St Monteagle 2594
Ph 02 6383 6207 Fax 02 6383 6286
Riverina North SEG P5 TP2 A 9
monteagle-p.school@det.nsw.edu.au

Moonbi Public School **(2608)**
New England Hwy Moonbi 2353
Ph 02 6760 3151 Fax 02 6760 3871
New England Central SEG P5 TP1 A 8
moonbi-p.school@det.nsw.edu.au

Moorebank High School (8501)
Bangalow Ave Moorebank 2170
Ph 02 9601 3999, 02 9601 3766 Fax 02 9822 5096
East Hills SEG S9 TP1
moorebank-h.school@det.nsw.edu.au

Moorefield Girls High School (8241)
Princes Hwy Kogarah 2217
Ph 02 9587 6095, 02 9587 7646 Fax 02 9588 2112
Georges River SEG S9 TP1
moorefielg-h.school@det.nsw.edu.au

Moorland Public School (2616)
Church St Moorland 2443
Ph 02 6556 5151 Fax 02 6556 5063
Manning Camden Haven SEG P5 TP1 A 8
moorland-p.school@det.nsw.edu.au

Moree East Public School (4118)
Adelaide St Moree 2400
Ph 02 6752 1798, 02 6752 1733 Fax 02 6752 1553
New England West SEG P4 TP4 A HL
moreeeast-p.school@det.nsw.edu.au

Moree Public School (2618)
Albert St Moree 2400
Ph 02 6752 1913, 02 6752 2640 Fax 02 6752 4016
New England West SEG P2 TP4 A HL
moree-p.school@det.nsw.edu.au

Moree Secondary College Albert St Campus (8325)
Albert St Moree 2400
(PO Box 831 Moree 2400)
Ph 02 6752 1999 Fax 02 6752 1626
New England West SEG S9 TP4 A HL
mscalberts-h.school@det.nsw.edu.au

Moree Secondary College Carol Ave Campus (8471)
Carol Ave Moree East 2400
Ph 02 6752 2833 Fax 02 6752 5447
New England West SEG S9 TP4 A HL
msccarolav-h.school@det.nsw.edu.au

Morgan Street Public School (4232)
482 Morgan St Broken Hill 2880
Ph 08 8087 5155, 08 8087 3340 Fax 08 8087 3729
Broken Hill SEG P3 TP6 A HLY
morganst-p.school@det.nsw.edu.au

Morisset High School (8413)
Bridge St Morisset 2264
Ph 02 4973 1999 Fax 02 4970 5386
Hunter/Central Coast 6 SEG S8 TP1
morisset-h.school@det.nsw.edu.au

Morisset Public School (2621)
Terrigal St Morisset 2264
Ph 02 4973 1435 Fax 02 4970 5939
Hunter/Central Coast 6 SEG P4 TP1
morisset-p.school@det.nsw.edu.au

Morpeth Public School (2623)
High St Morpeth 2321
Ph 02 4933 6726 Fax 02 4934 3021
Hunter/Central Coast 9 SEG P4 TP1
morpeth-p.school@det.nsw.edu.au

Mortdale Public School (2624)
Colebourne Ave Mortdale 2223
Ph 02 9580 5244, 02 9580 5243 Fax 02 9580 7053
Georges River SEG P3 TP1
mortdale-p.school@det.nsw.edu.au

Mortlake Public School (2625)
Brays Rd Concord 2137
Ph 02 9743 3001, 02 9743 3386 Fax 02 9743 0261
Strathfield SEG P4 TP1
mortlake-p.school@det.nsw.edu.au

Moruya High School (8368)
Albert St Moruya 2537
Ph 02 4474 2155 Fax 02 4474 3782
Batemans Bay SEG S9 TP1
moruya-h.school@det.nsw.edu.au

Moruya Public School (2628)
22 Evans St Moruya 2537
Ph 02 4474 2363 Fax 02 4474 2919
Batemans Bay SEG P3 TP1
moruya-p.school@det.nsw.edu.au

Mosman High School (8326)
Military Rd Mosman 2088
Ph 02 9968 1006 Fax 02 9968 1203
Middle Harbour Network SEG S9 TP1
mosman-h.school@det.nsw.edu.au

Mosman Public School (7430)
27 Belmont Rd Mosman 2088
Ph 02 9969 9325, 02 9960 3821 Fax 02 9968 1324
Middle Harbour Network SEG P2 TP1
mosman-p.school@det.nsw.edu.au

Moss Vale High School (8388)
Narellan Rd Moss Vale 2577
Ph 02 4868 1717, 02 4868 1788 Fax 02 4868 2787
Goulburn/Highlands SEG S9 TP1
mossvale-h.school@det.nsw.edu.au

Moss Vale Public School (2631)
Browley St Moss Vale 2577
Ph 02 4868 1866 Fax 02 4869 1116
Goulburn/Highlands SEG P2 TP1
mossvale-p.school@det.nsw.edu.au

Moulamein Public School (2632)
Brougham St Moulamein 2733
(PO Box 125 Moulamein 2733)
Ph 03 5887 5208 Fax 03 5887 5102
Riverina South West SEG P5 TP6 A 7HL
moulamein-p.school@det.nsw.edu.au

Mount Annan High School (8286)
248 Welling Drive Mount Annan 2567
Ph 02 4648 0111 Fax 02 4648 0042
Macarthur SEG S9 TP1
mountannan-h.school@det.nsw.edu.au

Mount Annan Public School (4597)
Stenhouse Drive Mount Annan 2567
Ph 02 4647 2380, 02 4647 2384 Fax 02 4647 2382
Macarthur SEG P2 TP1
mountannan-p.school@det.nsw.edu.au

Mount Austin High School (8407)
Leavenworth Drive Wagga Wagga 2650
(PO Box 91 Mount Austin 2650)
Ph 02 6925 2801 Fax 02 6925 5516
Riverina North SEG S9 TP1
mtaustin-h.school@det.nsw.edu.au

Mount Austin Public School (4215)
Bourke St Mount Austin 2650
(PO BOX 7369 Mount Austin 2650)
Ph 02 6925 2481, 02 6925 2139 Fax 02 6925 3974
Riverina North SEG P3 TP1
mtaustin-p.school@det.nsw.edu.au

Mount Brown Public School (4423)
Mount Brown Rd Dapto 2530
Ph 02 4261 3855 Fax 02 4261 1020
Shellharbour SEG P3 TP1
mountbrown-p.school@det.nsw.edu.au

Mount Colah Public School (3885)
Telopea St Mount Colah 2079
Ph 02 9477 3627, 02 9477 2375 Fax 02 9482 2528
Hornsby Network SEG P3 TP1
mtcolah-p.school@det.nsw.edu.au

Mount Druitt Public School (4290)
Belmore Ave Mount Druitt 2770
Ph 02 9625 9036, 02 9625 8067 Fax 02 9832 2453
Mt Druitt SEG P2 TP4
mtdruitt-p.school@det.nsw.edu.au

Mount George Public School (2637)
Nowendoc Rd Mount George 2424
Ph 02 6550 6555 Fax 02 6550 6417
Lower North Coast SEG P5 TP1 A 8
mtgeorge-p.school@det.nsw.edu.au

Mount Hunter Public School (2640)
165 Burragorang Rd Camden 2570
Ph 02 4654 5266 Fax 02 4654 5485
Macarthur SEG P5 TP1
mthunter-p.school@det.nsw.edu.au

Mount Hutton Public School (3939)
12 Dunkley Pde Mount Hutton 2290
Ph 02 4948 8085 Fax 02 4947 1135
Hunter/Central Coast 7 SEG P4 TP1
mthutton-p.school@det.nsw.edu.au

Mount Kanwary Public School (2641)
145 Hinton Rd Osterley 2324
Ph 02 4987 2596 Fax 02 4987 3281
Hunter/Central Coast 9 SEG P5 TP1
mtkanwary-p.school@det.nsw.edu.au

Mount Keira Public School (2642)
255 Mount Keira Rd Mount Keira 2500
Ph 02 4229 1446 Fax 02 4226 9985
Wollongong SEG P5 TP1
mtkeira-p.school@det.nsw.edu.au

Mount Kembla Public School (2643)
Cordeaux Rd Mount Kembla 2526
Ph 02 4271 2565 Fax 02 4271 4847
Wollongong SEG P4 TP1
mtkembla-p.school@det.nsw.edu.au

Mount Kuring-gai Public School (4049)
Leeming St Mount Kuring-gai 2080
Ph 02 9457 9088 Fax 02 9457 8691
Hornsby Network SEG P4 TP1
mtkuringga-p.school@det.nsw.edu.au

Mount Lewis Infants School (5241)
Noble Ave Greenacre 2190
Ph 02 9790 4650 Fax 02 9790 1067
Bankstown SEG P5 TP1
mtlewisinf-p.school@det.nsw.edu.au

Mount Ousley Public School (4095)
McGrath St Fairy Meadow 2519
Ph 02 4285 4211 Fax 02 4284 3142
Wollongong North SEG P4 TP1
mtousley-p.school@det.nsw.edu.au

Mount Pleasant Public School (2647)
Goorangoola Rd Greenland via Singleton 2330
Ph 02 6577 3129 Fax 02 6577 3103
Hunter/Central Coast 8 SEG P5 TP1
mtpleasant-p.school@det.nsw.edu.au

Mount Pritchard East Public School (4210)
Townview Rd Mount Pritchard 2170
Ph 02 9602 6453, 02 9602 7091 Fax 02 9821 1473
Liverpool SEG P3 TP1
mtpritche-p.school@det.nsw.edu.au

Mount Pritchard Public School (2648)
Meadows Rd Mount Pritchard 2170
Ph 02 9823 9820, 02 9823 8362 Fax 02 9822 5097
Liverpool SEG P3 TP1
mtpritchar-p.school@det.nsw.edu.au

Mount Riverview Public School (4435)
Rusden Rd Blaxland 2774
Ph 02 4739 2180 Fax 02 4739 8322
Blue Mountains SEG P5 TP1
mtrivervie-p.school@det.nsw.edu.au

Mount St Thomas Public School **(3881)**
Taronga Ave Wollongong 2500
Ph 02 4229 2192 Fax 02 4226 5086
Wollongong SEG P3 TP1
mtstthomas-p.school@det.nsw.edu.au

Mount Terry Public School **(4610)**
175 Ashburton Drive Albion Park 2527
(PO Box 34 Albion Park 2527)
Ph 02 4257 4370 Fax 02 4257 4380
Shellharbour SEG P2 TP1
mtterry-p.school@det.nsw.edu.au

Mount Victoria Public School **(2652)**
Great Western Hwy Mount Victoria 2786
Ph 02 4787 1255 Fax 02 4787 1115
Blue Mountains SEG P5 TP1
mtvictoria-p.school@det.nsw.edu.au

Mount View High School **(8574)**
Mount View Rd Cessnock West 2325
Ph 02 4990 2566 Fax 02 4991 1728
Hunter/Central Coast 9 SEG S8 TP1
mountview-h.school@det.nsw.edu.au

Mount Warrigal Public School **(4395)**
Hogarth Ave Warilla 2528
Ph 02 4296 6266 Fax 02 4297 2816
Shellharbour SEG P3 TP1
mtwarrigal-p.school@det.nsw.edu.au

Mowbray Public School **(4015)**
Mowbray Rd West Lane Cove 2066
Ph 02 9428 3200 Fax 02 9418 8027
North Shore Network SEG P4 TP1
mowbray-p.school@det.nsw.edu.au

Mudgee High School **(8128)**
41 Douro St Mudgee 2850
(Locked Bag 2004 Mudgee 2850)
Ph 02 6372 1533 Fax 02 6372 6321
Warrumbungle SEG S8 TP1
mudgee-h.school@det.nsw.edu.au

Mudgee Public School **(2656)**
Perry St Mudgee 2850
Ph 02 6372 2036, 02 6372 1336 Fax 02 6372 6316
Warrumbungle SEG P2 TP1
mudgee-p.school@det.nsw.edu.au

Muirfield High School **(8498)**
Barclay Rd North Rocks 2150
Ph 02 9872 2244 Fax 02 9871 4106
Hills Network SEG S9 TP1
muirfield-h.school@det.nsw.edu.au

Mulbring Public School **(2658)**
Water St Mulbring 2323
Ph 02 4938 0135 Fax 02 4938 0369
Hunter/Central Coast 9 SEG P5 TP1
mulbring-p.school@det.nsw.edu.au

Mulgoa Public School **(2659)**
Mulgoa Rd Mulgoa 2750
Ph 02 4773 8229 Fax 02 4773 9033
Penrith Valley SEG P5 TP1
mulgoa-p.school@det.nsw.edu.au

Mullaley Public School **(2660)**
Nombi St Mullaley 2379
Ph 02 6743 7852 Fax 02 6743 7824
New England South SEG P5 TP4 A 6
mullaley-p.school@det.nsw.edu.au

Mullaway Public School **(4606)**
Old Pacific Hwy Mullaway 2456
Ph 02 6654 0377 Fax 02 6654 2751
Coffs Harbour SEG P4 TP1
mullaway-p.school@det.nsw.edu.au

Mullengandra Public School **(2662)**
Hume Hwy Mullengandra 2644
Ph 02 6020 4227 Fax 02 6020 4270
Riverina South SEG P6 TP2 A 7
mullengand-p.school@det.nsw.edu.au

Mullion Creek Public School **(2664)**
45 Long Point Rd Mullion Creek 2800
Ph 02 6365 8382 Fax 02 6365 8296
Orange SEG P5 TP1 A 9
mullionck-p.school@det.nsw.edu.au

Mullumbimby High School **(8193)**
9 Jubilee Ave Mullumbimby 2482
Ph 02 6684 2600 Fax 02 6684 1993
Southern Cross SEG S8 TP1
mullumbimb-h.school@det.nsw.edu.au

Mullumbimby Public School **(2665)**
Morrison Ave Mullumbimby 2482
Ph 02 6684 2373, 02 6684 2414 Fax 02 6684 1294
Southern Cross SEG P3 TP1
mullumbimb-p.school@det.nsw.edu.au

Mulwala Public School **(2667)**
Mulwala 2647
Ph 03 5744 3462 Fax 03 5743 1130
Riverina South SEG P5 TP2
mulwala-p.school@det.nsw.edu.au

Mulwaree High School **(8468)**
40 McDermott Drive Goulburn 2580
Ph 02 4821 4499 Fax 02 4822 1432
Goulburn/Highlands SEG S9 TP1
mulwaree-h.school@det.nsw.edu.au

Mulyan Public School **(5242)**
Lachlan St Cowra 2794
Ph 02 6342 2531 Fax 02 6341 1254
Lachlan SEG P3 TP1
mulyan-p.school@det.nsw.edu.au

Mumbil Public School (2669)
Apsley Cres Mumbil 2820
Ph 02 6846 7436 Fax 02 6846 7438
Dubbo SEG P6 TP4 A 7
mumbil-p.school@det.nsw.edu.au

Mummulgum Public School (2671)
Bruxner Hwy Mummulgum 2470
Ph 02 6664 7205 Fax 02 6664 7323
Richmond Valley SEG P6 TP2 A 7
mummulgum-p.school@det.nsw.edu.au

Mungindi Central School (2675)
Bucknell St Mungindi 2406
Ph 02 6753 2207 Fax 02 6753 2346
New England West SEG C4 TP8 A 4HL
mungindi-c.school@det.nsw.edu.au

Murrami Public School (2680)
Murrami Rd Murrami 2705
Ph 02 6955 2289 Fax 02 6955 2326
Riverina West SEG P5 TP4 A 8
murrami-p.school@det.nsw.edu.au

Murray Farm Public School (4401)
Tracey Ave Carlingford 2118
Ph 02 9871 5952 Fax 02 9872 1301
Hills Network SEG P1 TP1
murrayfarm-p.school@det.nsw.edu.au

Murray High School (8505)
Kaitlers Rd Lavington 2641
Ph 02 6025 4711 Fax 02 6025 1367
Riverina South SEG S8 TP1
murray-h.school@det.nsw.edu.au

Murringo Public School (2681)
91 Boorowa St Murringo 2586
Ph 02 6384 6351 Fax 02 6384 6322
Riverina North SEG P5 TP2 A 7
murringo-p.school@det.nsw.edu.au

Murrumburrah High School (8328)
Smith St Harden 2587
(PO Box 66 Harden 2587)
Ph 02 6386 2755 Fax 02 6386 3048
Riverina North SEG S9 TP2
murrumburr-h.school@det.nsw.edu.au

Murrumburrah Public School (2685)
Albury St Murrumburrah 2587
Ph 02 6386 2209 Fax 02 6386 2993
Riverina North SEG P4 TP2
murrumburr-p.school@det.nsw.edu.au

Murrurundi Public School (2686)
Mayne St Murrurundi 2338
Ph 02 6546 6057 Fax 02 6546 6596
Hunter/Central Coast 8 SEG P5 TP2 A 9
murrurundi-p.school@det.nsw.edu.au

Murwillumbah East Public School (4101)
Charles St Murwillumbah 2484
Ph 02 6672 6781, 02 6672 1640 Fax 02 6672 5583
Far North Coast SEG P3 TP1
murwillume-p.school@det.nsw.edu.au

Murwillumbah High School (8129)
Riverview St Murwillumbah 2484
Ph 02 6672 1566 Fax 02 6672 5510
Far North Coast SEG S9 TP1
murwillumb-h.school@det.nsw.edu.au

Murwillumbah Public School (2687)
Prince St Murwillumbah 2484
Ph 02 6672 1467 Fax 02 6672 1008
Far North Coast SEG P4 TP1
murwillumb-p.school@det.nsw.edu.au

Murwillumbah South Infants School (5172)
River St Murwillumbah South 2484
Ph 02 6672 1323 Fax 02 6672 5859
Far North Coast SEG P5 TP1
murwillums-p.school@det.nsw.edu.au

Muswellbrook High School (8164)
King St Muswellbrook 2333
Ph 02 6543 1033 Fax 02 6543 3927
Hunter/Central Coast 8 SEG S9 TP1
muswellbro-h.school@det.nsw.edu.au

Muswellbrook Public School (2688)
Roger St Muswellbrook 2333
Ph 02 6543 2500, 02 6543 2289 Fax 02 6543 3378
Hunter/Central Coast 8 SEG P2 TP1
muswellbro-p.school@det.nsw.edu.au

Muswellbrook South Public School (3876)
Maitland St Muswellbrook 2333
Ph 02 6543 1896 Fax 02 6543 3475
Hunter/Central Coast 8 SEG P3 TP1
muswellbrs-p.school@det.nsw.edu.au

Nabiac Public School (2695)
Clarkson St Nabiac 2312
Ph 02 6554 1247 Fax 02 6554 1522
Lower North Coast SEG P4 TP1 A 8
nabiac-p.school@det.nsw.edu.au

Nambucca Heads High School (8595)
Centenary Drive Nambucca Heads 2448
Ph 02 6568 6777 Fax 02 6568 8318
Mid North Coast SEG S9 TP1
nambuccahd-h.school@det.nsw.edu.au

Nambucca Heads Public School (2696)
Ridge St Nambucca Heads 2448
Ph 02 6568 6411 Fax 02 6568 8205
Mid North Coast SEG P4 TP1
nambuccahd-p.school@det.nsw.edu.au

Nana Glen Public School (2698)
Coffs Harbour-Grafton Rd Nana Glen 2450
Ph 02 6654 3202 Fax 02 6654 3549
Coffs Harbour SEG P5 TP1 A 7
nanaglen-p.school@det.nsw.edu.au

Nangus Public School (2699)
Gundagai-Junee Rd Nangus 2722
Ph 02 6944 7221 Fax 02 6944 7258
Riverina East SEG P6 TP2 A 8
nangus-p.school@det.nsw.edu.au

Nanima Public School (2700)
Aboriginal Village via Pierce St Wellington 2820
(PO Box 79 Wellington 2820)
Ph 02 6845 2179 Fax 02 6845 2265
Dubbo SEG P6 TP4 A 10
nanima-p.school@det.nsw.edu.au

Naradhan Public School (2701)
Kooba St Naradhan 2669
Ph 02 6896 9808 Fax 02 6896 9852
Riverina North West SEG P6 TP6 A 4HL
naradhan-p.school@det.nsw.edu.au

Narara Public School (2703)
Newling St Lisarow 2250
Ph 02 4328 3024 Fax 02 4329 1472
Hunter/Central Coast 3 SEG P3 TP1
narara-p.school@det.nsw.edu.au

Narara Valley High School (8591)
Cnr Fountains & Pandala Rds Narara 2250
Ph 02 4329 3780 Fax 02 4328 3609
Hunter/Central Coast 2 SEG S9 TP1
nararavaly-h.school@det.nsw.edu.au

Nareena Hills Public School (4500)
Jacaranda Ave Figtree 2525
Ph 02 4226 3867 Fax 02 4226 5087
Wollongong SEG P4 TP1
nareenahil-p.school@det.nsw.edu.au

Narellan Public School (2704)
Hume Hwy Narellan 2567
(PO Box 66 Narellan 2567)
Ph 02 4646 1223 Fax 02 4647 1551
Macarthur SEG P4 TP1
narellan-p.school@det.nsw.edu.au

Narellan Vale Public School (4621)
Waterworth Drive Narellan Vale 2567
Ph 02 4647 5291 Fax 02 4647 4507
Macarthur SEG P1 TP1
narellanva-p.school@det.nsw.edu.au

Naremburn School (5578)
250 Willoughby Rd Naremburn 2065
Ph 02 9906 8498 Fax 02 9906 8410
North Shore Network SEG SSP5 TP1
naremburn-s.school@det.nsw.edu.au

Narooma High School (8536)
Princes Hwy Narooma 2546
Ph 02 4476 4377, 02 4476 4075 Fax 02 4476 3953
Batemans Bay SEG S9 TP1
narooma-h.school@det.nsw.edu.au

Narooma Public School (2758)
7 Montague St Narooma 2546
(PO Box 595 Narooma 2546)
Ph 02 4476 2556 Fax 02 4476 2264
Batemans Bay SEG P3 TP1
narooma-p.school@det.nsw.edu.au

Narrabeen Lakes Public School (2706)
1299 Pittwater Rd Narrabeen 2101
Ph 02 9913 7077 Fax 02 9913 3754
Peninsula Network SEG P4 TP1
narrablks-p.school@det.nsw.edu.au

Narrabeen North Public School (3906)
Namona St Narrabeen North 2101
Ph 02 9913 7928, 02 9913 7969 Fax 02 9913 7873
Peninsula Network SEG P3 TP1
narranorth-p.school@det.nsw.edu.au

Narrabeen Sports High School (8512)
10 Namona St Narrabeen North 2101
Ph 02 9913 7820, 02 9913 7906 Fax 02 9913 3526
Peninsula Network SEG S9 TP1
narrabeen-h.school@det.nsw.edu.au

Narrabri High School (8170)
Gibbons St Narrabri 2390
Ph 02 6792 1633 Fax 02 6792 3934
New England West SEG S9 TP4 A L
narrabri-h.school@det.nsw.edu.au

Narrabri Public School (2708)
Barwan St Narrabri 2390
Ph 02 6792 2246, 02 6792 1684 Fax 02 6792 4160
New England West SEG P3 TP4 A L
narrabri-p.school@det.nsw.edu.au

Narrabri West Public School (2709)
6 Cooma Rd Narrabri 2390
(PO Box 121W Narrabri 2390)
Ph 02 6792 2377, 02 6792 2397 Fax 02 6792 4395
New England West SEG P4 TP4 A L
narrabriw-p.school@det.nsw.edu.au

Narrandera East Infants School (4214)
Elizabeth St Narrandera 2700
Ph 02 6959 1858 Fax 02 6959 1756
Riverina West SEG P5 TP4
narrandere-p.school@det.nsw.edu.au

Narrandera High School (8157)
Elizabeth St Narrandera 2700
(PO Box 34 Narrandera NSW 2700)
Ph 02 6959 1744 Fax 02 6959 3297
Riverina West SEG S9 TP4 A C
narrandera-h.school@det.nsw.edu.au

Narrandera Public School (2710)
Adam St Narrandera 2700
Ph 02 6959 2144 Fax 02 6959 3274
Riverina West SEG P4 TP4
narrandera-p.school@det.nsw.edu.au

Narranga Public School (4404)
Robin St Coffs Harbour 2450
Ph 02 6652 1106, 02 6652 1213 Fax 02 6651 1196
Coffs Harbour SEG P2 TP1
narranga-p.school@det.nsw.edu.au

Narraweena Public School (3827)
McIntosh Rd Dee Why 2099
Ph 02 9971 5778, 02 9971 5776 Fax 02 9982 5594
Middle Harbour Network SEG P3 TP1
narraween-p.school@det.nsw.edu.au

Narromine High School (8462)
Merilba St Narromine 2821
(PO Box 129 Narromine 2821)
Ph 02 6889 1499 Fax 02 6889 1553
Dubbo SEG S9 TP2
narromine-h.school@det.nsw.edu.au

Narromine Public School (2713)
Meryula St Narromine 2821
(PO Box 152 Narromine 2821)
Ph 02 6889 4566 Fax 02 6889 4451
Dubbo SEG P3 TP2
narromine-p.school@det.nsw.edu.au

Narwee Public School (3875)
Broadarrow Rd Narwee 2209
Ph 02 9153 9756, 02 9153 5578 Fax 02 9153 8729
East Hills SEG P4 TP1
narwee-p.school@det.nsw.edu.au

Nashdale Public School (2714)
Cargo Rd Nashdale 2800
Ph 02 6365 3161 Fax 02 6365 3327
Orange SEG P5 TP2
nashdale-p.school@det.nsw.edu.au

Nemingha Public School (2725)
145 Nundle Rd Nemingha 2340
(RMB 111A Nundle Rd Tamworth 2340)
Ph 02 6760 9225 Fax 02 6760 9479
New England Central SEG P5 TP1 A 10
nemingha-p.school@det.nsw.edu.au

Nepean High School (8383)
Great Western Hwy Emu Plains 2750
Ph 02 4728 7200, 02 4735 5600 Fax 02 4735 6141
Blue Mountains SEG S9 TP2
nepean-h.school@det.nsw.edu.au

Neutral Bay Public School (2730)
Ben Boyd Rd Neutral Bay 2089
Ph 02 9953 1798, 02 9953 5839 Fax 02 9904 1479
Middle Harbour Network SEG P2 TP1
neutralbay-p.school@det.nsw.edu.au

Neville Public School (2732)
Crouch St Neville 2799
Ph 02 6368 8488 Fax 02 6368 8485
Orange SEG P5 TP4 A 9C
neville-p.school@det.nsw.edu.au

New Lambton Heights Infants School (5247)
176 Lookout Rd New Lambton Heights 2305
Ph 02 4957 2744 Fax 02 4956 2432
Hunter/Central Coast 5 SEG P5 TP1
newlambhti-p.school@det.nsw.edu.au

New Lambton Public School (2738)
Regent St New Lambton 2305
(PO Box 320 New Lambton 2305)
Ph 02 4957 1511, 02 4957 1673 Fax 02 4956 1695
Hunter/Central Coast 5 SEG P2 TP1
newlambton-p.school@det.nsw.edu.au

New Lambton South Public School (3798)
St James Rd New Lambton 2305
Ph 02 4957 1168, 02 4957 2368 Fax 02 4956 2458
Hunter/Central Coast 5 SEG P3 TP1
newlambtos-p.school@det.nsw.edu.au

Newbridge Heights Public School (4499)
Lewin & Magree Cres Moorebank 2170
Ph 02 9601 6130, 02 9601 6128 Fax 02 9822 5098
East Hills SEG P2 TP1
newbridght-p.school@det.nsw.edu.au

Newbridge Public School (2733)
Trunkey St Newbridge 2795
Ph 02 6368 1042 Fax 02 6368 1107
Orange SEG P6 TP2 A 9C
newbridge-p.school@det.nsw.edu.au

Newcastle East Public School (2736)
Tyrrell St Newcastle 2300
Ph 02 4929 2911 Fax 02 4929 6835
Hunter/Central Coast 4 SEG P4 TP1
newcastlee-p.school@det.nsw.edu.au

Newcastle High School (8509)
Park Way Ave Hamilton 2303
Ph 02 4969 3177, 02 4969 3773 Fax 02 4961 2912
Hunter/Central Coast 4 SEG S8 TP1
newcastle-h.school@det.nsw.edu.au

Newcastle School (5658)
Cnr Union & Laman Sts Cooks Hill 2300
Ph 02 4929 1663 Fax 02 4929 2319
Hunter/Central Coast 4 SEG SSP5 TP1
newcastle-s.school@det.nsw.edu.au

Newington Public School (4627)
Newington Boulevarde Newington 2127
Ph 02 9748 7933 Fax 02 9748 3120
Strathfield SEG P3 TP1
newington-p.school@det.nsw.edu.au

Newling Public School (4478)
80 Chapel St Armidale 2350
Ph 02 6772 1488 Fax 02 6771 2258
New England Central SEG P4 TP1 A C
newling-p.school@det.nsw.edu.au

Newport Public School (2740)
Stuart St Newport 2106
Ph 02 9999 3588, 02 9999 4100 Fax 02 9979 6928
Peninsula Network SEG P1 TP1
newport-p.school@det.nsw.edu.au

Newrybar Public School (2741)
Pacific Hwy Newrybar 2479
Ph 02 6687 1343 Fax 02 6687 2072
Southern Cross SEG P5 TP1
newrybar-p.school@det.nsw.edu.au

Newtown High School of Performing Arts (8530)
King St Newtown 2042
(PO Box 785 Newtown 2042)
Ph 02 9519 1544 Fax 02 9519 1657
Inner City SEG S9 TP1
newtown-h.school@det.nsw.edu.au

Newtown North Public School (2744)
Carillon Ave Newtown 2042
Ph 02 9517 1110 Fax 02 9550 4607
Inner City SEG P4 TP1
newtownn-p.school@det.nsw.edu.au

Newtown Public School (7431)
Norfolk St Newtown 2042
Ph 02 9557 4862 Fax 02 9550 6078
Inner City SEG P4 TP1
newtown-p.school@det.nsw.edu.au

Niagara Park Public School (4427)
Narara Valley Drive Niagara Park 2250
Ph 02 4328 3397 Fax 02 4329 1420
Hunter/Central Coast 2 SEG P2 TP1
niagarapk-p.school@det.nsw.edu.au

Niangala Public School (2748)
Foster Street Niangala 2354
Ph 02 6769 2254 Fax 02 6769 2287
New England Central SEG P6 TP6 A 4C
niangala-p.school@det.nsw.edu.au

Nicholson Street Public School (2749)
Nicholson St Balmain East 2041
Ph 02 9810 2863 Fax 02 9555 7378
Port Jackson SEG P5 TP1
nicholson-p.school@det.nsw.edu.au

Niland School (5643)
Niland Cres Blackett 2770
Ph 02 9628 6885, 02 9628 7356 Fax 02 9628 1550
Mt Druitt SEG SSP4 TP4
niland-s.school@det.nsw.edu.au

Nillo Infants School (5128)
Belmore Rd Lorn via Maitland 2320
Ph 02 4933 5323 Fax 02 4934 5074
Hunter/Central Coast 10 SEG P5 TP1
nilloinf-p.school@det.nsw.edu.au

Nimbin Central School (2751)
23a Thorburn St Nimbin 2480
Ph 02 6689 1355 Fax 02 6689 1035
The Wilson SEG C3 TP1 A 8
nimbin-c.school@det.nsw.edu.au

Nimmitabel Public School (2752)
Wolfe St Nimmitabel 2631
Ph 02 6454 6205 Fax 02 6454 6405
Sapphire Coast/Monaro SEG P5 TP2 A 9C
nimmitabel-p.school@det.nsw.edu.au

Nords Wharf Public School (2759)
33 Marine Pde Nords Wharf 2281
Ph 02 4976 1257 Fax 02 4972 5046
Hunter/Central Coast 7 SEG P5 TP1
nordswharf-p.school@det.nsw.edu.au

Norfolk Island Central School (1327)
Cascade & Collins Head Rds Norfolk Island 2899
(PO Box 214 Norfolk Island 2899)
Ph 0011 6723 23000 Fax 0011 6723 23100
Southern Cross SEG 2* TP1
norfolkisl-c.school@det.nsw.edu.au

Normanhurst Boys High School (8211)
Pennant Hills Rd Normanhurst 2076
Ph 02 9489 1077 Fax 02 9489 5722
Hornsby Network SEG S9 TP1
normanhurb-h.school@det.nsw.edu.au

Normanhurst Public School (2760)
Normanhurst Rd Normanhurst 2076
Ph 02 9489 1152, 02 9489 6598 Fax 02 9489 3257
Hornsby Network SEG P4 TP1
normanhurs-p.school@det.nsw.edu.au

Normanhurst West Public School (4275)
Dartford Rd Thornleigh 2120
Ph 02 9484 4252, 02 9484 7359 Fax 02 9484 7354
Hornsby Network SEG P3 TP1
normanhurw-p.school@det.nsw.edu.au

NORTH
Most schools whose name includes NORTH are listed under the main name, eg for NORTH CURL CURL see CURL CURL NORTH. The exceptions are listed below.

North East Public School of Distance Education (4643)
School St Port Macquarie 2444
Ph 02 6584 1118 Fax 02 6584 1210
Hastings SEG P3 TP1
northeast-d.school@det.nsw.edu.au

North Gosford Learning Centre **(5760)**
20 Jarrett Street North Gosford 2250
(PO Box 9188 Wyoming 2250)
Ph 02 4323 2800 Fax 02 4323 1611
Hunter/Central Coast 1 SEG SSP5 TP1
ngosfordlc-s.school@det.nsw.edu.au

North Haven Public School **(4149)**
Ocean Drive North Haven 2443
Ph 02 6559 9261 Fax 02 6559 6475
Manning Camden Haven SEG P3 TP1
northhaven-p.school@det.nsw.edu.au

North Nowra Public School **(4618)**
Judith Drive North Nowra 2541
Ph 02 4422 7045 Fax 02 4422 9035
Shoalhaven SEG P4 TP1
northnowra-p.school@det.nsw.edu.au

North Rocks Public School **(2764)**
359 North Rocks Rd North Rocks 2151
Ph 02 9871 1772, 02 9871 1622 Fax 02 9872 1448
Hills Network SEG P2 TP1
northrocks-p.school@det.nsw.edu.au

North Ryde Public School **(3022)**
Coxs Rd North Ryde 2113
Ph 02 9878 1673, 02 9878 1008 Fax 02 9887 2757
Lane Cove Network SEG P4 TP1
northryde-p.school@det.nsw.edu.au

North Star Public School **(2765)**
Edward St North Star 2408
Ph 07 4676 3128 Fax 07 4676 3269
New England West SEG P5 TP6 A 5HL
northstar-p.school@det.nsw.edu.au

North Sydney Boys High School **(8132)**
Falcon St Crows Nest 2065
Ph 02 9955 1565, 02 9955 4748 Fax 02 9957 6310
Lane Cove Network SEG S8 TP1
northsydbo-h.school@det.nsw.edu.au

North Sydney Girls High School **(8133)**
Pacific Hwy Crows Nest 2065
Ph 02 9922 6666 Fax 02 9957 5098
Lane Cove Network SEG S8 TP1
northsydgi-h.school@det.nsw.edu.au

North Sydney Public School **(2766)**
Bay Rd Waverton 2060
Ph 02 9955 2822, 02 9955 6452 Fax 02 9956 6801
Lane Cove Network SEG P2 TP1
nthsyddem-p.school@det.nsw.edu.au

North Wagga Public School **(3332)**
Hampden Ave Wagga Wagga 2650
Ph 02 6921 3533 Fax 02 6921 3459
Riverina Central SEG P4 TP1
northwagga-p.school@det.nsw.edu.au

Northbridge Public School **(2761)**
Sailors Bay Rd Northbridge 2063
Ph 02 9958 5348, 02 9958 7122 Fax 02 9967 2169
Middle Harbour Network SEG P3 TP1
northbridg-p.school@det.nsw.edu.au

Northern Beaches Secondary College Balgowlah Boys Campus **(8851)**
Maretimo St Balgowlah 2093
Ph 02 9949 4200 Fax 02 9907 0266
Peninsula Network SEG S9 TP1
nbscbalgb-h.school@det.nsw.edu.au

Northern Beaches Secondary College Cromer Campus **(8511)**
South Creek Rd Cromer 2099
Ph 02 9981 1155, 02 9981 1355 Fax 02 9982 5398
Peninsula Network SEG S9 TP1
nbsccromer-h.school@det.nsw.edu.au

Northern Beaches Secondary College Freshwater Campus **(8568)**
Harbord Rd Harbord 2096
Ph 02 9905 2634 Fax 02 9905 2677
Peninsula Network SEG S9 TP1
nbscfreshw-h.School@det.nsw.edu.au

Northern Beaches Secondary College Mackellar Girls Campus **(8831)**
Campbell Pde & Quirk Rd Manly Vale 2093
Ph 02 9949 2083, 02 9949 2160 Fax 02 9949 3028
Peninsula Network SEG S9 TP1
nbscmgirls-h.school@det.nsw.edu.au

Northern Beaches Secondary College Manly Campus **(8567)**
138 Abbott Rd North Curl Curl 2099
Ph 02 9905 3982, 02 9905 3827 Fax 02 9905 7772
Peninsula Network SEG S9 TP1
nbscmanlys-h.school@det.nsw.edu.au

Northlakes High School **(8547)**
Brava Ave San Remo 2262
Ph 02 4390 0555 Fax 02 4399 1792
Hunter/Central Coast 1 SEG S8 TP1
northlake-h.school@det.nsw.edu.au

Northlakes Public School **(4588)**
Goorama Ave San Remo 2262
Ph 02 4399 2071 Fax 02 4399 1935
Hunter/Central Coast 1 SEG P2 TP1
northlake-p.school@det.nsw.edu.au

Northmead High School **(8229)**
Campbell St Northmead 2152
Ph 02 9630 3793, 02 9630 4116 Fax 02 9630 2769
The Hills SEG S9 TP1
northmead-h.school@det.nsw.edu.au

Northmead Public School **(2763)**
Moxhams Rd Northmead 2152
Ph 02 9630 3133, 02 9630 3144 Fax 02 9890 1796
The Hills SEG P2 TP1
northmead-p.school@det.nsw.edu.au

Noumea Public School (4493)
Noumea St Shalvey 2770
Ph 02 9628 7220, 02 9628 7777 Fax 02 9628 1572
Mt Druitt SEG P2 TP4
noumea-p.school@det.nsw.edu.au

Nowendoc Public School (2768)
Walcha Rd Nowendoc 2354
Ph 02 6777 0905 Fax 02 6777 0947
New England Central SEG P6 TP6 A 3
nowendoc-p.school@det.nsw.edu.au

Nowra East Public School (4256)
Jervis St Nowra East 2541
Ph 02 4421 3539, 02 4421 2147 Fax 02 4423 2686
Shoalhaven SEG P3 TP1
nowraeast-p.school@det.nsw.edu.au

Nowra High School (8201)
Moss St Nowra 2541
Ph 02 4421 4977 Fax 02 4421 3284
Shoalhaven SEG S8 TP1
nowra-h.school@det.nsw.edu.au

Nowra Hill Public School (4106)
Naval Air Station Nowra 2541
(PO Box 7004 Nowra Naval 2540)
Ph 02 4421 5671 Fax 02 4423 2148
Shoalhaven SEG P5 TP1
nowrahill-p.school@det.nsw.edu.au

Nowra Public School (2769)
Plunkett St Nowra 2541
Ph 02 4422 0401, 02 4422 0414 Fax 02 4423 2237
Shoalhaven SEG P2 TP1
nowra-p.school@det.nsw.edu.au

Nulkaba Public School (2771)
O'Connor's Rd & Branxton St Cessnock 2325
Ph 02 4990 1805 Fax 02 4991 1408
Hunter/Central Coast 9 SEG P3 TP1
nulkaba-p.school@det.nsw.edu.au

Numeralla Public School (2778)
9 Richardson St Numeralla 2630
Ph 02 6453 3211 Fax 02 6453 3242
Sapphire Coast/Monaro SEG P6 TP2 A 9C
numeralla-p.school@det.nsw.edu.au

Nundle Public School (2781)
93-97 Jenkins Street Nundle 2340
Ph 02 6769 3253 Fax 02 6769 3128
New England South SEG P5 TP4 A 8
nundle-p.school@det.nsw.edu.au

Nuwarra Public School (4420)
McKay Ave Moorebank 2170
Ph 02 9601 2864, 02 9601 1990 Fax 02 9602 0656
East Hills SEG P3 TP1
nuwarra-p.school@det.nsw.edu.au

Nymboida Public School (2784)
Armidale Rd Nymboida 2460
Ph 02 6649 4137 Fax 02 6649 4238
Clarence SEG P5 TP1 A 5
nymboida-p.school@det.nsw.edu.au

Nyngan High School (8353)
Cobar St Nyngan 2825 (PO Box 156 Nyngan 2825)
Ph 02 6832 1004 Fax 02 6832 1769
Bourke SEG S9 TP6 A 10HL
nyngan-h.school@det.nsw.edu.au

Nyngan Public School (2785)
Cathundral St Nyngan 2825
Ph 02 6832 1605, 02 6832 1704 Fax 02 6832 1836
Bourke SEG P4 TP6 A 10HL
nyngan-p.school@det.nsw.edu.au

Oak Flats High School (8906)
The Esplanade Oak Flats 2529
Ph 02 4256 1888 Fax 02 4257 1825
Shellharbour SEG S9 TP1
oakflats-h.school@det.nsw.edu.au

Oak Flats Public School (3860)
Griffiths St Oak Flats 2529
Ph 02 4256 1405 Fax 02 4256 1800
Shellharbour SEG P2 TP1
oakflats-p.school@det.nsw.edu.au

Oakdale Public School (2789)
Burragorang Rd Oakdale 2570
Ph 02 4659 6251 Fax 02 4659 6400
Macarthur SEG P4 TP1
oakdale-p.school@det.nsw.edu.au

Oakhill Drive Public School (4604)
Oakhill Drive Castle Hill 2154
Ph 02 9634 1033 Fax 02 9634 4285
Hills Network SEG P2 TP1
oakhilldr-p.school@det.nsw.edu.au

Oaklands Central School (2791)
Coreen St Oaklands 2646
Ph 02 6035 4290 Fax 02 6035 4382
Riverina South West SEG C4 TP6 A 9
oaklands-c.school@det.nsw.edu.au

Oaks Public School, The (2793)
Burragorang St The Oaks 2570
Ph 02 4657 1185 Fax 02 4657 1704
Macarthur SEG P3 TP1
theoaks-p.school@det.nsw.edu.au

Oakville Public School (2794)
Ogden Rd Oakville 2765
Ph 02 4572 3142, 02 4572 3066 Fax 02 4572 3822
Hawkesbury SEG P3 TP1
oakville-p.school@det.nsw.edu.au

Oatlands Public School (4071)
Belmore St East Oatlands 2117
Ph 02 9630 3486 Fax 02 9890 1914
Cumberland SEG P4 TP1
oatlands-p.school@det.nsw.edu.au

Oatley Public School (2796)
Letitia St Oatley 2223
Ph 02 9580 5519 Fax 02 9580 8752
Georges River SEG P3 TP1
oatley-p.school@det.nsw.edu.au

Oatley West Public School (3797)
Oatley Park Ave Oatley 2223
Ph 02 9580 5048, 02 9580 4800 Fax 02 9580 6372
Georges River SEG P3 TP1
oatleywest-p.school@det.nsw.edu.au

Oberon High School (8598)
Ross St Oberon 2787
Ph 02 6336 1606 Fax 02 6336 2164
Bathurst SEG S9 TP2 A C
oberon-h.school@det.nsw.edu.au

Oberon Public School (2797)
Dart St Oberon 2787
(PO Box 410 Oberon 2787)
Ph 02 6336 0093 Fax 02 6336 0095
Bathurst SEG P4 TP2 A C
oberon-p.school@det.nsw.edu.au

Observatory Hill Environmental Education Centre (5745)
Upper Fort St Observatory Hill Millers Point 2000
(PO Box 43)
Ph 02 9247 7321 Fax 02 9247 4787
Port Hacking SEG EEC2 TP1
observhill-e.school@det.nsw.edu.au

Ocean Shores Public School (1227)
166 Shara Boulevarde Ocean Shores North 2483
Ph 02 6680 2766 Fax 02 6680 2764
Southern Cross SEG P3 TP1
oceanshore-p.school@det.nsw.edu.au

O'Connell Public School (2798)
15 Black's Mill Lane O'Connell 2795
Ph 02 6337 5725 Fax 02 6337 5638
Bathurst SEG P5 TP1 A C
oconnell-p.school@det.nsw.edu.au

Old Bar Public School (2799)
David St Old Bar 2430
Ph 02 6553 7248 Fax 02 6553 3038
Manning Camden Haven SEG P3 TP1 A 10
oldbar-p.school@det.nsw.edu.au

Old Bonalbo Public School (2800)
Duck Creek Rd Old Bonalbo 2470
Ph 02 6665 3124 Fax 02 6665 3153
Richmond Valley SEG P5 TP2 A 5
oldbonalbo-p.school@det.nsw.edu.au

Old Guildford Public School (2801)
Woodville Rd Guildford 2161
Ph 02 9632 8286, 02 9632 6776 Fax 02 9892 1987
Granville SEG P4 TP1
oldguildfo-p.school@det.nsw.edu.au

Open High School (8588)
78 Avoca St Randwick 2031
(Locked Bag 88 Strawberry Hills 2012)
Ph 02 9381 4800 Fax 02 9381 4950
Network 8 SEG S9 TP1
theopenhs-d.school@det.nsw.edu.au

Orama Public School (4534)
1098 Darkwood Rd Thora 2454
(PO Box 237 Bellingen 2454)
Ph 02 6655 8567 Fax 02 6655 8637
Mid North Coast SEG P5 TP1 A 7
orama-p.school@det.nsw.edu.au

Orana Heights Public School (4549)
Oak St Dubbo 2830
Ph 02 6884 9188 Fax 02 6884 3272
Dubbo SEG P2 TP1
oranahts-p.school@det.nsw.edu.au

Orange East Public School (2811)
45 Spring St Orange 2800
(PO Box 8092 Orange 2800)
Ph 02 6362 7464 Fax 02 6362 8956
Orange SEG P4 TP1
orangeeast-p.school@det.nsw.edu.au

Orange Grove Public School (2812)
Perry St Leichhardt 2040
Ph 02 9810 1378 Fax 02 9555 8657
Port Jackson SEG P5 TP1
orangegrov-p.school@det.nsw.edu.au

Orange High School (8134)
Woodward St Orange 2800
(PO Box 654 Orange 2800)
Ph 02 6362 3364, 02 6362 3444 Fax 02 6361 3616
Orange SEG S8 TP1
orange-h.school@det.nsw.edu.au

Orange Public School (7307)
78 Kite St Orange 2800
(PO Box 299 Orange 2800)
Ph 02 6362 6369, 02 6362 1992 Fax 02 6361 7923
Orange SEG P1 TP1
orange-p.school@det.nsw.edu.au

Orara High School (8469)
Joyce St Coffs Harbour 2450
(PO Box 911 Coffs Harbour 2450)
Ph 02 6652 1077 Fax 02 6651 3842
Coffs Harbour SEG S9 TP1
orara-h.school@det.nsw.edu.au

Orara Upper Public School **(2814)**
Orara Rd Upper Orara 2450
Ph 02 6653 8255 Fax 02 6653 8425
Coffs Harbour SEG P5 TP1 A 9
oraraupper-p.school@det.nsw.edu.au

Orchard Hills Public School **(2815)**
79-101 Kingswood Rd Orchard Hills 2748
Ph 02 4736 1108 Fax 02 4736 6003
Penrith Valley SEG P5 TP1
orchardhil-p.school@det.nsw.edu.au

Otford Public School **(2818)**
Station Rd Otford 2508
Ph 02 4294 1323 Fax 02 4294 3675
Wollongong North SEG P5 TP1
otford-p.school@det.nsw.edu.au

Ourimbah Public School **(2820)**
121 Pacific Hwy Ourimbah 2258
Ph 02 4362 1033 Fax 02 4362 2531
Hunter/Central Coast 3 SEG P2 TP1
ourimbah-p.school@det.nsw.edu.au

Oxley High School **(8455)**
Piper St Tamworth North 2340
Ph 02 6766 1677 Fax 02 6766 3937
New England Central SEG S8 TP1
oxley-h.school@det.nsw.edu.au

Oxley Island Public School **(2823)**
The Horsley Drive Oxley Island 2430
Ph 02 6553 2466 Fax 02 6553 2419
Manning Camden Haven SEG P5 TP1 A 9
oxleyislan-p.school@det.nsw.edu.au

Oxley Park Public School **(4055)**
Adelaide St St Marys 2760
Ph 02 9623 1375, 02 9623 6007 Fax 02 9623 1340
Minchinbury SEG P2 TP2
oxleypark-p.school@det.nsw.edu.au

Oxley Vale Public School **(3690)**
Manilla Rd Tamworth 2340
Ph 02 6761 8238 Fax 02 6761 8307
New England Central SEG P3 TP1
oxleyvale-p.school@det.nsw.edu.au

Oyster Bay Public School **(3593)**
Short St Oyster Bay 2225
Ph 02 9528 7525, 02 9528 8182 Fax 02 9528 3346
Woronora River SEG P3 TP1
oysterbay-p.school@det.nsw.edu.au

Pacific Palms Public School **(1551)**
Boomerang Drive Boomerang Beach 2428
Ph 02 6554 0249 Fax 02 6554 0642
Lower North Coast SEG P4 TP1 A 9
pacificpal-p.school@det.nsw.edu.au

Paddington Public School **(7432)**
Oxford St Paddington 2021
Ph 02 9361 6730 Fax 02 9360 9319
Network 8 SEG P3 TP1
paddington-p.school@det.nsw.edu.au

Padstow Heights Public School **(3958)**
Chamberlain Rd Padstow 2211
Ph 02 9773 9340, 02 9773 6857 Fax 02 9792 3961
East Hills SEG P3 TP1
padstowhts-p.school@det.nsw.edu.au

Padstow North Public School **(4088)**
Halcyon Ave & Watson Rd Padstow 2211
Ph 02 9773 8075, 02 9773 7926 Fax 02 9792 3910
East Hills SEG P4 TP1
padstownth-p.school@det.nsw.edu.au

Padstow Park Public School **(2826)**
Segers Ave Padstow 2211
Ph 02 9773 9258, 02 9774 1481 Fax 02 9792 3906
East Hills SEG P3 TP1
padstowpk-p.school@det.nsw.edu.au

Pagewood Public School **(3905)**
Page St Botany 2019
Ph 02 9316 9313 Fax 02 9316 4045
Botany Bay SEG P4 TP1
pagewood-p.school@det.nsw.edu.au

Palinyewah Public School **(3912)**
Palinyewah, Roadside Delivery Wentworth 2648
Ph 03 5027 9242 Fax 03 5027 9342
Broken Hill SEG P6 TP6 A 4HL
palinyewah-p.school@det.nsw.edu.au

Pallamallawa Public School **(2827)**
Centre St Pallamallawa 2399
Ph 02 6754 9209 Fax 02 6754 9435
New England West SEG P5 TP4 A 6HL
pallamalla-p.school@det.nsw.edu.au

Palm Avenue School **(5650)**
21 Dalwood Ave Seaforth 2092
Ph 02 9951 0308 Fax 02 9948 8170
Middle Harbour Network SEG SSP5 TP1
palmave-s.school@det.nsw.edu.au

Palmers Island Public School **(2829)**
Maclean-Yamba Rd Palmers Island 2460
Ph 02 6646 0114 Fax 02 6646 0328
Clarence SEG P5 TP1
palmersisl-p.school@det.nsw.edu.au

Pambula Public School **(2831)**
25 Oregon St Pambula 2549
Ph 02 6495 6006 Fax 02 6495 6426
Sapphire Coast/Monaro SEG P3 TP1
pambula-p.school@det.nsw.edu.au

Panania North Public School **(4012)**
Bransgrove Rd Panania 2213
Ph 02 9773 8394, 02 9773 6736 Fax 02 9792 3951
East Hills SEG P3 TP1
pananianth-p.school@det.nsw.edu.au

Panania Public School **(1809)**
Lawler St Panania 2213
Ph 02 9773 9017, 02 9773 8010 Fax 02 9792 3907
East Hills SEG P3 TP1
panania-p.school@det.nsw.edu.au

Para Meadows School **(5644)**
56 Porter St North Wollongong 2500
Ph 02 4229 1922 Fax 02 4226 5089
Wollongong North SEG SSP2 TP1
parameadow-s.school@det.nsw.edu.au

Parkes East Public School **(4204)**
1-3 Thornbury St Parkes 2870
Ph 02 6862 2021 Fax 02 6862 5270
Lachlan SEG P3 TP2
parkeseast-p.school@det.nsw.edu.au

Parkes High School **(8146)**
Albert St Parkes 2870
(PO Box 219 Parkes 2870)
Ph 02 6862 1844 Fax 02 6862 5046
Lachlan SEG S9 TP2
parkes-h.school@det.nsw.edu.au

Parkes Public School **(2835)**
77-85 Currajong St Parkes 2870
Ph 02 6862 1702, 02 6862 1867 Fax 02 6862 5047
Lachlan SEG P2 TP2
parkes-p.school@det.nsw.edu.au

Parklea Public School **(2838)**
Glenwood Park Drive Glenwood Park 2768
Ph 02 9629 2518 Fax 02 9629 2673
The Hills SEG P2 TP1
parklea-p.school@det.nsw.edu.au

Parkview Public School **(4413)**
Park Ave Leeton 2705
Ph 02 6953 2600 Fax 02 6953 5066
Riverina West SEG P4 TP4
parkview-p.school@det.nsw.edu.au

Parramatta East Public School **(3840)**
Brabyn St Parramatta 2150
Ph 02 9630 2127, 02 9630 3743 Fax 02 9683 5942
Cumberland SEG P4 TP1
parramatte-p.school@det.nsw.edu.au

Parramatta High School **(8135)**
Great Western Hwy & Pitt St Parramatta 2150
Ph 02 9635 8644, 02 9635 8767 Fax 02 9687 1139
Cumberland SEG S9 TP1
parramatta-h.school@det.nsw.edu.au

Parramatta North Public School **(2842)**
Albert St Parramatta North 2151
Ph 02 9630 1768 Fax 02 9890 1094
Cumberland SEG P4 TP1
parramattn-p.school@det.nsw.edu.au

Parramatta Public School **(2840)**
Macquarie St Parramatta 2150
Ph 02 9635 4397, 02 9635 6321 Fax 02 9687 1107
Cumberland SEG P2 TP1
parramatta-p.school@det.nsw.edu.au

Parramatta West Public School **(2843)**
Auburn & Young Sts Parramatta 2150
Ph 02 9635 9347, 02 9635 8256 Fax 02 9687 1151
Cumberland SEG P2 TP1
parramattw-p.school@det.nsw.edu.au

Parry School **(5580)**
53 Denison St Tamworth West 2340
Ph 02 6765 8796 Fax 02 6765 8843
New England South SEG SSP5 TP1
parry-s.school@det.nsw.edu.au

Passfield Park School **(5563)**
Guernsey Ave & Mossglen Ave Minto 2566
Ph 02 9820 1700 Fax 02 9603 6642
Ingleburn SEG SSP4 TP4
passfield-s.school@det.nsw.edu.au

Paterson Public School **(2844)**
Webbers Creek Rd Paterson 2421
Ph 02 4938 5114 Fax 02 4938 5226
Hunter/Central Coast 10 SEG P5 TP1
paterson-p.school@det.nsw.edu.au

Paxton Public School **(2846)**
20 Anderson Ave Paxton 2325
Ph 02 4998 1278 Fax 02 4998 1848
Hunter/Central Coast 9 SEG P5 TP1
paxton-p.school@det.nsw.edu.au

Peak Hill Central School **(2848)**
Caswell St Peak Hill 2869
Ph 02 6869 1304, 02 6869 1392 Fax 02 6869 1776
Dubbo SEG C3 TP4 A 8HL
peakhill-c.school@det.nsw.edu.au

Peakhurst Public School **(2849)**
Bonds Rd Peakhurst 2210
Ph 02 9153 9157, 02 9153 8937 Fax 02 9584 2068
Georges River SEG P3 TP1
peakhurst-p.school@det.nsw.edu.au

Peakhurst South Public School **(4323)**
Pindari Rd Peakhurst 2210
Ph 02 9153 7256, 02 9153 6515 Fax 02 9584 1468
Georges River SEG P3 TP1
peakhursts-p.school@det.nsw.edu.au

Peakhurst West Public School **(4013)**
Ogilvy St Peakhurst 2210
Ph 02 9153 9767, 02 9153 6453 Fax 02 9584 1476
Georges River SEG P3 TP1
peakhurstw-p.school@det.nsw.edu.au

Pearces Creek Public School **(2850)**
Humpty Back Rd Pearces Creek 2480
Ph 02 6628 0586 Fax 02 6628 1962
Southern Cross SEG P5 TP1 A 10
pearcescrk-p.school@det.nsw.edu.au

Peats Ridge Public School **(2852)**
660 Peats Ridge Road Peats Ridge 2250
Ph 02 4373 1149 Fax 02 4373 1076
Hunter/Central Coast 3 SEG P5 TP1
peatsridge-p.school@det.nsw.edu.au

Peel High School **(8525)**
88 Gunnedah Rd Tamworth 2340
Ph 02 6765 7088, 02 6765 7024 Fax 02 6765 3506
New England South SEG S9 TP1
peel-h.school@det.nsw.edu.au

Pelaw Main Public School **(2855)**
Abermain St Pelaw Main 2327
Ph 02 4937 1314 Fax 02 4936 1204
Hunter/Central Coast 9 SEG P4 TP1
pelawmain-p.school@det.nsw.edu.au

Pelican Flat Public School **(2476)**
Karog St Pelican Flat 2281
Ph 02 4971 1543 Fax 02 4972 1380
Hunter/Central Coast 7 SEG P5 TP1
pelicanflt-p.school@det.nsw.edu.au

Pendle Hill High School **(8395)**
Knox St Wentworthville 2145
Ph 02 9631 9651, 02 9631 2906 Fax 02 9896 3093
The Hills SEG S9 TP1
pendlehill-h.school@det.nsw.edu.au

Pendle Hill Public School **(3993)**
Pendle Way Wentworthville 2145
Ph 02 9631 8253, 02 9631 5857 Fax 02 9896 3082
Cumberland SEG P4 TP1
pendlehill-p.school@det.nsw.edu.au

Pennant Hills High School **(8438)**
Laurence St Pennant Hills 2120
Ph 02 9484 5732, 02 9484 6824 Fax 02 9875 4722
Hills Network SEG S8 TP1
pennanthil-h.school@det.nsw.edu.au

Pennant Hills Public School **(2857)**
Ramsay & Weemala Rds Pennant Hills 2120
Ph 02 9484 1134, 02 9484 2513 Fax 02 9875 2333
Hills Network SEG P2 TP1
pennanthil-p.school@det.nsw.edu.au

Penrith High School **(8163)**
High St Penrith 2750
Ph 02 4721 2674, 02 4721 0529 Fax 02 4721 2722
Penrith Valley SEG S9 TP1
penrith-h.school@det.nsw.edu.au

Penrith Lakes Environmental Education Centre **(5752)**
Castlereagh Rd Cranebrook 2750
Ph 02 4730 3630, 0412 668 952 Fax 02 4730 3662
Blue Mountains SEG EEC1 TP1
penritlake-e.school@det.nsw.edu.au

Penrith Public School **(2859)**
51 High St Penrith 2750
Ph 02 4721 2158, 02 4732 1142 Fax 02 4721 3466
Penrith Valley SEG P3 TP1
penrith-p.school@det.nsw.edu.au

Penrith South Public School **(4138)**
Jamison Rd Penrith 2750
Ph 02 4721 3160 Fax 02 4731 1011
Penrith Valley SEG P3 TP1
penrithsth-p.school@det.nsw.edu.au

Penrith Valley Learning Centre **(5761)**
Werrington Road Werrington 2747
Ph 02 9623 7532 Fax 02 9673 2543
Penrith Valley SEG SSP5 TP2
penrithvlc-s.school@det.nsw.edu.au

Penrose Public School **(2860)**
Penrose Rd Penrose 2579
Ph 02 4884 4238 Fax 02 4884 4493
Goulburn/Highlands SEG P6 TP1
penrose-p.school@det.nsw.edu.au

Penshurst Public School **(2861)**
Arcadia St Penshurst 2222
Ph 02 9580 3400, 02 9580 7638 Fax 02 9580 9216
Georges River SEG P3 TP1
penshurst-p.school@det.nsw.edu.au

Penshurst West Public School **(4051)**
Forest Rd & Scott St Mortdale 2223
Ph 02 9570 4602, 02 9570 1608 Fax 02 9580 6371
Network 8 SEG P3 TP1
penshurstw-p.School@det.nsw.edu.au

Perthville Public School **(2862)**
Rockley St Perthville 2795
Ph 02 6337 2316 Fax 02 6337 2321
Bathurst SEG P5 TP1 A C
perthville-p.school@det.nsw.edu.au

Peterborough School **(5666)**
William Ave Warilla 2528
(PO Box 332 Warilla, 2528)
Ph 02 4297 1611 Fax 02 4297 2804
Shellharbour SEG SSP4 TP1
peterboro-s.school@det.nsw.edu.au

Petersham Public School **(4502)**
25 Hunter St Petersham 2049
Ph 02 9560 9665 Fax 02 9564 2104
Inner City SEG P4 TP1
petersham-p.school@det.nsw.edu.au

Picnic Point High School **(8377)**
Kennedy St Panania 2213
Ph 02 9772 1700, 02 9772 1231 Fax 02 9792 3960
East Hills SEG S8 TP1
picnicpt-h.school@det.nsw.edu.au

Picnic Point Public School **(4342)**
Prince & Thomas Sts Picnic Point 2213
Ph 02 9773 7817, 02 9792 3994 Fax 02 9792 3913
East Hills SEG P3 TP1
picnicpt-p.school@det.nsw.edu.au

Picton High School **(8215)**
480 Argyle St Picton 2571
Ph 02 4677 1242, 02 4677 1261 Fax 02 4677 1559
Macarthur SEG S8 TP1
picton-h.school@det.nsw.edu.au

Picton Public School **(2867)**
Lumsdaine St Picton 2571
Ph 02 4677 1497, 02 4677 1217 Fax 02 4677 2103
Macarthur SEG P3 TP1
picton-p.school@det.nsw.edu.au

Pilliga Public School **(2870)**
Dangar St Pilliga 2388
Ph 02 6796 4338 Fax 02 6796 4376
New England West SEG P6 TP8 A 7HL
pilliga-p.school@det.nsw.edu.au

Pitt Town Public School **(2884)**
Buckingham St Pitt Town 2756
Ph 02 4572 3126 Fax 02 4572 3888
Hawkesbury SEG P5 TP1
pitttown-p.school@det.nsw.edu.au

Pittwater High School **(8379)**
Pittwater Rd & Mona St Mona Vale 2103
Ph 02 9999 4035 Fax 02 9979 5088
Peninsula Network SEG S9 TP1
pittwater-h.school@det.nsw.edu.au

Plattsburg Public School **(7308)**
Ranclaud St Wallsend 2287
(PO Box 2068 Elermore Vale 2287)
Ph 02 4955 9196, 02 4955 8022 Fax 02 4950 2186
Hunter/Central Coast 5 SEG P4 TP1
plattsburg-p.school@det.nsw.edu.au

Pleasant Heights Public School **(4357)**
Alvan Pde Mount Pleasant 2519
(PO Box 291 Fairy Meadow 2519)
Ph 02 4284 6962, 02 4284 2098 Fax 02 4284 4079
Wollongong North SEG P4 TP1
pleasantht-p.school@det.nsw.edu.au

Pleasant Hills Public School **(2886)**
Crawford St Pleasant Hills 2658
Ph 02 6929 6416 Fax 02 6929 6449
Riverina Central SEG P6 TP4 A 7
pleasanthi-p.school@det.nsw.edu.au

Plumpton High School **(8514)**
Hyatts Rd Plumpton 2761
Ph 02 9625 7020, 02 9625 7505 Fax 02 9832 1582
Mt Druitt SEG S8 TP2
plumpton-h.school@det.nsw.edu.au

Plumpton House School **(5754)**
327 Rooty Hill Road North Plumpton 2761
Ph 02 9625 5033 Fax 02 9625 8554
Mt Druitt SEG SSP4 TP4
plumptonho-s.school@det.nsw.edu.au

Plumpton Public School **(2887)**
Bottles Rd Plumpton 2761
Ph 02 9832 2466, 02 9832 2477 Fax 02 9832 2499
Mt Druitt SEG P2 TP2
plumpton-p.school@det.nsw.edu.au

Plunkett Street Public School **(4551)**
Forbes St Woolloomooloo 2011
Ph 02 9358 5335, 02 9358 5336 Fax 02 9357 1831
Port Jackson SEG P5 TP1
plunketstr-p.school@det.nsw.edu.au

Pocket Public School, The **(2890)**
The Pocket Rd The Pocket via Billinudgel 2483
Ph 02 6684 5226 Fax 02 6684 5536
Southern Cross SEG P5 TP1 A 9
thepocket-p.school@det.nsw.edu.au

Point Clare Public School **(4050)**
Takari Ave Point Clare 2250
Ph 02 4325 0594 Fax 02 4323 4983
Hunter/Central Coast 3 SEG P3 TP1
pointclare-p.school@det.nsw.edu.au

Pomona Public School **(2893)**
West Bank Darling River, Pomona Rd Pomona 2648
Ph 03 5027 3486 Fax 03 5027 3659
Broken Hill SEG P5 TP6 A 9HL
pomona-p.school@det.nsw.edu.au

Pooncarie Public School **(2895)**
Tarcoola Rd Pooncarie 2648
Ph 03 5029 5210 Fax 03 5029 5310
Broken Hill SEG P6 TP8 A 1HL
pooncarie-p.school@det.nsw.edu.au

Port Hacking High School **(8230)**
Kingsway Miranda 2228
(PO Box 187 Miranda 1490)
Ph 02 9524 8816, 02 9524 3216 Fax 02 9540 4815
Port Hacking SEG S8 TP1
porthackin-h.school@det.nsw.edu.au

Port Kembla Public School (2896)
Gloucester Boulevard Port Kembla 2505
Ph 02 4274 1041 Fax 02 4276 2840
Wollongong SEG P4 TP1
ptkembla-p.school@det.nsw.edu.au

Port Macquarie High School (8364)
Owen & Burrawan Sts Port Macquarie 2444
Ph 02 6583 1844, 02 6583 1868 Fax 02 6584 1632
Hastings SEG S8 TP1
portmac-h.school@det.nsw.edu.au

Port Macquarie Public School (2899)
Grant St Port Macquarie 2444
(PO Box 1056 Port Macquarie 2444)
Ph 02 6583 2977 Fax 02 6584 1265
Hastings SEG P2 TP1
portmac-p.school@det.nsw.edu.au

Portland Central School (2897)
Vale St Portland 2847
Ph 02 6355 5233, 02 6355 5205 Fax 02 6355 5256
Bathurst SEG C3 TP2
portland-c.school@det.nsw.edu.au

Pottsville Beach Public School (3578)
Tweed Coast Rd Pottsville 2489
Ph 02 6676 1161 Fax 02 6676 2787
Far North Coast SEG P2 TP1 A 9
pottsville-p.school@det.nsw.edu.au

Prairievale Public School (4554)
Prairievale & Mimosa Rds Bossley Park 2176
Ph 02 9604 0922, 02 9604 0265 Fax 02 9725 5579
Hoxton SEG P2 TP2
prairieval-p.school@det.nsw.edu.au

Prairiewood High School (8560)
Prairievale Rd Wetherill Park 2164
Ph 02 9725 5444 Fax 02 9604 6127
Hoxton SEG S8 TP2
prairiewoo-h.school@det.nsw.edu.au

Premer Public School (2900)
Ellerslie St Premer 2381
Ph 02 6744 2125 Fax 02 6744 2000
New England South SEG P6 TP4 A 5
premer-p.school@det.nsw.edu.au

Prestons Public School (2901)
Kurrajong & Box Rds Prestons 2170
(PO Box 230 Casula Mall Casula 2170)
Ph 02 9602 7435, 02 9602 0823 Fax 02 9821 1192
Liverpool SEG P2 TP2
prestons-p.school@det.nsw.edu.au

Pretty Beach Public School (2902)
Pretty Beach Rd Wagstaff 2256
Ph 02 4360 1012 Fax 02 4360 2153
Hunter/Central Coast 3 SEG P4 TP1
prettybch-p.school@det.nsw.edu.au

Primbee Public School (2904)
43 Illowra Cres Primbee 2504
Ph 02 4274 1974 Fax 02 4276 2837
Shellharbour SEG P5 TP1
primbee-p.school@det.nsw.edu.au

Punchbowl Boys High School (8184)
Kelly St Punchbowl 2196
Ph 02 9708 6122, 02 9708 6365 Fax 02 9796 7921
Strathfield SEG S9 TP2
punchbowlb-h.school@det.nsw.edu.au

Punchbowl Public School (2910)
Canterbury Rd Punchbowl 2196
Ph 02 9750 5055, 02 9750 5466 Fax 02 9740 4242
Strathfield SEG P2 TP1
punchbowl-p.school@det.nsw.edu.au

Putland School (5453)
Cnr Gt Western Hwy & Water St Werrington 2760
(PO Box 729 Kingswood 2747)
Ph 02 9623 8322, 02 9623 8165 Fax 02 9623 3576
Minchinbury SEG SSP3 TP2
putland-s.school@det.nsw.edu.au

Putney Public School (2913)
Morrison Rd Ryde 2112
Ph 02 9807 6255 Fax 02 9808 2758
Lane Cove Network SEG P3 TP1
putney-p.school@det.nsw.edu.au

Pymble Public School (3777)
Rushall St Pymble 2073
Ph 02 9144 4136, 02 9144 6728 Fax 02 9988 4938
North Shore Network SEG P2 TP1
pymble-p.school@det.nsw.edu.au

Quaama Public School (2917)
48 Cobargo St Quaama 2550
(PO Box 6004 Quaama 2550)
Ph 02 6493 8213 Fax 02 6493 8345
Sapphire Coast/Monaro SEG P5 TP1 A 9
quaama-p.school@det.nsw.edu.au

Quakers Hill East Public School (4212)
14 Chase Drive Acacia Gardens 2763
Ph 02 9626 9264 Fax 02 9837 1158
Nirimba SEG P2 TP2
quakershie-p.school@det.nsw.edu.au

Quakers Hill High School (8594)
Lalor Rd Quakers Hill 2763
Ph 02 9837 1533 Fax 02 9837 1747
Nirimba SEG S9 TP2
quakershil-h.school@det.nsw.edu.au

Quakers Hill Public School (2918)
Medlow Drive Quakers Hill 2763
Ph 02 9626 9284, 02 9626 9655 Fax 02 9837 1152
Nirimba SEG P2 TP1
quakershil-p.school@det.nsw.edu.au

Quambone Public School (2919)
Mungi Mungi St Quambone 2831
Ph 02 6824 2046 Fax 02 6824 2017
Warrumbungle SEG P6 TP8 A 3HL
quambone-p.school@det.nsw.edu.au

Quandialla Central School (2920)
Third St Quandialla 2721
Ph 02 6347 1207 Fax 02 6347 1248
Lachlan SEG C4 TP4 A 7
quandialla-c.school@det.nsw.edu.au

Queanbeyan East Public School (4371)
Yass St Queanbeyan 2620
(PO Box 562 Queanbeyan 2620)
Ph 02 6297 2619 Fax 02 6299 4128
Queanbeyan SEG P5 TP1 A C
queanbeyae-p.school@det.nsw.edu.au

Queanbeyan High School (8216)
Agnes Ave Queanbeyan 2620
Ph 02 6297 2088 Fax 02 6299 4285
Queanbeyan SEG S9 TP1 A C
queanbeyan-h.school@det.nsw.edu.au

Queanbeyan Public School (2922)
Isabella St Queanbeyan 2620
Ph 02 6297 2144 Fax 02 6299 4282
Queanbeyan SEG P1 TP1 A C
queanbeyan-p.school@det.nsw.edu.au

Queanbeyan South Public School (4394)
Cameron Rd Queanbeyan 2620
Ph 02 6297 3655 Fax 02 6299 3350
Queanbeyan SEG P2 TP1 A C
queanbeyas-p.school@det.nsw.edu.au

Queanbeyan West Public School (4127)
Morton St Queanbeyan 2620
Ph 02 6297 2020 Fax 02 6299 4284
Queanbeyan SEG P3 TP1 A C
queanbeyaw-p.school@det.nsw.edu.au

Quirindi High School (8174)
Hill St Quirindi 2343
Ph 02 6746 1177 Fax 02 6746 2648
New England South SEG S9 TP2
quirindi-h.school@det.nsw.edu.au

Quirindi Public School (3947)
Munro St Quirindi 2343
Ph 02 6746 1565, 02 6746 1459 Fax 02 6746 2600
New England South SEG P3 TP2
quirindi-p.school@det.nsw.edu.au

Raglan Public School (2927)
Nelson St Raglan 2795
Ph 02 6337 3427, 02 6337 3750 Fax 02 6337 3315
Bathurst SEG P4 TP1 A C
raglan-p.school@det.nsw.edu.au

Railway Town Public School (4233)
Wills St Broken Hill 2880
Ph 08 8087 3008 Fax 08 8087 7491
Broken Hill SEG P4 TP6 A HLY
railwaytow-p.school@det.nsw.edu.au

Rainbow Street Public School (2930)
Rainbow St Randwick 2031
Ph 02 9398 1986, 02 9398 3876 Fax 02 9399 8287
Botany Bay SEG P4 TP1
rainbowst-p.school@det.nsw.edu.au

Raleigh Public School (2931)
North St Raleigh 2454
Ph 02 6655 4228 Fax 02 6655 4548
Mid North Coast SEG P5 TP1
raleigh-p.school@det.nsw.edu.au

Ramsgate Public School (3830)
Chuter Ave Ramsgate 2217
Ph 02 9529 7267, 02 9529 7266 Fax 02 9529 8116
Georges River SEG P2 TP1
ramsgate-p.school@det.nsw.edu.au

Rand Public School (2933)
Cowal St Rand 2642
Ph 02 6029 5228 Fax 02 6029 5301
Riverina Central SEG P5 TP4 A 6
rand-p.school@det.nsw.edu.au

Randwick Boys High School (8161)
Rainbow & Avoca Sts Randwick 2031
Ph 02 9399 3122, 02 9399 3233 Fax 02 9399 9546
Botany Bay SEG S9 TP1
randwickb-h.school@det.nsw.edu.au

Randwick Girls High School (8220)
Barker St Randwick 2031
Ph 02 9398 3233, 02 9398 3388 Fax 02 9399 5183
Botany Bay SEG S8 TP1
randwickg-h.school@det.nsw.edu.au

Randwick Public School (4250)
Cowper St Randwick 2031
Ph 02 9398 6022 Fax 02 9399 8907
Botany Bay SEG P2 TP1
randwick-p.school@det.nsw.edu.au

Rankins Springs Public School (2935)
Boree St Rankins Springs 2669
Ph 02 6966 1206 Fax 02 6966 1296
Riverina North West SEG P6 TP6 A 5HL
rankinspr-p.school@det.nsw.edu.au

Rappville Public School (2937)
Lyons St Rappville 2469
Ph 02 6661 7109 Fax 02 6661 7226
Richmond Valley SEG P5 TP1 A 7
rappville-p.school@det.nsw.edu.au

Rathmines Public School (2193)
Secret Corner Rd Rathmines 2283
Ph 02 4975 1229 Fax 02 4975 4239
Hunter/Central Coast 6 SEG P3 TP1
rathmines-p.school@det.nsw.edu.au

Raymond Terrace Public School (2943)
Adelaide St Raymond Terrace 2324
Ph 02 4987 2083, 02 4987 2212 Fax 02 4987 4079
Hunter/Central Coast 10 SEG P3 TP1
raymondter-p.school@det.nsw.edu.au

Red Hill Environmental Education Centre (5750)
Saunders Ave Gulgong 2852
(PO Box 185 Gulgong 2852)
Ph 02 6374 2558 Fax 02 6374 2560
Dubbo SEG EEC2 TP1
redhill-e.school@det.nsw.edu.au

Red Range Public School (2948)
Red Range 2370
Ph 02 6734 2257 Fax 02 6734 2202
New England North SEG P5 TP2 A 9
redrange-p.school@det.nsw.edu.au

Redbank School (5559)
Institute Rd Westmead 2145
Ph 02 9633 1030 Fax 02 9687 1425
Cumberland SEG SSP4 TP1
redbank-s.school@det.nsw.edu.au

Redhead Public School (2946)
Hutchinson St Redhead 2290
Ph 02 4944 7215 Fax 02 4942 6098
Hunter/Central Coast 7 SEG P4 TP1
redhead-p.school@det.nsw.edu.au

Regents Park Public School (2950)
1 Auburn Rd Regents Park 2143
Ph 02 9644 2404, 02 9644 2252 Fax 02 9743 8372
Bankstown SEG P3 TP1
regentspk-p.school@det.nsw.edu.au

Regentville Public School (2951)
28-34 Schoolhouse Rd Regentville 2745
Ph 02 4733 1615 Fax 02 4733 4022
Penrith Valley SEG P2 TP1
regentvill-p.school@det.nsw.edu.au

Reids Flat Public School (2953)
Reids Flat 2586
Ph 02 6345 2231 Fax 02 6345 2248
Queanbeyan SEG P6 TP4 A 4
reidsflat-p.school@det.nsw.edu.au

Repton Public School (2955)
River St Repton 2454
Ph 02 6655 4201 Fax 02 6655 4570
Mid North Coast SEG P5 TP1 A 10
repton-p.school@det.nsw.edu.au

Revesby Public School (2958)
Victoria St Revesby 2212
Ph 02 9773 8255, 02 9773 9850 Fax 02 9792 3908
East Hills SEG P4 TP1
revesby-p.school@det.nsw.edu.au

Revesby South Public School (4016)
Mars St Revesby 2212
Ph 02 9773 8886, 02 9773 6861 Fax 02 9792 3958
East Hills SEG P3 TP1
revesbysth-p.school@det.nsw.edu.au

Richmond High School (8178)
Lennox St Richmond 2753
Ph 02 4578 1177 Fax 02 4588 5885
Hawkesbury SEG S9 TP1
richmond-h.school@det.nsw.edu.au

Richmond North Public School (2965)
Grose Vale Rd Richmond North 2754
Ph 02 4571 1542, 02 4571 1793 Fax 02 4571 3394
Hawkesbury SEG P4 TP1
richmondn-p.school@det.nsw.edu.au

Richmond Public School (3999)
Windsor St Richmond 2753
Ph 02 4578 2027, 02 4578 1009 Fax 02 4588 5886
Hawkesbury SEG P4 TP1
richmond-p.school@det.nsw.edu.au

Richmond River High School (8214)
Lake St North Lismore 2480
Ph 02 6621 3456 Fax 02 6622 2928
The Wilson SEG S9 TP1
richmondri-h.school@det.nsw.edu.au

Ringrose Public School (4312)
Ringrose Ave Greystanes 2145
Ph 02 9631 8637, 02 9636 6659 Fax 02 9896 3240
Granville SEG P4 TP1
ringrose-p.school@det.nsw.edu.au

Risk Public School, The (2968)
Kyogle-Woodenbong Rd The Risk 2474
Ph 02 6636 6127 Fax 02 6636 6110
Richmond Valley SEG P5 TP1 A 8
therisk-p.school@det.nsw.edu.au

Rivendell School (5654)
Thomas Walker Est, Hospital Rd Concord West 2138
Ph 02 9743 1075 Fax 02 9736 3784
Strathfield SEG SSP3 TP1
rivendell-s.school@det.nsw.edu.au

Riverina Environmental Education Centre (5734)
Cnr Sturt & Olympic Highway Wagga Wagga 2650
(PO Box 5336 Wagga Wagga 2650)
Ph 02 6932 9134 Fax 02 6931 5084
Riverina East SEG EEC2 TP1
riverina-e.school@det.nsw.edu.au

Riverside Girls High School (8243)
Huntleys Point Rd Gladesville 2111
(Locked Bag 3 Lane Cove 2066)
Ph 02 9816 4264, 02 9816 4274 Fax 02 9816 5409
Lane Cove Network SEG S9 TP1
riversideg-h.school@det.nsw.edu.au

Riverstone High School (8907)
McCulloch St Riverstone 2765
Ph 02 9627 1484, 02 9627 1646 Fax 02 9838 1138
Nirimba SEG S9 TP2
riverstone-h.school@det.nsw.edu.au

Riverstone Public School (2970)
Elizabeth St Riverstone 2765
Ph 02 9627 1517, 02 9627 2609 Fax 02 9838 1131
Nirimba SEG P3 TP1
riverstone-p.school@det.nsw.edu.au

Riverwood Public School (3743)
Union St Riverwood 2210
Ph 02 9153 8757, 02 9153 8759 Fax 02 9584 1558
East Hills SEG P5 TP1
riverwood-p.school@det.nsw.edu.au

Robert Townson High School (8575)
Thunderbolt Drive Raby 2566
Ph 02 9824 7777 Fax 02 9820 2921
Ingleburn SEG S8 TP2
roberttown-h.school@det.nsw.edu.au

Robert Townson Public School (4569)
Shuttleworth Ave Raby 2566
Ph 02 9824 7411, 02 9824 8000 Fax 02 9820 2954
Ingleburn SEG P2 TP2
roberttown-p.school@det.nsw.edu.au

Robertson Public School (2971)
Hoddle St Robertson 2577
Ph 02 4885 1284 Fax 02 4885 1119
Goulburn/Highlands SEG P4 TP1
robertson-p.school@det.nsw.edu.au

Rock Central School, The (2976)
Ford St The Rock 2655
Ph 02 6920 2132 Fax 02 6920 2023
Riverina North SEG C4 TP2 A 9
therock-c.school@det.nsw.edu.au

Rockdale Public School (2973)
Lord St Rockdale 2216
Ph 02 9567 6146, 02 9567 8893 Fax 02 9567 1947
Georges River SEG P2 TP1
rockdale-p.school@det.nsw.edu.au

Rockley Public School (2974)
Hill St Rockley 2795
Ph 02 6337 9336 Fax 02 6337 9308
Bathurst SEG P6 TP2 A C
rockley-p.school@det.nsw.edu.au

Rocky River Public School (2983)
Uralla-Bundarra Rd Uralla 2358
Ph 02 6778 4122 Fax 02 6778 3019
New England Central SEG P5 TP1 A C
rockyriver-p.school@det.nsw.edu.au

Rollands Plains Upper Public School (2985)
719 Upper Rollands Plains Rd Rollands Plains 2441
Ph 02 6585 8274 Fax 02 6585 8344
Hastings SEG P6 TP1 A 5
rollandplu-p.school@det.nsw.edu.au

Rookhurst Public School (2986)
Thunderbolts Way Rookhurst 2422
Ph 02 6558 7538 Fax 02 6558 7410
Lower North Coast SEG P6 TP1 A 8
rookhurst-p.school@det.nsw.edu.au

Rooty Hill High School (8908)
North Pde Rooty Hill 2766
Ph 02 9625 8104, 02 9625 0038 Fax 02 9625 4208
Minchinbury SEG S8 TP2
rootyhill-h.school@det.nsw.edu.au

Rooty Hill Public School (4056)
Rooty Hill Rd North Rooty Hill 2766
Ph 02 9625 8807, 02 9625 8346 Fax 02 9832 1561
Minchinbury SEG P2 TP2
rootyhill-p.school@det.nsw.edu.au

Ropes Crossing Public School (4645)
Pulley Drive Ropes Crossing 2760
Ph 02 9833 7615 Fax 02 9673 5281
Mt Druitt SEG P4 TP4
ropescross-p.school@det.nsw.edu.au

Rose Bay Public School (2988)
Albemarle Ave Rose Bay 2029
Ph 02 9371 4884, 02 9371 4800 Fax 02 9371 9466
Network 8 SEG P3 TP1
rosebay-p.school@det.nsw.edu.au

Rose Bay Secondary College (8555)
34A Hardy St Dover Heights 2030
Ph 02 9301 0300, 02 9371 5466 Fax 02 9371 4688
Network 8 SEG S9 TP1
rosebay-h.school@det.nsw.edu.au

Rosebank Public School (2987)
Lismore-Mullumbimby Rd Rosebank 2480
Ph 02 6688 2126 Fax 02 6688 2281
The Wilson SEG P5 TP1 A 8
rosebank-p.school@det.nsw.edu.au

Rosehill Public School (7444)
Prospect St Rosehill 2142
Ph 02 9637 2202, 02 9637 2215 Fax 02 9897 3367
Cumberland SEG P3 TP1
rosehill-p.school@det.nsw.edu.au

Roselea Public School **(4294)**
North Rocks Rd Carlingford 2118
Ph 02 9871 1324, 02 9871 1538 Fax 02 9871 2152
Hills Network SEG P3 TP1
roselea-p.school@det.nsw.edu.au

Rosemeadow Public School **(4537)**
Anthony & Copperfield Drives Rosemeadow 2560
Ph 02 4621 1733 Fax 02 4621 2033
Campbelltown SEG P2 TP2
rosemeadow-p.school@det.nsw.edu.au

Roseville Public School **(2994)**
Archbold Rd Roseville 2069
Ph 02 9417 4107, 02 9417 4127 Fax 02 9417 4922
North Shore Network SEG P2 TP1
roseville-p.school@det.nsw.edu.au

Rosewood Public School **(2996)**
Humula St Rosewood 2652
Ph 02 6948 8261 Fax 02 6948 8328
Riverina East SEG P6 TP4 A 5
rosewood-p.school@det.nsw.edu.au

Ross Hill Public School **(2997)**
Andrew St Inverell 2360
Ph 02 6722 2475, 02 6722 1416 Fax 02 6722 5806
New England North SEG P2 TP2
rosshill-p.school@det.nsw.edu.au

Rossmore Public School **(2999)**
Bringelly Rd Rossmore 2171
Ph 02 9606 5551, 02 9606 5850 Fax 02 9606 5844
Hoxton SEG P4 TP1
rossmore-p.school@det.nsw.edu.au

Rouchel Public School **(3003)**
Rouchel Rd Upper Rouchel 2336
Ph 02 6543 6268 Fax 02 6543 6303
Hunter/Central Coast 8 SEG P6 TP2 A 6
rouchel-p.school@det.nsw.edu.au

Rous Public School **(3006)**
Rous Mill Rd Alstonville 2477
Ph 02 6629 5294 Fax 02 6629 5348
Southern Cross SEG P5 TP1 A 10
rous-p.school@det.nsw.edu.au

Rouse Hill Public School **(3008)**
Clower Ave Rouse Hill 2155
Ph 02 8824 7330 Fax 02 8824 7335
The Hills SEG P2 TP2
rousehill-p.school@det.nsw.edu.au

Rowena Public School **(3580)**
Shaw St Rowena 2387
Ph 02 6796 5145 Fax 02 6796 5271
New England West SEG P5 TP8 A 3HL
rowena-p.school@det.nsw.edu.au

Rowland Hassall School **(5411)**
Hassall St Parramatta 2150
Ph 02 9635 6363, 02 9635 5607 Fax 02 9687 1430
Cumberland SEG SSP4 TP2
rowlandhas-s.school@det.nsw.edu.au

Royal Far West School **(5504)**
22 Wentworth St Manly 2095
Ph 02 9977 2452 Fax 02 9976 2744
Peninsula Network SEG SSP5 TP1
royalfarwe-s.school@det.nsw.edu.au

Royal National Park Environmental Education Centre **(5691)**
Farnell Ave Audley Heights 2232
(PO Box 44 Sutherland 1499)
Ph 02 9542 1951 Fax 02 9545 4830
Port Hacking SEG EEC2 TP1
royalnatpk-e.school@det.nsw.edu.au

Royal North Shore Hospital School **(5544)**
Chldn Ward Lev 5 Bld 53 Pacific Hwy St Leonards 2065
Ph 02 9926 7382 Fax 02 9906 6314
North Shore Network SEG SSP4 TP1
royalnshos-s.school@det.nsw.edu.au

Royal Prince Alfred Hospital School **(5543)**
Lvl 9 Page Pavilion, Missenden Rd Camperdown 2050
Ph 02 9515 7732 Fax 02 9515 7733
Botany Bay SEG SSP4 TP1
rpahos-s.school@det.nsw.edu.au

Rozelle Public School **(7435)**
Darling St Rozelle 2039
Ph 02 9810 2347, 02 9810 2716 Fax 02 9555 8715
Port Jackson SEG P3 TP1
rozelle-p.school@det.nsw.edu.au

Rugby Public School **(3012)**
Boorowa-Crookwell Rd Rugby 2583
Ph 02 4835 7241 Fax 02 4835 7205
Queanbeyan SEG P6 TP4 A 5
rugby-p.school@det.nsw.edu.au

Rukenvale Public School **(3013)**
2303 Summerland Way Rukenvale 2474
(PO Box 358 Kyogle 2474)
Ph 02 6636 4151 Fax 02 6636 4296
Richmond Valley SEG P5 TP1 A 8
rukenvale-p.school@det.nsw.edu.au

Rumbalara Environmental Education Centre **(5740)**
Donnison St Gosford 2250
Ph 02 4324 7200 Fax 02 4323 7451
Hunter/Central Coast 1 SEG EEC2 TP1
rumbalara-e.school@det.nsw.edu.au

Ruse Public School **(4489)**
Junction Rd Ruse 2560
Ph 02 4625 7811, 02 4625 7533 Fax 02 4626 7422
Campbelltown SEG P3 TP2
ruse-p.school@det.nsw.edu.au

Russell Lea Infants School **(5132)**
Lithgow St Five Dock 2046
Ph 02 9713 8267 Fax 02 9713 4673
Port Jackson SEG P5 TP1
russelllea-p.school@det.nsw.edu.au

Russell Vale Public School **(3973)**
Terania St Russell Vale 2517
Ph 02 4284 4396 Fax 02 4285 1761
Wollongong North SEG P3 TP1
russellval-p.school@det.nsw.edu.au

Rutherford High School **(8572)**
Avery St Rutherford 2320
Ph 02 4932 5999 Fax 02 4932 8166
Hunter/Central Coast 8 SEG S9 TP1
rutherford-h.school@det.nsw.edu.au

Rutherford Public School **(4561)**
Webland St Rutherford 2320
Ph 02 4932 5900 Fax 02 4932 4599
Hunter/Central Coast 8 SEG P2 TP1
rutherford-p.school@det.nsw.edu.au

Rydalmere East Public School **(4123)**
Spurway St Ermington 2115
Ph 02 9638 2250, 02 9638 3731 Fax 02 9638 0191
Cumberland SEG P4 TP1
rydalmeree-p.school@det.nsw.edu.au

Rydalmere Public School **(3020)**
Victoria Rd Rydalmere 2116
Ph 02 9638 1568, 02 9638 2944 Fax 02 9898 0161
Cumberland SEG P5 TP1
rydalmere-p.school@det.nsw.edu.au

Ryde East Public School **(4257)**
12 Twin Rd North Ryde 2113
Ph 02 9878 3681, 02 9888 5620 Fax 02 9878 6029
Lane Cove Network SEG P3 TP1
rydeeast-p.school@det.nsw.edu.au

Ryde Public School **(3021)**
Pope St Ryde 2112
Ph 02 9809 3181, 02 9809 1762 Fax 02 9808 2732
Lane Cove Network SEG P2 TP1
ryde-p.school@det.nsw.edu.au

Ryde Secondary College **(8415)**
Malvina St Ryde 2112
Ph 02 9809 4894 Fax 02 9808 2642
Lane Cove Network SEG S9 TP1
rydesc-h.school@det.nsw.edu.au

Rye Park Public School **(3024)**
Dalton Rd Rye Park 2586
Ph 02 6227 2251 Fax 02 6227 2256
Queanbeyan SEG P5 TP4 A 8
ryepark-p.school@det.nsw.edu.au

Rylstone Public School **(3025)**
Mudgee St Rylstone 2849
Ph 02 6379 1404 Fax 02 6379 1532
Warrumbungle SEG P5 TP4
rylstone-p.school@det.nsw.edu.au

Sackville Street Public School **(4491)**
Sackville & Bradley Sts Ingleburn 2565
Ph 02 9605 3073, 02 9605 3125 Fax 02 9605 3874
Ingleburn SEG P2 TP2
sackvillst-p.school@det.nsw.edu.au

Sadleir Public School **(4319)**
Insignia St Sadleir 2168
Ph 02 9607 8201, 02 9607 8919 Fax 02 9608 4935
Liverpool SEG P4 TP4
sadleir-p.school@det.nsw.edu.au

Salt Ash Public School **(3035)**
4 Salt Ash Ave Salt Ash 2318
Ph 02 4982 6251 Fax 02 4982 6045
Hunter/Central Coast 10 SEG P5 TP1
saltash-p.school@det.nsw.edu.au

Samuel Gilbert Public School **(4574)**
Ridgecrop Drive Castle Hill 2154
Ph 02 9680 4477 Fax 02 9680 4277
Hills Network SEG P2 TP1
samuelgilb-p.school@det.nsw.edu.au

Samuel Terry Public School **(4560)**
Grays Lane Cranebrook 2749
Ph 02 4730 2888 Fax 02 4729 1386
Penrith Valley SEG P2 TP1
samuelterr-p.school@det.nsw.edu.au

Sanctuary Point Public School **(4464)**
Idlewild Ave Sanctuary Point 2540
Ph 02 4443 0546 Fax 02 4443 7036
Batemans Bay SEG P2 TP1
sancturypt-p.school@det.nsw.edu.au

Sandon Public School **(5696)**
Erskine & Niagara Sts Armidale 2350
Ph 02 6772 3349 Fax 02 6772 9491
New England Central SEG P4 TP1 A C
sandon-p.school@det.nsw.edu.au

Sandy Beach Public School **(4557)**
Saye Close Sandy Beach 2456
Ph 02 6656 1777, 02 6656 1705 Fax 02 6656 1624
Coffs Harbour SEG P3 TP1
sandybeach-p.school@det.nsw.edu.au

Sandy Hollow Public School **(1974)**
Merriwa-Muswellbrook Rd Sandy Hollow 2333
Ph 02 6547 4521 Fax 02 6547 4450
Hunter/Central Coast 8 SEG P5 TP2 A 9
sandyhollo-p.school@det.nsw.edu.au

Sans Souci Public School (3038)
Rocky Point Rd Sans Souci 2219
Ph 02 9529 6123, 02 9529 7064 Fax 02 9583 1252
Port Hacking SEG P2 TP1
sanssouci-p.school@det.nsw.edu.au

Sarah Redfern High School (8551)
Pembroke Rd Minto 2566
Ph 02 9820 1566 Fax 02 9820 3050
Ingleburn SEG S9 TP4
sarahredfe-h.school@det.nsw.edu.au

Sarah Redfern Public School (4509)
Stafford St & Guernsey Rd Minto 2566
Ph 02 9820 1499 Fax 02 9820 2912
Ingleburn SEG P2 TP4
sarahredfe-p.school@det.nsw.edu.au

Saturday School of Community Languages (8600)
3A Smalls Rd Ryde 2112
Ph 02 9886 7505 Fax 02 9886 7514
Lane Cove Network SEG TP0

Savernake Public School (3041)
Riverina Hwy Savernake 2646
Ph 02 6035 9422 Fax 02 6035 9437
Riverina South SEG P6 TP4 A 7
savernake-p.school@det.nsw.edu.au

Sawtell Public School (3042)
32-36 Eleventh Ave Sawtell 2452
(PO Box 141 Sawtell 2452)
Ph 02 6653 1666, 02 6653 1595 Fax 02 6658 2384
Coffs Harbour SEG P4 TP1
sawtell-p.school@det.nsw.edu.au

Scarborough Public School (3045)
Lawrence Hargrave Drive Scarborough 2515
(PO Box 800 Thirroul 2515)
Ph 02 4267 2153 Fax 02 4268 1461
Wollongong North SEG P5 TP1
scarboroug-p.school@det.nsw.edu.au

Schofields Public School (3046)
St Albans Rd Schofields 2762
Ph 02 9627 1534, 02 9627 1992 Fax 02 9838 1134
Nirimba SEG P4 TP1
schofields-p.school@det.nsw.edu.au

School of the Air (5302)
Lane St Broken Hill 2880
(PO Box 405 Broken Hill 2880)
Ph 08 8087 3565 Fax 08 8088 5998
Broken Hill SEG P3 TP6 A HLY
schoolair-p.school@det.nsw.edu.au

Scone High School (8409)
Gundy Rd Scone 2337
Ph 02 6545 1455 Fax 02 6545 3269
Hunter/Central Coast 8 SEG S9 TP1
scone-h.school@det.nsw.edu.au

Scone Public School (7311)
Liverpool St Scone 2337
Ph 02 6545 1049 Fax 02 6545 3046
Hunter/Central Coast 8 SEG P2 TP1
scone-p.school@det.nsw.edu.au

Scotts Head Public School (3635)
Gloucester St Scotts Head 2447
Ph 02 6569 8144 Fax 02 6569 8329
Mid North Coast SEG P5 TP1 A 10
scottshead-p.school@det.nsw.edu.au

Seaforth Public School (1104)
37 Kempbridge Avenue Seaforth 2092
Ph 02 9948 1694, 02 9907 0284 Fax 02 9907 0858
Middle Harbour Network SEG P3 TP1
seaforth-p.school@det.nsw.edu.au

Seaham Public School (3048)
Still St Seaham 2324
Ph 02 4988 6234, 02 4988 6433 Fax 02 4988 6435
Hunter/Central Coast 10 SEG P4 TP1
seaham-p.school@det.nsw.edu.au

Sefton High School (8265)
Munro & Hector Sts Sefton 2162
Ph 02 9644 4800, 02 9644 3032 Fax 02 9743 7161
Granville SEG S8 TP1
sefton-h.school@det.nsw.edu.au

Sefton Infants School (5188)
180-194 Rodd St Sefton 2162
Ph 02 9644 4079, 02 9645 3768 Fax 02 9743 7175
Granville SEG P5 TP1
seftoninf-p.school@det.nsw.edu.au

Seven Hills High School (8231)
Johnson Ave Seven Hills 2147
Ph 02 9624 3329, 02 9624 3561 Fax 02 9838 8553
Nirimba SEG S9 TP2
sevenhills-h.school@det.nsw.edu.au

Seven Hills North Public School (3053)
45 Beethoven St Seven Hills 2147
Ph 02 9624 1275 Fax 02 9838 7839
Nirimba SEG P4 TP1
sevenhilln-p.school@det.nsw.edu.au

Seven Hills Public School (3931)
2A Lucas Rd Seven Hills 2147
Ph 02 9624 3441, 02 9624 3348 Fax 02 9838 8483
Nirimba SEG P5 TP1
sevenhills-p.school@det.nsw.edu.au

Seven Hills West Public School (4162)
Lucas Rd & Sackville St Seven Hills 2147
Ph 02 9622 2136, 02 9622 2688 Fax 02 9831 6437
Nirimba SEG P3 TP2
sevenhillw-p.school@det.nsw.edu.au

Shalvey Public School (4476)
Laver St Shalvey 2770
Ph 02 9628 0322, 02 9628 0323 Fax 02 9628 3545
Mt Druitt SEG P2 TP4
shalvey-p.school@det.nsw.edu.au

Shell Cove Public school (4641)
Cnr Killalea Drive & Stradbroke Ave Shell Cove 2529
(PO Box A33 Shellharbour 2529)
Ph 02 4297 2247 Fax 02 4297 3357
Shellharbour SEG P3 TP1
shellcove-p.school@det.nsw.edu.au

Shelley Public School (4381)
Hadrian Ave Blacktown 2148
Ph 02 9622 8359, 02 9621 2958 Fax 02 9831 6726
Nirimba SEG P2 TP2
shelley-p.school@det.nsw.edu.au

Shellharbour Public School (3060)
Mary St Shellharbour 2529
Ph 02 4295 1334 Fax 02 4297 2399
Shellharbour SEG P3 TP1
shellharb-p.school@det.nsw.edu.au

Shepherds Park School (5711)
129 Fernleigh Rd Wagga Wagga 2650
(PO Box 7365 Wagga Wagga 2650)
Ph 02 6931 4723 Fax 02 6931 4360
Riverina East SEG SSP5 TP1
shepherds-s.school@det.nsw.edu.au

Sherwood Grange Public School (4328)
Bruce St Merrylands 2160
Ph 02 9632 9447, 02 9632 3625 Fax 02 9892 2715
Granville SEG P4 TP1
sherwoodgr-p.school@det.nsw.edu.au

Sherwood Ridge Public School (4640)
Rosebery Rd Kellyville 2155
Ph 02 8824 3333 Fax 02 8824 5700
The Hills SEG P2 TP1
sherwood-p.school@det.nsw.edu.au

Shoal Bay Public School (4589)
Rigney St Shoal Bay 2315
Ph 02 4981 1007 Fax 02 4984 1637
Hunter/Central Coast 10 SEG P4 TP1
shoalbay-p.school@det.nsw.edu.au

Shoalhaven Heads Public School (1625)
Ravenscliff Rd Shoalhaven Heads 2535
Ph 02 4448 7174 Fax 02 4448 7086
Shoalhaven SEG P4 TP1
shoalhaven-p.school@det.nsw.edu.au

Shoalhaven High School (8561)
Park Rd Nowra 2541
(PO Box 4041 Nowra East 2541)
Ph 02 4421 8022 Fax 02 4423 0272
Shoalhaven SEG S8 TP1
shoalhaven-h.school@det.nsw.edu.au

Shortland Public School (3065)
Sandgate Rd Shortland 2307
Ph 02 4955 8476, 02 4955 8811 Fax 02 4955 8209
Hunter/Central Coast 5 SEG P4 TP1
shortland-p.school@det.nsw.edu.au

Singleton Heights Public School (4486)
Dorseman Drive Singleton Heights 2330
Ph 02 6573 1363 Fax 02 6573 1414
Hunter/Central Coast 8 SEG P2 TP1
singletonh-p.school@det.nsw.edu.au

Singleton High School (8202)
York St Singleton 2330
Ph 02 6571 1199 Fax 02 6572 4889
Hunter/Central Coast 8 SEG S8 TP1
singleton-h.school@det.nsw.edu.au

Singleton Public School (3070)
Hunter St Singleton 2330
Ph 02 6571 2250 Fax 02 6572 3076
Hunter/Central Coast 8 SEG P2 TP1
singleton-p.school@det.nsw.edu.au

Sir Eric Woodward Memorial School (5675)
Ayres & Acron Rds St Ives 2075
Ph 02 9449 6003 Fax 02 9983 9334
North Shore Network SEG SSP3 TP1
sirericwoo-s.school@det.nsw.edu.au

Sir Henry Parkes Memorial Public School, The (3182)
Wood St Tenterfield 2372
Ph 02 6736 1401, 02 6736 1439 Fax 02 6736 2898
New England North SEG P4 TP2
sirhparkes-p.school@det.nsw.edu.au

Sir Joseph Banks High School (8250)
Turvey St Revesby 2212
Ph 02 9773 6054, 02 9773 4922 Fax 02 9792 3863
East Hills SEG S9 TP1
sirjosephb-h.school@det.nsw.edu.au

Smithfield Public School (3073)
O Connell St Smithfield 2164
Ph 02 9604 5475, 02 9604 5427 Fax 02 9725 5648
Fairfield SEG P2 TP2
smithfield-p.school@det.nsw.edu.au

Smithfield West Public School (4355)
Wetherill St Wetherill Park 2164
Ph 02 9604 3161, 02 9604 4501 Fax 02 9725 5769
Fairfield SEG P3 TP2
smithfielw-p.school@det.nsw.edu.au

Smiths Hill High School (8542)
Gipps St Wollongong 2500 (PO Box 110 Keiraville 2500)
Ph 02 4229 4266 Fax 02 4226 5104
Wollongong SEG S9 TP1
smithshill-h.school@det.nsw.edu.au

Smithtown Public School (3075)
Cannane St Smithtown 2440
Ph 02 6567 4529 Fax 02 6567 4823
Hastings SEG P5 TP1 A 10
smithtown-p.school@det.nsw.edu.au

Sofala Public School (3077)
Turon Terrace Sofala 2795
Ph 02 6337 7085 Fax 02 6337 7012
Bathurst SEG P6 TP2 A 5
sofala-p.school@det.nsw.edu.au

Soldiers Point Public School (3696)
Cromarty Rd Soldiers Point 2317
Ph 02 4982 7151 Fax 02 4982 0576
Hunter/Central Coast 10 SEG P4 TP1
soldierspt-p.school@det.nsw.edu.au

Somersby Public School (3078)
Wisemans Ferry Rd Gosford 2250
Ph 02 4372 1233 Fax 02 4372 1542
Hunter/Central Coast 3 SEG P5 TP1
somersby-p.school@det.nsw.edu.au

Somerton Public School (3079)
Milkmaid St Somerton 2340
Ph 02 6769 7520 Fax 02 6769 7400
New England South SEG P5 TP1 A 7
somerton-p.school@det.nsw.edu.au

SOUTH
Most schools whose name includes SOUTH are listed under the main name, eg for SOUTH BLACKTOWN see BLACKTOWN SOUTH. The exceptions are listed below.

South Coogee Public School (3703)
Moverly Rd South Coogee 2034
Ph 02 9349 4000 Fax 02 9349 4292
Network 8 SEG P2 TP1
sthcoogee-p.school@det.nsw.edu.au

South Grafton High School (8406)
Tyson St South Grafton 2460
Ph 02 6642 1466 Fax 02 6643 2027
Clarence SEG S8 TP1
sthgrafton-h.school@det.nsw.edu.au

South Grafton Public School (2061)
Vere St South Grafton 2460
Ph 02 6642 3388 Fax 02 6643 2065
Clarence SEG P2 TP1
sthgrafton-p.school@det.nsw.edu.au

South Sydney High School (8545)
Paine St Maroubra 2035
Ph 02 9349 3868, 02 9349 3454 Fax 02 9349 7384
Botany Bay SEG S8 TP1
sthsydney-h.school@det.nsw.edu.au

South Wagga Public School (3333)
140 Edward St South Wagga Wagga 2650
(PO Box 2005 Wagga Wagga 2650)
Ph 02 6921 2947 Fax 02 6921 8746
Riverina Central SEG P3 TP1
sthwagga-p.school@det.nsw.edu.au

South West Rocks Public School (3083)
Gregory St South West Rocks 2431
Ph 02 6566 6208 Fax 02 6566 6676
Hastings SEG P3 TP1
sthwestroc-p.school@det.nsw.edu.au

Southern Cross School (4428)
Chickiba Drive Ballina East 2478
Ph 02 6686 0503, 02 6686 0504 Fax 02 6686 0508
Southern Cross SEG C8 TP1
sthcross-c.school@det.nsw.edu.au

Speers Point Public School (3968)
Bell St Speers Point 2284
(PO Box 48 Boolaroo)
Ph 02 4958 1230 Fax 02 4958 2478
Hunter/Central Coast 6 SEG P4 TP1
speerspt-p.school@det.nsw.edu.au

Spencer Public School (3084)
Wisemans Ferry Rd Spencer 2775
Ph 02 4377 1142 Fax 02 4377 1348
Hunter/Central Coast 3 SEG P6 TP1
spencer-p.school@det.nsw.edu.au

Spring Hill Public School (3089)
Seaton Street Spring Hill 2800
Ph 02 6365 5259 Fax 02 6365 5247
Orange SEG P5 TP2 A 9
springhill-p.school@det.nsw.edu.au

Spring Ridge Public School (3091)
Darby Rd Spring Ridge 2343
Ph 02 6747 3855 Fax 02 6747 3987
New England South SEG P5 TP4 A 5
springridg-p.school@det.nsw.edu.au

Spring Terrace Public School (3093)
Orange-Blayney Rd Millthorpe 2798
(573 Forest Road, Spring Terrace 2798)
Ph 02 6365 4287 Fax 02 6365 4264
Orange SEG P5 TP2 A 10
springterr-p.school@det.nsw.edu.au

Springdale Heights Public School (4523)
25 Cardo Drive Lavington 2641
Ph 02 6025 6433 Fax 02 6040 2328
Riverina South SEG P4 TP1
springdale-p.school@det.nsw.edu.au

Springwood High School (8446)
Grose Rd Springwood 2777
Ph 02 4751 2111, 02 4751 2958 Fax 02 4751 1677
Blue Mountains SEG S9 TP1
springwood-h.school@det.nsw.edu.au

Springwood Public School (3095)
Burns Rd Springwood 2777
Ph 02 4751 1333, 02 4751 1351 Fax 02 4751 1951
Blue Mountains SEG P3 TP1
springwood-p.school@det.nsw.edu.au

St Andrews Public School (4481)
Ballantrae Drive St Andrews 2566
(PO Box 6008 Minto BC 2566)
Ph 02 9603 1333, 02 9603 1633 Fax 02 9820 3127
Ingleburn SEG P1 TP2
standrews-p.school@det.nsw.edu.au

St Clair High School (8571)
Endeavour Ave St Clair 2759
Ph 02 9670 6700 Fax 02 9834 3867
Minchinbury SEG S8 TP2
stclair-h.school@det.nsw.edu.au

St Clair Public School (4531)
Timesweep Drive St Clair 2759
Ph 02 9670 1966, 02 9670 1967 Fax 02 9834 4369
Minchinbury SEG P4 TP1
stclair-p.school@det.nsw.edu.au

St George Girls High School (8136)
Victoria St Kogarah 2217
Ph 02 9587 5902, 02 9587 4109 Fax 02 9553 8043
Georges River SEG S8 TP1
stgeorgegi-h.school@det.nsw.edu.au

St George Hospital School (5513)
Paediatric Ward,Lvl 1 East, Gray St Kogarah 2217
Ph 02 9350 2329 Fax 02 9553 8051
Botany Bay SEG SSP4 TP1
stgeorgeho-s.school@det.nsw.edu.au

St George School (5527)
Marshall St Kogarah 2217
Ph 02 9588 2400 Fax 02 9588 5008
Georges River SEG SSP4 TP1
stgeorge-s.school@det.nsw.edu.au

St Georges Basin Public School (3673)
Tallyan Point Rd Basin View 2540
Ph 02 4443 4251 Fax 02 4443 4835
Batemans Bay SEG P3 TP1
stgeorgesb-p.school@det.nsw.edu.au

St Helens Park Public School (4603)
Kellerman Drive St Helens Park 2560
Ph 02 4621 1201, 02 4621 1213 Fax 02 4621 1226
Campbelltown SEG P3 TP2
sthelenspk-p.school@det.nsw.edu.au

St Ives High School (8400)
Yarrabung Rd St Ives 2075
Ph 02 9144 1689, 02 9144 6555 Fax 02 9449 7074
North Shore Network SEG S8 TP1
stives-h.school@det.nsw.edu.au

St Ives North Public School (4293)
87 Memorial Ave St Ives 2075
Ph 02 9144 7743, 02 9449 3206 Fax 02 9983 9335
North Shore Network SEG P2 TP1
stivesnth-p.school@det.nsw.edu.au

St Ives Park Public School (4400)
Woodbury & Acron Rds St Ives 2075
Ph 02 9144 4085 Fax 02 9988 3890
North Shore Network SEG P4 TP1
stivespark-p.school@det.nsw.edu.au

St Ives Public School (4331)
Horace St St Ives 2075
(PO Box 521 ST IVES 2075)
Ph 02 9144 1092, 02 9983 9990 Fax 02 9983 9336
North Shore Network SEG P3 TP1
stives-p.school@det.nsw.edu.au

St Johns Park High School (8531)
Mimosa Rd St Johns Park 2176
Ph 02 9610 8035 Fax 02 9823 7827
Hoxton SEG S8 TP2
stjohnspk-h.school@det.nsw.edu.au

St Johns Park Public School (3029)
Sandringham St St Johns Park 2176
Ph 02 9610 3488, 02 9610 1311 Fax 02 9823 7829
Fairfield SEG P1 TP2
stjohnspk-p.school@det.nsw.edu.au

St Marys North Public School (4205)
Willow Rd St Marys 2760
Ph 02 9623 1443, 02 9623 1505 Fax 02 9833 1283
Mt Druitt SEG P3 TP4
stmarysnth-p.school@det.nsw.edu.au

St Marys Public School (3031)
Princess Mary St St Marys 2760
Ph 02 9623 1968, 02 9623 9393 Fax 02 9833 1228
Minchinbury SEG P4 TP2
stmarys-p.school@det.nsw.edu.au

St Marys Senior High School (8870)
Kalang Ave St Marys 2760
Ph 02 9623 8333 Fax 02 9833 1304
Minchinbury SEG S9 TP1
stmaryssen-h.school@det.nsw.edu.au

St Marys South Public School (4279)
96 Monfarville St St Marys 2760
Ph 02 9623 1745, 02 9623 1825 Fax 02 9833 1287
Minchinbury SEG P4 TP2
stmarysth-p.school@det.nsw.edu.au

St Peters Public School (3032)
Church St St Peters 2044
Ph 02 9519 6307 Fax 02 9550 4586
Network 8 SEG P5 TP1
stpeters-p.school@det.nsw.edu.au

Stanford Merthyr Infants School (5133)
Maitland St Stanford Merthyr 2327
Ph 02 4937 1192 Fax 02 4936 1178
Hunter/Central Coast 9 SEG P5 TP1
stanmerthi-p.school@det.nsw.edu.au

Stanmore Public School (7436)
Cnr Cambridge and Holt St Stanmore 2048
Ph 02 9569 1638, 02 9560 2028 Fax 02 9550 9542
Network 8 SEG P2 TP1
stanmore-p.school@det.nsw.edu.au

Stanwell Park Public School (3103)
Stanwell Ave Stanwell Park 2508
Ph 02 4294 1191 Fax 02 4294 3691
Wollongong North SEG P4 TP1
stanwellpk-p.school@det.nsw.edu.au

Stewart House School (5515)
22 Ellen St Harbord 2096
(PO Box 21 Harbord 2096)
Ph 02 9938 3822 Fax 02 9905 6491
Peninsula Network SEG SSP3 TP1
stewarthou-s.school@det.nsw.edu.au

Stockinbingal Public School (3109)
Britannia St Stockinbingal 2725
Ph 02 6943 1477 Fax 02 6943 1540
Riverina Central SEG P5 TP2 A 8
stockinbin-p.school@det.nsw.edu.au

Stockton Public School (3110)
10 Clyde St Stockton 2295
Ph 02 4928 1101, 02 4928 1233 Fax 02 4920 1224
Hunter/Central Coast 4 SEG P4 TP1
stockton-p.school@det.nsw.edu.au

Stokers Siding Public School (3112)
Old Pacific Hwy Stokers Siding 2484
Ph 02 6677 9236 Fax 02 6677 9454
Far North Coast SEG P5 TP1 A 10
stokerssid-p.school@det.nsw.edu.au

Stratford Public School (3119)
Bucketts Way Stratford 2422
Ph 02 6558 8234 Fax 02 6558 8247
Lower North Coast SEG P5 TP1 A 9
stratford-p.school@det.nsw.edu.au

Stratheden Public School (3122)
710 Stratheden Rd Stratheden 2470
Ph 02 6667 3266 Fax 02 6667 3241
Richmond Valley SEG P5 TP1 A 8
stratheden-p.school@det.nsw.edu.au

Strathfield Girls High School (8169)
Albert Rd Strathfield 2135
Ph 02 9746 6990, 02 9746 9219 Fax 02 9746 3517
Strathfield SEG S8 TP1
strathfieg-h.school@det.nsw.edu.au

Strathfield North Public School (3123)
251 Concord Rd North Strathfield 2137
(PO Box 35 North Strathfield 2137)
Ph 02 9743 2126, 02 9736 1467 Fax 02 9743 4775
Strathfield SEG P2 TP1
strathfien-p.school@det.nsw.edu.au

Strathfield South High School (8252)
Hedges Ave Enfield 2136
Ph 02 9642 4649, 02 9642 8195 Fax 02 9742 5942
Strathfield SEG S9 TP1
strathfies-h.school@det.nsw.edu.au

Strathfield South Public School (3124)
457 Liverpool Rd Enfield 2136
Ph 02 9642 1359, 02 9642 1835 Fax 02 9742 5878
Strathfield SEG P1 TP1
strathfies-p.school@det.nsw.edu.au

Stroud Public School (3125)
Erin St Stroud 2425
Ph 02 4994 5255 Fax 02 4994 5408
Lower North Coast SEG P5 TP1
stroud-p.school@det.nsw.edu.au

Stroud Road Public School (3126)
Bucketts Way Stroud Road 2415
Ph 02 4994 5276, 02 4994 5418 Fax 02 4994 5418
Lower North Coast SEG P5 TP1
stroudroad-p.school@det.nsw.edu.au

Stuart Town Public School (3127)
Burrendong Way Stuart Town 2820
Ph 02 6846 8243 Fax 02 6846 8345
Dubbo SEG P6 TP4 A 6
stuarttown-p.school@det.nsw.edu.au

Stuarts Point Public School (3643)
Banksia Rd Stuarts Point 2441
Ph 02 6569 0627 Fax 02 6569 0534
Mid North Coast SEG P5 TP1 A 10
stuartspt-p.school@det.nsw.edu.au

Sturt Public School (4457)
White Ave Wagga Wagga 2650
(PO Box 8517 Kooringal 2650)
Ph 02 6922 5087 Fax 02 6926 1243
Riverina East SEG P3 TP1
sturt-p.school@det.nsw.edu.au

Summer Hill Public School (3129)
Moonbie St Summer Hill 2130
Ph 02 9797 8160, 02 9799 2280 Fax 02 9716 8003
Inner West SEG P1 TP1
summerhill-p.school@det.nsw.edu.au

Sunning Hill School (5571)
169 Joseph St Lidcombe 2141
Ph 02 8737 5025 Fax 02 8737 5041
Bankstown SEG SSP4 TP1
sunninghil-s.school@det.nsw.edu.au

Sunshine Bay Public School **(4562)**
Beach Rd Batehaven 2536
Ph 02 4472 6464, 02 4472 6522 Fax 02 4472 6587
Batemans Bay SEG P3 TP1
sunshineba-p.school@det.nsw.edu.au

Surveyors Creek Public School **(4631)**
St Andrews Drive Glenmore Park 2745
Ph 02 4737 9571, 02 4737 9751 Fax 02 4737 9346
Penrith Valley SEG P2 TP1
surveyorsc-p.school@det.nsw.edu.au

Sussex Inlet Public School **(3659)**
Thomson St Sussex Inlet 2540
Ph 02 4441 2053 Fax 02 4441 1729
Batemans Bay SEG P4 TP1
sussexinle-p.school@det.nsw.edu.au

Sutherland Hospital School **(5546)**
Child Adolescent Unit Lev 3 Kingsway Caringbah 2229
Ph 02 9540 7669 Fax 02 9540 4816
Botany Bay SEG SSP4 TP1
sutherhos-s.school@det.nsw.edu.au

Sutherland North Public School **(3822)**
Auburn St Sutherland 2232
Ph 02 9521 2226, 02 9521 1115 Fax 02 9545 1715
Woronora River SEG P4 TP1
sutherlann-p.school@det.nsw.edu.au

Sutherland Public School **(3136)**
Eton St Sutherland 2232
Ph 02 9521 2478, 02 9521 2802 Fax 02 9545 3259
Woronora River SEG P4 TP1
sutherland-p.school@det.nsw.edu.au

Sutton Forest Public School **(3138)**
Illawarra Hwy Sutton Forest 2577
(PO Box 1094 Moss Vale 2577)
Ph 02 4868 1430 Fax 02 4868 3527
Goulburn/Highlands SEG P5 TP1
suttonfore-p.school@det.nsw.edu.au

Sutton Public School **(3137)**
Bywong St Sutton 2620
Ph 02 6230 3215 Fax 02 6230 3327
Queanbeyan SEG P5 TP1 A C
sutton-p.school@det.nsw.edu.au

Swansea High School **(8389)**
Park Ave Caves Beach 2281
Ph 02 4971 1761 Fax 02 4972 1378
Hunter/Central Coast 7 SEG S9 TP1
swansea-h.school@det.nsw.edu.au

Swansea Public School **(3141)**
Rawson St Swansea 2281
Ph 02 4971 1267 Fax 02 4972 1354
Hunter/Central Coast 7 SEG P4 TP1
swansea-p.school@det.nsw.edu.au

Sydney Boys High School **(8137)**
Moore Park Surry Hills 2010
Ph 02 9361 6910, 02 9361 6970 Fax 02 9361 6206
Port Jackson SEG S8 TP1
sydneyboys-h.school@det.nsw.edu.au

Sydney Childrens Hospital School **(5545)**
Level 0, High St Randwick 2031
Ph 02 9399 7119 Fax 02 9399 8925
Botany Bay SEG SSP5 TP1
sydchnhos-s.school@det.nsw.edu.au

Sydney Distance Education High School **(8587)**
Forbes St Woolloomooloo 2011
(Locked Bag 5000 Potts Point 1335)
Ph 02 9383 0200 Fax 02 9383 0222
Network 8 SEG S8 TP1
sydneyh-d.school@det.nsw.edu.au

Sydney Distance Education Primary School **(4586)**
Cnr Cambridge St Stanmore 2048
(Private Bag 2 Newtown 2042)
Ph 02 9568 9888 Fax 02 9568 9827
Network 8 SEG P4 TP1
syddisted-d.school@det.nsw.edu.au

Sydney Girls High School **(8138)**
Moore Park Surry Hills 2010
Ph 02 9331 2336, 02 9331 1627 Fax 02 9360 9702
Port Jackson SEG S8 TP1
sydneygirl-h.school@det.nsw.edu.au

Sydney Secondary College Balmain Campus **(8484)**
Terry St Rozelle 2039
Ph 02 9810 0471, 02 9810 0472 Fax 02 9555 7340
Port Jackson SEG S9 TP1
balmain-h.school@det.nsw.edu.au

Sydney Secondary College Blackwattle Bay Campus **(8539)**
Taylor St Glebe 2037
Ph 02 9660 5688, 02 9660 5022 Fax 02 9552 1796
Port Jackson SEG S9 TP1
sscbwattle-h.school@det.nsw.edu.au

Sydney Secondary College Leichhardt Campus **(8507)**
Balmain Rd Leichhardt 2040
Ph 02 9560 2565, 02 9560 2355 Fax 02 9550 9397
Port Jackson SEG S9 TP1
leichhardt-h.school@det.nsw.edu.au

Sydney Technical High School **(8141)**
Forest Rd Bexley 2207
Ph 02 9587 5899, 02 9587 5403 Fax 02 9553 8315
Georges River SEG S8 TP1
sydneytech-h.School@det.nsw.edu.au

Sylvania Heights Public School **(4024)**
Lisbon St Sylvania Heights 2224
Ph 02 9522 0111, 02 9522 0637 Fax 02 9544 7623
Port Hacking SEG P2 TP1
sylvaniaht-p.school@det.nsw.edu.au

Sylvania High School (8463)
Bellingara Rd Sylvania 2224
Ph 02 9522 9951, 02 9522 9820 Fax 02 9544 7246
Port Hacking SEG S9 TP1
sylvania-h.school@det.nsw.edu.au

Sylvania Public School (3143)
Princes Hwy Sylvania 2224
Ph 02 9522 7277 Fax 02 9544 7019
Port Hacking SEG P5 TP1
sylvania-p.school@det.nsw.edu.au

Table Top Public School (3534)
Hume Hwy Table Top 2640
Ph 02 6026 2220 Fax 02 6026 2402
Riverina South SEG P5 TP2 A 10
tabletop-p.school@det.nsw.edu.au

Tabulam Public School (3145)
Clarence St Tabulam 2469
Ph 02 6666 1219 Fax 02 6666 1357
Richmond Valley SEG P5 TP4 A 5
tabulam-p.school@det.nsw.edu.au

Tacking Point Public School (4617)
Bangalay Drive Port Macquarie 2444
Ph 02 6582 3478 Fax 02 6582 2326
Hastings SEG P1 TP1
tackingpt-p.school@det.nsw.edu.au

Tacoma Public School (3147)
Hillcrest Ave Tacoma 2259
Ph 02 4353 1154 Fax 02 4351 2854
Hunter/Central Coast 2 SEG P4 TP1
tacoma-p.school@det.nsw.edu.au

Tahmoor Public School (3148)
Bronzewing St Tahmoor 2573
Ph 02 4681 8979, 02 4681 8340 Fax 02 4683 1067
Macarthur SEG P3 TP1
tahmoor-p.school@det.nsw.edu.au

Talbingo Public School (4374)
Lampe St Talbingo 2720
Ph 02 6949 5209 Fax 02 6949 5370
Riverina East SEG P6 TP4 A 6C
talbingo-p.school@det.nsw.edu.au

Tallimba Public School (3153)
Kikoira St Tallimba 2669
Ph 02 6975 7251 Fax 02 6975 7258
Riverina North West SEG P5 TP6 A 7
tallimba-p.school@det.nsw.edu.au

Tallong Public School (3154)
Old Marulan Rd Tallong 2579
Ph 02 4841 0292 Fax 02 4841 0240
Goulburn/Highlands SEG P5 TP1
tallong-p.school@det.nsw.edu.au

Tallowood School (5459)
44-68 Redden Dr Kellyville 2155
Ph 02 9836 3810, 02 8814 6094 Fax 02 9836 3973
The Hills SEG SSP3 TP1
tallowood-s.school@det.nsw.edu.au

Tambar Springs Public School (3156)
Mullaley-Coolah Rd Tambar Springs 2381
Ph 02 6744 2343 Fax 02 6744 2400
New England South SEG P6 TP4 A 5
tambarspr-p.school@det.nsw.edu.au

Tamworth High School (8139)
Willis St Tamworth South 2340
(PO Box 5348 Tamworth South 2340)
Ph 02 6765 7888 Fax 02 6762 1264
New England South SEG S9 TP1
tamworth-h.school@det.nsw.edu.au

Tamworth Public School (3157)
Napier St Tamworth 2340
Ph 02 6766 2016, 02 6766 3288 Fax 02 6766 2438
New England Central SEG P2 TP1
tamworth-p.school@det.nsw.edu.au

Tamworth South Public School (3882)
Petra Ave Tamworth 2340
Ph 02 6765 8426, 02 6765 9556 Fax 02 6762 1225
New England South SEG P1 TP1
tamworths-p.school@det.nsw.edu.au

Tamworth West Public School (3158)
Bridge St West Tamworth 2340
Ph 02 6765 8316, 02 6765 9203 Fax 02 6762 1226
New England South SEG P4 TP1
tamworthw-p.school@det.nsw.edu.au

Tangara School (5684)
Bong Bong Rd Mittagong 2575
(PO Box 726 Mittagong 2575)
Ph 02 4871 1636 Fax 02 4872 1463
Goulburn/Highlands SEG SSP5 TP1
tangara-s.school@det.nsw.edu.au

Tanilba Bay Public School (4547)
1a King Albert Ave Tanilba Bay 2319
Ph 02 4982 4762, 02 4982 4763 Fax 02 4982 3112
Hunter/Central Coast 10 SEG P2 TP1
tanilbabay-p.school@det.nsw.edu.au

Tanja Public School (3159)
Barrabooka Rd Tanja 2550
Ph 02 6494 0122 Fax 02 6494 0245
Sapphire Coast/Monaro SEG P6 TP1 A 10
tanja-p.school@det.nsw.edu.au

Tarago Public School (3162)
Goulburn-Braidwood Rd Tarago 2580
Ph 02 4849 4418 Fax 02 4849 4462
Queanbeyan SEG P5 TP1 A C
tarago-p.school@det.nsw.edu.au

Taralga Public School (3163)
Orchard St Taralga 2580
Ph 02 4840 2047 Fax 02 4840 2152
Queanbeyan SEG P5 TP2
taralga-p.school@det.nsw.edu.au

Tarcutta Public School (3165)
Centenary Ave Tarcutta 2652
Ph 02 6928 7191 Fax 02 6928 7254
Riverina North SEG P5 TP2 A 7
tarcutta-p.school@det.nsw.edu.au

Taree High School (8140)
Albert St Taree 2430
Ph 02 6552 1166, 02 6552 1347 Fax 02 6551 2017
Manning Camden Haven SEG S8 TP1
taree-h.school@det.nsw.edu.au

Taree Public School (3167)
Albert St Taree 2430
Ph 02 6552 1233, 02 6552 1436 Fax 02 6551 2167
Manning Camden Haven SEG P5 TP1
taree-p.school@det.nsw.edu.au

Taree West Public School (3909)
Wingham Rd Taree 2430
(PO Box 986 Taree 2430)
Ph 02 6552 1910, 02 6552 2679 Fax 02 6551 0751
Manning Camden Haven SEG P2 TP1
tareewest-p.school@det.nsw.edu.au

Taren Point Public School (3168)
93 Woodlands Rd Taren Point 2229
Ph 02 9524 6379, 02 9524 0191 Fax 02 9540 4794
Network 8 SEG P5 TP1
tarenpoint-p.school@det.nsw.edu.au

Tarrawanna Public School (3820)
Kendall St Tarrawanna 2518
Ph 02 4284 4662 Fax 02 4285 1389
Wollongong North SEG P5 TP1
tarrawanna-p.school@det.nsw.edu.au

Tarro Public School (4263)
Eastern Ave Tarro 2322
Ph 02 4966 1255 Fax 02 4964 1154
Hunter/Central Coast 4 SEG P5 TP1
tarro-p.school@det.nsw.edu.au

Tathra Public School (3173)
Bega St Tathra 2550
Ph 02 6494 1291 Fax 02 6494 1057
Sapphire Coast/Monaro SEG P4 TP1 A 10
tathra-p.school@det.nsw.edu.au

Taverners Hill Infants School (5112)
Elswick St Petersham 2049
Ph 02 9569 6396 Fax 02 9564 2120
Inner City SEG P5 TP1
tavernersh-p.school@det.nsw.edu.au

Tea Gardens Public School (3175)
Witt St Tea Gardens 2324
Ph 02 4997 0286 Fax 02 4997 1254
Lower North Coast SEG P4 TP1
teagardens-p.school@det.nsw.edu.au

Telarah Public School (2177)
Raymond St Maitland 2320
Ph 02 4932 8477, 02 4932 8461 Fax 02 4932 4475
Hunter/Central Coast 8 SEG P2 TP1
telarah-p.school@det.nsw.edu.au

Telegraph Point Public School (3176)
Pacific Hwy Telegraph Point 2441
Ph 02 6585 0224 Fax 02 6585 0550
Hastings SEG P5 TP1 A 8
telegrappt-p.school@det.nsw.edu.au

Telopea Public School (4103)
Sturt St Telopea 2117
Ph 02 9638 1296, 02 9638 2077 Fax 02 9638 0197
Cumberland SEG P5 TP1
telopea-p.school@det.nsw.edu.au

Temora High School (8168)
Anzac St Temora 2666
Ph 02 6977 1988 Fax 02 6977 4197
Riverina Central SEG S9 TP2
temora-h.school@det.nsw.edu.au

Temora Public School (3178)
De Boos St Temora 2666
Ph 02 6977 2113 Fax 02 6977 2132
Riverina Central SEG P4 TP2
temora-p.school@det.nsw.edu.au

Temora West Public School (4209)
Truskett St Temora 2666
Ph 02 6977 1889 Fax 02 6977 1376
Riverina Central SEG P4 TP2
temorawest-p.school@det.nsw.edu.au

Tempe High School (8506)
Unwins Bridge Rd Tempe 2044
Ph 02 9558 2336, 02 9558 2023 Fax 02 9558 9460
Inner City SEG S9 TP1
tempe-h.school@det.nsw.edu.au

Tempe Public School (3948)
Unwins Bridge Rd Tempe 2044
Ph 02 9558 3780, 02 9559 5770 Fax 02 9558 8940
Inner City SEG P4 TP1
tempe-p.school@det.nsw.edu.au

Tenambit Public School (3180)
Edward St Tenambit 2323
Ph 02 4933 7196 Fax 02 4933 7999
Hunter/Central Coast 9 SEG P3 TP1
tenambit-p.school@det.nsw.edu.au

Tenterfield High School **(8358)**
High St Tenterfield 2372
Ph 02 6736 1138 Fax 02 6736 2899
New England North SEG S9 TP2
tenterfiel-h.school@det.nsw.edu.au

Teralba Public School **(3183)**
York St Teralba 2284
(PO Box 3020 Teralba 2284)
Ph 02 4958 2117 Fax 02 4958 2965
Hunter/Central Coast 6 SEG P5 TP1
teralba-p.school@det.nsw.edu.au

Terara Public School **(3185)**
Millbank Rd Terara 2540
Ph 02 4421 6034 Fax 02 4423 1752
Shoalhaven SEG P5 TP1
terara-p.school@det.nsw.edu.au

Terranora Public School **(3189)**
650 Terranora Rd Terranora 2486
(PO Box 74 Terranora 2486)
Ph 07 5590 4146 Fax 07 5590 4098
Far North Coast SEG P3 TP1 A 10
terranora-p.school@det.nsw.edu.au

Terrey Hills Public School **(3190)**
Cooyong Rd Terrey Hills 2084
Ph 02 9450 1612 Fax 02 9486 3174
Middle Harbour Network SEG P4 TP1
terreyhill-p.school@det.nsw.edu.au

Terrigal High School **(8533)**
Charles Kay Drive Terrigal 2260
Ph 02 4384 4677 Fax 02 4385 2469
Hunter/Central Coast 2 SEG S8 TP1
terrigal-h.school@det.nsw.edu.au

Terrigal Public School **(3191)**
Havenview Rd Terrigal 2260
Ph 02 4384 4599 Fax 02 4385 2470
Hunter/Central Coast 2 SEG P2 TP1
terrigal-p.school@det.nsw.edu.au

Teven-Tintenbar Public School **(4578)**
Fredricks Lane Tintenbar 2478
Ph 02 6687 8210 Fax 02 6687 8086
Southern Cross SEG P4 TP1 A 10
teventint-p.school@det.nsw.edu.au

Thalgarrah Environmental Education Centre **(5680)**
Rockvale Rd Armidale 2350
Ph 02 6775 1736 Fax 02 6775 1681
New England North SEG EEC1 TP1 A 9C
thalgarrah-e.school@det.nsw.edu.au

Tharawal Public School **(4573)**
Gerald Rd Menai 2234
Ph 02 9543 5000, 02 9543 5488 Fax 02 9543 5488
Woronora River SEG P3 TP1
tharawal-p.school@det.nsw.edu.au

Tharbogang Public School **(3195)**
75 Braithwaite Rd Tharbogang 2680
Ph 02 6963 6242 Fax 02 6963 6356
Riverina North West SEG P5 TP2
tharbogan-p.school@det.nsw.edu.au

THE
Schools whose name includes THE are listed under the main name, eg for THE JUNCTION see JUNCTION, THE.

Thirlmere Public School **(3200)**
Oaks Rd Thirlmere 2572
Ph 02 4681 8476 Fax 02 4681 8727
Macarthur SEG P3 TP1
thirlmere-p.school@det.nsw.edu.au

Thirroul Public School **(3201)**
Roxburgh Ave Thirroul 2515
(PO Box 254 Thirroul 2515)
Ph 02 4267 1469 Fax 02 4268 1463
Wollongong North SEG P3 TP1
thirroul-p.school@det.nsw.edu.au

Thomas Acres Public School **(4539)**
Crispsparkle Drive Ambarvale 2560
Ph 02 4626 4577, 02 4626 4755 Fax 02 4626 8488
Campbelltown SEG P2 TP2
thomasacre-p.school@det.nsw.edu.au

Thomas Reddall High School **(8589)**
Cnr Woodhouse Drive & Jaggers Place Ambarvale 2560
Ph 02 4625 4404 Fax 02 4628 1453
Campbelltown SEG S9 TP2
thomasredd-h.school@det.nsw.edu.au

Thornleigh West Public School **(4276)**
Giblett Ave Thornleigh 2120
Ph 02 9484 4242 Fax 02 9481 9471
Hills Network SEG P2 TP1
thornleigw-p.school@det.nsw.edu.au

Thornton Public School **(3204)**
Government Rd Thornton 2322
Ph 02 4964 1369 Fax 02 4964 1157
Hunter/Central Coast 4 SEG P2 TP1
thornton-p.school@det.nsw.edu.au

Thurgoona Public School **(3208)**
Bottlebrush St Thurgoona 2640
Ph 02 6043 1244 Fax 02 6043 2045
Riverina South SEG P3 TP1
thurgoona-p.school@det.nsw.edu.au

Tibooburra Outback School of the Air **(3211)**
Briscoe St Tibooburra 2880
Ph 08 8091 3317 Fax 08 8091 3496
Broken Hill SEG P5 TP8 A 1HL
tibooburra-d.school@det.nsw.edu.au

Tighes Hill Public School (3213)
Elizabeth St Tighes Hill 2297
Ph 02 4969 3720, 02 4969 3703 Fax 02 4961 2334
Hunter/Central Coast 5 SEG P4 TP1
tigheshill-p.school@det.nsw.edu.au

Timbumburi Public School (1016)
542 Kia Ora Lane Timbumburi 2340
Ph 02 6767 0232 Fax 02 6767 0245
New England South SEG P5 TP1 A 9
timbumburi-p.school@det.nsw.edu.au

Tingha Public School (3218)
54 Ruby St Tingha 2369
Ph 02 6723 3437 Fax 02 6723 3495
New England North SEG P5 TP6 A 8
tingha-p.school@det.nsw.edu.au

Tinonee Public School (3219)
Manchester St Tinonee 2430
Ph 02 6553 1279 Fax 02 6553 1443
Manning Camden Haven SEG P4 TP1 A 10
tinonee-p.school@det.nsw.edu.au

Tintinhull Public School (3221)
RMB 472 Kootingal 2352
Ph 02 6760 9273 Fax 02 6760 9361
New England Central SEG P5 TP1 A 10
tintinhull-p.school@det.nsw.edu.au

Tirranna Public School (3222)
Goulburn-Braidwood Rd Goulburn 2580
Ph 02 4821 4645 Fax 02 4821 4363
Queanbeyan SEG P6 TP1
tirranna-p.school@det.nsw.edu.au

Tocumwal Public School (3225)
18-20 Morris St Tocumwal 2714
Ph 03 5874 2128 Fax 03 5874 2281
Riverina South West SEG P5 TP2
tocumwal-p.school@det.nsw.edu.au

Tolland Public School (4410)
Hawkes Place Wagga Wagga 2650
(PO Box 7370 Mount Austin 2650)
Ph 02 6931 1223, 02 6931 1263 Fax 02 6931 4312
Riverina North SEG P3 TP1
tolland-p.school@det.nsw.edu.au

Tomaree High School (8502)
Salamander Way Salamander Bay 2317
Ph 02 4981 1444, 02 4981 1034 Fax 02 4984 1524
Hunter/Central Coast 10 SEG S8 TP1
tomaree-h.school@det.nsw.edu.au

Tomaree Public School (2723)
Salamander Way Salamander Bay 2317
(PO Box 710 Nelson Bay 2315)
Ph 02 4981 1595 Fax 02 4984 2275
Hunter/Central Coast 10 SEG P3 TP1
tomaree-p.school@det.nsw.edu.au

Tomerong Public School (3226)
355 Hawkens Rd Tomerong 2540
Ph 02 4443 4376 Fax 02 4443 5073
Batemans Bay SEG P4 TP1
tomerong-p.school@det.nsw.edu.au

Tooleybuc Central School (3235)
Murray St Tooleybuc 2736
Ph 03 5030 5422 Fax 03 5030 5408
Riverina South West SEG C3 TP6 A 7HL
tooleybuc-c.school@det.nsw.edu.au

Toomelah Public School (3239)
off Old Bruxner Hwy Boggabilla 2409
(PO Box 134 Boggabilla 2409)
Ph 07 4676 2223 Fax 07 4676 2461
New England West SEG P5 TP8 A 6HL
toomelah-p.school@det.nsw.edu.au

Toongabbie East Public School (4366)
Harris Rd Wentworthville 2145
Ph 02 9631 3996, 02 9636 2706 Fax 02 9896 3191
The Hills SEG P5 TP1
toongabest-p.school@det.nsw.edu.au

Toongabbie Public School (3240)
Fitzwilliam Rd Toongabbie 2146
Ph 02 9631 3079, 02 9631 8649 Fax 02 9896 3292
The Hills SEG P2 TP1
toongabbie-p.school@det.nsw.edu.au

Toongabbie West Public School (4364)
Ballandella Rd Toongabbie 2146
Ph 02 9631 3610, 02 9631 1746 Fax 02 9636 8623
The Hills SEG P4 TP1
toongabwst-p.school@det.nsw.edu.au

Tooraweenah Public School (3242)
Bridge St Tooraweenah 2831
Ph 02 6848 1073 Fax 02 6848 1045
Warrumbungle SEG P6 TP4 A 5
tooraweena-p.school@det.nsw.edu.au

Toormina High School (8527)
Armstrong Drive Toormina 2452
Ph 02 6653 3077 Fax 02 6658 2310
Coffs Harbour SEG S8 TP1
toormina-h.school@det.nsw.edu.au

Toormina Public School (4506)
Cavanba Rd Toormina 2452
Ph 02 6653 2122, 02 6653 2040 Fax 02 6658 2287
Coffs Harbour SEG P2 TP1
toormina-p.school@det.nsw.edu.au

Toronto High School (8909)
Field Ave Toronto 2283
Ph 02 4959 1770, 02 4959 1788 Fax 02 4950 4459
Hunter/Central Coast 6 SEG S9 TP1
toronto-h.school@det.nsw.edu.au

Toronto Public School **(3247)**
Renwick St Toronto 2283
(PO Box 910 Toronto 2283)
Ph 02 4959 1571, 02 4959 1403 Fax 02 4950 4717
Hunter/Central Coast 6 SEG P4 TP1
toronto-p.school@det.nsw.edu.au

Tottenham Central School **(3249)**
Merilba St Tottenham 2873
Ph 02 6892 4006 Fax 02 6892 4159
Dubbo SEG C4 TP6 A 6HL
tottenham-c.school@det.nsw.edu.au

Toukley Public School **(3250)**
Main Rd Toukley 2263
Ph 02 4396 4275, 02 4396 3277 Fax 02 4397 1586
Hunter/Central Coast 2 SEG P2 TP1
toukley-p.school@det.nsw.edu.au

Towamba Public School **(3252)**
Towamba St Towamba 2550
Ph 02 6496 7159 Fax 02 6496 7059
Sapphire Coast/Monaro SEG P5 TP4 A 7
towamba-p.school@det.nsw.edu.au

Tower Street Public School **(4151)**
74 Tower St Panania 2213
Ph 02 9773 6017 Fax 02 9792 3905
East Hills SEG P4 TP1
towerst-p.school@det.nsw.edu.au

Towradgi Public School **(3866)**
Carters Lane Fairy Meadow 2519
Ph 02 4284 4527 Fax 02 4284 8826
Wollongong North SEG P5 TP1
towradgi-p.school@det.nsw.edu.au

Trangie Central School **(3254)**
Derribong St Trangie 2823
Ph 02 6888 7578 Fax 02 6888 7602
Dubbo SEG C3 TP4 A L
trangie-c.school@det.nsw.edu.au

Tregeagle Public School **(3255)**
Tregeagle Rd Tregeagle 2480
Ph 02 6629 5220 Fax 02 6629 5398
Southern Cross SEG P5 TP1 A 10
tregeagle-p.school@det.nsw.edu.au

Tregear Public School **(4402)**
Wilkes Cres Tregear 2770
Ph 02 9628 6301, 02 9628 6895 Fax 02 9628 3692
Mt Druitt SEG P2 TP4
tregear-p.school@det.nsw.edu.au

Trundle Central School **(3259)**
Croft St Trundle 2875
Ph 02 6892 1346 Fax 02 6892 1184
Dubbo SEG C4 TP6 A 8L
trundle-c.school@det.nsw.edu.au

Trunkey Public School **(3260)**
Bathurst-Goulburn Rd Trunkey Creek 2795
Ph 02 6368 8648 Fax 02 6368 8639
Orange SEG P6 TP4 A 5C
trunkey-p.school@det.nsw.edu.au

Truscott Street Public School **(4164)**
Truscott St North Ryde 2113
Ph 02 9878 1264 Fax 02 9878 5794
Lane Cove Network SEG P3 TP1
truscottst-p.school@det.nsw.edu.au

Tucabia Public School **(3263)**
Mookin St Tucabia 2462
Ph 02 6644 8217 Fax 02 6644 8172
Clarence SEG P5 TP1 A 7
tucabia-p.school@det.nsw.edu.au

Tuggerah Lakes Secondary College Berkeley Vale Campus **(8563)**
Berkeley Rd Berkeley Vale 2261
Ph 02 4388 1899 Fax 02 4388 5539
Hunter/Central Coast 1 SEG S8 TP1
berkeleyva-h.school@det.nsw.edu.au

Tuggerah Lakes Secondary College The Entrance Campus **(8465)**
The Entrance Rd Long Jetty 2261
Ph 02 4332 2944 Fax 02 4332 3543
Hunter/Central Coast 1 SEG S9 TP1
thentrance-h.school@det.nsw.edu.au

Tuggerah Lakes Secondary College Tumbi Umbi Campus **(8274)**
Bellevue Rd Tumbi Umbi 2261
Ph 02 4385 6802 Fax 02 4385 6805
Hunter/Central Coast 1 SEG S8 TP1
tumbiumbi-h.school@det.nsw.edu.au

Tuggerah Public School **(3269)**
63 Pacific Hwy Tuggerah 2259
Ph 02 4352 1116 Fax 02 4351 2827
Hunter/Central Coast 2 SEG P3 TP1
tuggerah-p.school@det.nsw.edu.au

Tuggerawong Public School **(4097)**
Cadonia Rd Tuggerawong 2259
Ph 02 4392 1542 Fax 02 4393 1650
Hunter/Central Coast 2 SEG P4 TP1
tuggerawon-p.school@det.nsw.edu.au

Tullamore Central School **(3270)**
Hinkler St Tullamore 2874
Ph 02 6892 5005 Fax 02 6892 5109
Dubbo SEG C4 TP6 A 7HL
tullamore-c.school@det.nsw.edu.au

Tullibigeal Central School **(3272)**
Kurrajong St Tullibigeal 2669
Ph 02 6972 9105 Fax 02 6972 9267
Riverina North West SEG C4 TP6 A 4HL
tullibigea-c.school@det.nsw.edu.au

Tullimbar Public School **(4649)**
Exeter Place Tullimbar 2527
Ph 02 4257 7261 Fax 02 4257 8153
Shellharbour SEG P4 TP1
tullimbar-p.school@det.nsw.edu.au

Tulloona Public School **(4225)**
Boori Rd Tulloona 2400
Ph 02 6754 7160 Fax 02 6754 7180
New England West SEG P6 TP8 A 4HL
tulloona-p.school@det.nsw.edu.au

Tumbarumba High School **(8450)**
101 Tooma Road Tumbarumba 2653
Ph 02 6948 2500 Fax 02 6948 2611
Riverina East SEG S9 TP4 A 8
tumbarumba-h.school@det.nsw.edu.au

Tumbarumba Public School **(3275)**
Murray St Tumbarumba 2653
Ph 02 6948 2048 Fax 02 6948 2519
Riverina East SEG P4 TP4 A 8
tumbarumba-p.school@det.nsw.edu.au

Tumbulgum Public School **(3277)**
Fawcett St Tumbulgum 2490
Ph 02 6676 6237 Fax 02 6676 6149
Far North Coast SEG P5 TP1 A 10
tumbulgum-p.school@det.nsw.edu.au

Tumut High School **(8343)**
Bogong Place Tumut 2720
(PO Box 70 Tumut 2720)
Ph 02 6947 1077 Fax 02 6947 2497
Riverina East SEG S9 TP2
tumut-h.school@det.nsw.edu.au

Tumut Public School **(3278)**
175-181 Wynyard St Tumut 2720
(PO Box 289 Tumut 2720)
Ph 02 6947 2053, 02 6947 1626 Fax 02 6947 2722
Riverina East SEG P3 TP2
tumut-p.school@det.nsw.edu.au

Tuncurry Public School **(4533)**
Tuncurry St Tuncurry 2428
Ph 02 6554 6463 Fax 02 6555 6903
Lower North Coast SEG P2 TP1
tuncurry-p.school@det.nsw.edu.au

Tuntable Creek Public School **(3283)**
The Channon Tuntable Creek 2480
Ph 02 6688 6212 Fax 02 6688 6397
The Wilson SEG P5 TP1 A 8
tuntableck-p.school@det.nsw.edu.au

Turramurra High School **(8435)**
Maxwell St Turramurra South 2074
(Maxwell St Turramurra 2074)
Ph 02 9449 4233 Fax 02 9983 9332
North Shore Network SEG S8 TP1
turramurra-h.school@det.nsw.edu.au

Turramurra North Public School **(3288)**
237 Bobbin Head Rd North Turramurra 2074
(PO Box 3134 North Turramurra 2074)
Ph 02 9144 4107, 02 9449 3164 Fax 02 9988 4936
North Shore Network SEG P3 TP1
turramurrn-p.school@det.nsw.edu.au

Turramurra Public School **(3855)**
Kissing Point Rd Turramurra 2074
Ph 02 9983 9455, 02 9983 9464 Fax 02 9983 9337
North Shore Network SEG P2 TP1
turramurra-p.school@det.nsw.edu.au

Turvey Park Public School **(4144)**
31 Halloran Street Wagga Wagga 2650
Ph 02 6925 2589 Fax 02 6925 1663
Riverina North SEG P3 TP1
turveypark-p.school@det.nsw.edu.au

Tweed Heads Public School **(3290)**
Stuart St Tweed Heads 2485
Ph 07 5536 1351, 07 5536 1659 Fax 07 5536 8092
Far North Coast SEG P4 TP1
tweedheads-p.school@det.nsw.edu.au

Tweed Heads South Public School **(4111)**
Heffron St Tweed Heads South 2486
Ph 07 5524 3408, 07 5524 3576 Fax 07 5524 3466
Far North Coast SEG P4 TP1
tweedhdest-p.school@det.nsw.edu.au

Tweed River High School **(8370)**
Heffron St Tweed Heads South 2486
Ph 07 5524 3007 Fax 07 5524 9501
Far North Coast SEG S8 TP1
tweedriver-h.school@det.nsw.edu.au

Tyalgum Public School **(3293)**
Coolman St Tyalgum 2484
Ph 02 6679 3300 Fax 02 6679 3497
Far North Coast SEG P5 TP1 A 8
tyalgum-p.school@det.nsw.edu.au

Tyalla Public School **(4503)**
Joyce St Coffs Harbour 2450
Ph 02 6652 4488 Fax 02 6651 4096
Coffs Harbour SEG P3 TP1
tyalla-p.school@det.nsw.edu.au

Uki Public School **(3298)**
Main St Uki 2484
Ph 02 6679 5128 Fax 02 6679 5448
Far North Coast SEG P4 TP1 A 10
uki-p.school@det.nsw.edu.au

Ulan Public School **(3300)**
Main St Ulan 2850
Ph 02 6373 4625 Fax 02 6373 4807
Warrumbungle SEG P5 TP4 A 7
ulan-p.school@det.nsw.edu.au

Ulladulla High School (8495)
South St Ulladulla 2539
(PO Box 132 Ulladulla 2539)
Ph 02 4455 1799 Fax 02 4454 0759
Batemans Bay SEG S8 TP1
ulladulla-h.school@det.nsw.edu.au

Ulladulla Public School (3302)
Green St Ulladulla 2539
Ph 02 4455 1649 Fax 02 4454 0752
Batemans Bay SEG P1 TP1
ulladulla-p.school@det.nsw.edu.au

Ulmarra Public School (3303)
Pacific Hwy Ulmarra 2462
Ph 02 6644 5266 Fax 02 6644 5373
Clarence SEG P5 TP1 A 9
ulmarra-p.school@det.nsw.edu.au

Ulong Public School (3304)
Hutchison St Ulong 2450
Ph 02 6654 5242 Fax 02 6654 5263
Coffs Harbour SEG P5 TP1 A 6
ulong-p.school@det.nsw.edu.au

Ultimo Public School (3305)
Quarry St Ultimo 2007
Ph 02 9660 2130 Fax 02 9692 8823
Inner City SEG P4 TP1
ultimo-p.school@det.nsw.edu.au

Umina Public School (3995)
Sydney Ave Umina Beach 2257
Ph 02 4341 1630, 02 4341 7578 Fax 02 4344 3916
Hunter/Central Coast 3 SEG P1 TP1
umina-p.school@det.nsw.edu.au

Unanderra Public School (3308)
Derribong Drive Cordeaux Heights 2526
Ph 02 4272 8730, 02 4272 8731 Fax 02 4272 8734
Wollongong SEG P2 TP1
unanderra-p.school@det.nsw.edu.au

Undercliffe Public School (3310)
Bayview Ave Earlwood 2206
Ph 02 9558 3432 Fax 02 9559 5997
Inner West SEG P4 TP1
undercliff-p.school@det.nsw.edu.au

Ungarie Central School (3311)
Ungarie-Condobolin Rd Ungarie 2669
Ph 02 6975 9030 Fax 02 6975 9157
Riverina North West SEG C4 TP6 A HL
ungarie-c.school@det.nsw.edu.au

Upper Coopers Creek Public School (3760)
Upper Coopers Creek Rd Upper Coopers Creek 2480
Ph 02 6688 2128 Fax 02 6688 2150
The Wilson SEG P5 TP1 A 7
cooperscrk-p.school@det.nsw.edu.au

Upper Lansdowne Public School (2372)
1399 Upper Lansdowne Rd Upper Lansdowne 2430
Ph 02 6556 9163 Fax 02 6556 9219
Manning Camden Haven SEG P5 TP1 A 6
lansdowneu-p.school@det.nsw.edu.au

Uralla Central School (3864)
Park St Uralla 2358
Ph 02 6778 4204, 02 6778 4116 Fax 02 6778 5090
New England Central SEG C2 TP1 A C
uralla-c.school@det.nsw.edu.au

Urana Central School (3314)
62 William Street Urana 2645
Ph 02 6920 8005 Fax 02 6920 8103
Riverina West SEG C4 TP6 A 9
urana-c.school@det.nsw.edu.au

Uranquinty Public School (1499)
Pearson St Uranquinty 2652
Ph 02 6922 9619 Fax 02 6922 9883
Riverina North SEG P5 TP2 A 9
uranquinty-p.school@det.nsw.edu.au

Urbenville Public School (3316)
Welch & Urben Sts Urbenville 2475
Ph 02 6634 1333 Fax 02 6634 1393
Richmond Valley SEG P5 TP4 A 7
urbenville-p.school@det.nsw.edu.au

Urunga Public School (3318)
Bowra St Urunga 2455
(PO Box 21 Urunga 2455)
Ph 02 6655 6393 Fax 02 6655 5140
Mid North Coast SEG P3 TP1
urunga-p.school@det.nsw.edu.au

Vacy Public School (3321)
786 Gresford Rd Vacy 2421
Ph 02 4938 8153 Fax 02 4938 8207
Hunter/Central Coast 10 SEG P5 TP1
vacy-p.school@det.nsw.edu.au

Valentine Public School (4185)
Tallawalla Rd Valentine 2280
Ph 02 4942 8211 Fax 02 4942 8438
Hunter/Central Coast 7 SEG P2 TP1
valentine-p.school@det.nsw.edu.au

Valley View Public School (4508)
Chamberlain Rd Wyoming 2250
Ph 02 4328 4433 Fax 02 4329 1481
Hunter/Central Coast 2 SEG P2 TP1
valleyview-p.school@det.nsw.edu.au

Vardys Road Public School (4248)
Vardys Rd Seven Hills 2147
Ph 02 9624 3051, 02 9624 3278 Fax 02 9838 7048
Nirimba SEG P2 TP1
vardysroad-p.school@det.nsw.edu.au

Vaucluse Public School (3325)
Cambridge Ave Vaucluse 2030
Ph 02 9337 2672, 02 9337 3270 Fax 02 9337 2163
Port Jackson SEG P4 TP1
vaucluse-p.school@det.nsw.edu.au

Verona School (5583)
135B Fairfield St Fairfield East 2165
Ph 02 9721 0488 Fax 02 9721 1470
Granville SEG SSP5 TP1
verona-s.school@det.nsw.edu.au

Villawood East Public School (3977)
Lowana St Villawood 2163
Ph 02 9724 3339 Fax 02 9727 9271
Bankstown SEG P4 TP1
villawoode-p.school@det.nsw.edu.au

Villawood North Public School (4065)
Bligh St Fairfield East 2165
Ph 02 9724 1423, 02 9724 4220 Fax 02 9728 2296
Fairfield SEG P3 TP1
villawoodn-p.school@det.nsw.edu.au

Vincentia High School (8593)
The Wool Rd Vincentia 2540
Ph 02 4441 6766 Fax 02 4441 6000
Batemans Bay SEG S8 TP1
vincentia-h.school@det.nsw.edu.au

Vincentia Public School (4592)
George Caley Place Vincentia 2540
Ph 02 4441 7188 Fax 02 4441 5192
Batemans Bay SEG P3 TP1
vincentia-p.school@det.nsw.edu.au

Vineyard Public School (3329)
4 Bandon Rd Vineyard 2765
(PO Box 174 Riverstone 2765)
Ph 02 9627 1621 Fax 02 9838 1132
Hawkesbury SEG P5 TP1
vineyard-p.school@det.nsw.edu.au

Wadalba Community School (8278)
Orchid Way Wadalba 2259
(PO Box 294 Wyong 2259)
Ph 02 4392 5000 Fax 02 4392 5046
Hunter/Central Coast 2 SEG C8 TP1
wadalba-c.school@det.nsw.edu.au

Wade High School (8470)
1-39 Poole St Griffith 2680
(PO Box 5062 Griffith 2680)
Ph 02 6962 4022 Fax 02 6964 1457
Riverina West SEG S9 TP2
wade-h.school@det.nsw.edu.au

Wagga Wagga High School (8142)
Coleman St Wagga Wagga 2650
Ph 02 6925 3611 Fax 02 6925 5150
Riverina Central SEG S8 TP1
waggawagga-h.school@det.nsw.edu.au

Wagga Wagga Public School (3330)
Gurwood St Wagga Wagga 2650
Ph 02 6921 3398, 02 6921 3283 Fax 02 6921 8745
Riverina Central SEG P3 TP1
waggawagga-p.school@det.nsw.edu.au

Wahroonga Public School (3833)
71 Burns Rd Wahroonga 2076
Ph 02 9489 3086, 02 9489 4784 Fax 02 9489 7322
North Shore Network SEG P2 TP1
wahroonga-p.school@det.nsw.edu.au

Wairoa School (5631)
Brighton Blvd Bondi Beach 2026
Ph 02 9300 9579 Fax 02 9130 4867
Port Jackson SEG SSP3 TP1
wairoa-s.school@det.nsw.edu.au

Waitara Public School (3334)
Edgeworth David Ave Wahroonga 2077
Ph 02 9489 3105, 02 9487 1835 Fax 02 9489 7130
Hornsby Network SEG P2 TP1
waitara-p.school@det.nsw.edu.au

Wakefield School (5582)
School Rd Wakefield 2278
Ph 02 4953 4072 Fax 02 4953 4082
Hunter/Central Coast 4 SEG SSP5 TP1
wakefield-s.school@det.nsw.edu.au

Wakehurst Public School (4368)
Glen St Belrose 2085
Ph 02 9451 1812, 02 9451 8399 Fax 02 9975 4629
Middle Harbour Network SEG P3 TP1
wakehurst-p.school@det.nsw.edu.au

Wakool Public School (3336)
Flinders St Wakool 2710
Ph 03 5887 1126 Fax 03 5887 1291
Riverina South West SEG P5 TP4 A 8L
wakool-p.school@det.nsw.edu.au

Walbundrie Public School (3338)
Culcairn Rd Walbundrie 2642
Ph 02 6029 9004 Fax 02 6029 9002
Riverina South SEG P6 TP4 A 7
walbundrie-p.school@det.nsw.edu.au

Walcha Central School (3340)
154E North St Walcha 2354
Ph 02 6777 2777 Fax 02 6777 1009
New England Central SEG C2 TP2 A C
walcha-c.school@det.nsw.edu.au

Walgett Community College - High School (8475)
Arthur St Walgett 2832
(PO Box 228 Walgett 2832)
Ph 02 6828 1022 Fax 02 6828 1994
Bourke SEG S9 TP8 A 6HL
walgett-h.school@det.nsw.edu.au

Walgett Community College - Primary School (3342)
Warrena St Walgett 2832
Ph 02 6828 1077 Fax 02 6828 1939
Bourke SEG P4 TP8 A 6HL
walgett-p.school@det.nsw.edu.au

Walhallow Public School (3343)
Mooki River Walhallow Caroona 2343
Ph 02 6747 4717 Fax 02 6747 4800
New England South SEG P6 TP6 A 7
walhallow-p.school@det.nsw.edu.au

Walla Walla Public School (3352)
Commercial St Walla Walla 2659
Ph 02 6029 2253 Fax 02 6029 2162
Riverina South SEG P5 TP2 A 9
wallawalla-p.school@det.nsw.edu.au

Wallabadah Public School (3345)
Martyn St Wallabadah 2343
Ph 02 6746 5512 Fax 02 6746 5700
New England South SEG P5 TP2 A 9
wallabadah-p.school@det.nsw.edu.au

Wallacia Public School (3346)
171 Mulgoa Rd Wallacia 2745
Ph 02 4773 8433 Fax 02 4773 9050
Penrith Valley SEG P5 TP1
wallacia-p.school@det.nsw.edu.au

Wallendbeen Public School (3353)
King St Wallendbeen 2588
Ph 02 6943 2568 Fax 02 6943 2654
Riverina North SEG P6 TP2 A 9
wallendbee-p.school@det.nsw.edu.au

Wallerawang Public School (3354)
Barton Ave Wallerawang 2845
(PO Box 21 Wallerawang 2845)
Ph 02 6355 1210, 02 6355 1146 Fax 02 6355 7003
Bathurst SEG P4 TP2
wallerawan-p.school@det.nsw.edu.au

Wallsend Public School (3357)
Martindale St Wallsend 2287
Ph 02 4955 9415, 02 4955 9270 Fax 02 4955 8298
Hunter/Central Coast 5 SEG P4 TP1
wallsend-p.school@det.nsw.edu.au

Wallsend South Public School (3851)
Smith Rd Wallsend 2287
Ph 02 4955 9963 Fax 02 4950 2179
Hunter/Central Coast 5 SEG P2 TP1
wallsends-p.school@det.nsw.edu.au

Walters Road Public School (4310)
158 Walters Rd Blacktown 2148
Ph 02 9622 4992, 02 9622 9100 Fax 02 9831 6249
Minchinbury SEG P2 TP2
waltersrd-p.school@det.nsw.edu.au

Wambangalang Environmental Education Centre (5681)
Obley Rd Dubbo 2830
Ph 02 6887 7209 Fax 02 6887 7237
Dubbo SEG EEC2 TP2 A 6
wambangala-e.school@det.nsw.edu.au

Wamberal Public School (4522)
Lea Ave Wamberal 2260
Ph 02 4384 1111 Fax 02 4385 2478
Hunter/Central Coast 2 SEG P2 TP1
wamberal-p.school@det.nsw.edu.au

Wamoon Public School (3364)
Oxley Road Wamoon 2705
Ph 02 6955 9492 Fax 02 6955 9506
Riverina West SEG P5 TP4
wamoon-p.school@det.nsw.edu.au

Wanaaring Public School (3365)
Bourke-Milparinka Rd Wanaaring 2840
Ph 02 6874 7769 Fax 02 6874 7713
Bourke SEG P6 TP8 A 1HL
wanaaring-p.school@det.nsw.edu.au

Wangee Park School (5568)
14-16 Wangee Rd Lakemba 2195
Ph 02 9759 6796, 02 9759 6300 Fax 02 9740 4036
Strathfield SEG SSP5 TP1
wangeepark-s.school@det.nsw.edu.au

Wangi Wangi Public School (3373)
Dobell Drive Wangi Wangi 2267
Ph 02 4975 1312 Fax 02 4975 4238
Hunter/Central Coast 6 SEG P4 TP1
wangiwangi-p.school@det.nsw.edu.au

Waniora Public School (3960)
Ursula Rd Bulli 2516
(PO Box 237 Woonona 2517)
Ph 02 4284 3318 Fax 02 4284 9137
Wollongong North SEG P4 TP1
waniora-p.school@det.nsw.edu.au

Waratah Public School (3377)
Lambton Rd Waratah 2298
Ph 02 4960 1836, 02 4968 2221 Fax 02 4968 1986
Hunter/Central Coast 5 SEG P2 TP1
waratah-p.school@det.nsw.edu.au

Waratah West Public School (3932)
Leonora Pde Waratah West 2298
(Waratah 2298)
Ph 02 4968 1765 Fax 02 4960 1706
Hunter/Central Coast 5 SEG P5 TP1
waratahwst-p.school@det.nsw.edu.au

Wardell Public School (3378)
20 Richmond St Wardell 2477
Ph 02 6683 4196 Fax 02 6683 4563
Southern Cross SEG P5 TP1 A 9
wardell-p.school@det.nsw.edu.au

Warialda High School **(8519)**
Apollo Ave Warialda 2402
Ph 02 6729 1000 Fax 02 6729 1760
New England West SEG S9 TP4 A HL
warialda-h.school@det.nsw.edu.au

Warialda Public School **(3382)**
Hope St Warialda 2402
Ph 02 6729 1131 Fax 02 6729 1190
New England West SEG P4 TP4 A HL
warialda-p.school@det.nsw.edu.au

Warilla High School **(8418)**
Keross Ave Barrack Heights 2528
Ph 02 4296 3055 Fax 02 4297 2817
Shellharbour SEG S8 TP1
warilla-h.school@det.nsw.edu.au

Warilla North Public School **(4333)**
Oldfield St Warilla 2528
Ph 02 4295 1657, 02 4295 1696 Fax 02 4296 8851
Shellharbour SEG P5 TP1
warillanth-p.school@det.nsw.edu.au

Warilla Public School **(4005)**
Leawarra Ave Warilla 2528
Ph 02 4295 1867 Fax 02 4296 2417
Shellharbour SEG P3 TP1
warilla-p.school@det.nsw.edu.au

Warners Bay High School **(8440)**
1 Myles Ave Warners Bay 2282
(PO Box 215 Warners Bay 2282)
Ph 02 4954 9488 Fax 02 4956 5297
Hunter/Central Coast 7 SEG S8 TP1
warnersbay-h.school@det.nsw.edu.au

Warners Bay Public School **(3384)**
Mills St Warners Bay 2282
Ph 02 4948 8129, 02 4948 8844 Fax 02 4947 1427
Hunter/Central Coast 7 SEG P3 TP1
warnersbay-p.school@det.nsw.edu.au

Warnervale Public School **(4117)**
Lot 75 Warnervale Rd Warnervale 2259
Ph 02 4392 1358 Fax 02 4393 1647
Hunter/Central Coast 2 SEG P4 TP1
warnervale-p.school@det.nsw.edu.au

Warragamba Public School **(3744)**
Civic Centre Warragamba 2752
Ph 02 4774 1205, 02 4774 1502 Fax 02 4774 2475
Macarthur SEG P3 TP1
warragamba-p.school@det.nsw.edu.au

Warrawee Public School **(3390)**
Pacific Hwy Turramurra 2074
Ph 02 9144 2637, 02 9144 5952 Fax 02 9983 9340
North Shore Network SEG P3 TP1
warrawee-p.school@det.nsw.edu.au

Warrawong High School **(8480)**
Cowper St Warrawong 2502
Ph 02 4274 0707 Fax 02 4276 2836
Wollongong SEG S9 TP1
warrawong-h.school@det.nsw.edu.au

Warrawong Public School **(3104)**
Cowper St Warrawong 2502
(PO Box 118 Warrawong 2502)
Ph 02 4274 1399 Fax 02 4276 2789
Wollongong SEG P4 TP1
warrawong-p.school@det.nsw.edu.au

Warren Central School **(3392)**
Chester St Warren 2824
Ph 02 6847 4438 Fax 02 6847 4419
Dubbo SEG C3 TP4 A 10HL
warren-c.school@det.nsw.edu.au

Warrimoo Public School **(4195)**
Florabella St Warrimoo 2774
Ph 02 4753 6182 Fax 02 4753 6898
Blue Mountains SEG P4 TP1
warrimoo-p.school@det.nsw.edu.au

Warrumbungle National Park Environmental Education Centre **(5732)**
Warrumbungle National Park Coonabarabran 2357
(PO Box 280 Coonabarabran 2357)
Ph 02 6825 4302 Fax 02 6825 4304
Dubbo SEG EEC1 TP2 A 5HL
warrumbung-e.school@det.nsw.edu.au

Warwick Farm Public School **(3678)**
Lawrence Hargrave Rd Warwick Farm 2170
Ph 02 9602 8260, 02 9602 9797 Fax 02 9822 5156
Liverpool SEG P4 TP1
warwickfar-p.school@det.nsw.edu.au

Waterfall Public School **(3396)**
McKell Ave Waterfall 2233
Ph 02 9520 9638 Fax 02 9548 1238
Woronora River SEG P5 TP1
waterfall-p.school@det.nsw.edu.au

Wattawa Heights Public School **(4059)**
The Avenue Bankstown 2200
Ph 02 9790 3948, 02 9796 8431 Fax 02 9790 0985
Bankstown SEG P4 TP1
wattawahts-p.school@det.nsw.edu.au

Wattle Flat Public School **(3402)**
Mudgee-Bathurst Rd Wattle Flat 2795
Ph 02 6337 7088 Fax 02 6337 7037
Bathurst SEG P6 TP2 A 6C
wattleflat-p.school@det.nsw.edu.au

Wattle Grove Public School **(3871)**
Cressbrook Drive Wattle Grove 2173
Ph 02 9731 1355 Fax 02 9731 1377
Ingleburn SEG P2 TP1
wattlegrov-p.school@det.nsw.edu.au

Wauchope High School (8173)
Nelson St Wauchope 2446
Ph 02 6585 1400, 02 6585 1726 Fax 02 6585 2445
Hastings SEG S9 TP1
wauchope-h.school@det.nsw.edu.au

Wauchope Public School (3404)
Waugh St Wauchope 2446
Ph 02 6585 2277, 02 6585 2215 Fax 02 6585 2449
Hastings SEG P1 TP1
wauchope-p.school@det.nsw.edu.au

Waverley Public School (3953)
Bronte Rd Waverley 2024
Ph 02 9389 4843 Fax 02 9369 4273
Port Jackson SEG P5 TP1
waverley-p.school@det.nsw.edu.au

Wee Jasper Public School (3412)
6443 Wee Jasper Rd Wee Jasper 2582
Ph 02 6227 9652 Fax 02 6227 9617
Queanbeyan SEG P6 TP4
weejasper-p.school@det.nsw.edu.au

Wee Waa High School (8270)
Purcell Ave Wee Waa 2388
Ph 02 6795 4477 Fax 02 6795 3005
New England West SEG S9 TP4 A 10HL
weewaa-h.school@det.nsw.edu.au

Wee Waa Public School (3416)
Cowper St Wee Waa 2388
Ph 02 6795 4284 Fax 02 6795 3098
New England West SEG P4 TP4 A 10HL
weewaa-p.school@det.nsw.edu.au

Weethalle Public School (3415)
Wattle St Weethalle 2669
Ph 02 6975 6154 Fax 02 6975 6202
Riverina North West SEG P5 TP6 A 7L
weethalle-p.school@det.nsw.edu.au

Weilmoringle Public School (4305)
Burns Rd Weilmoringle 2839
Ph 02 6874 4941 Fax 02 6874 4896
Bourke SEG P6 TP8 A 1HL
weilmoring-p.school@det.nsw.edu.au

Wellington High School (8197)
Whiteley St Wellington 2820
Ph 02 6845 2344, 02 6845 2279 Fax 02 6845 1380
Dubbo SEG S9 TP2
wellington-h.school@det.nsw.edu.au

Wellington Public School (3420)
Percy St Wellington 2820
Ph 02 6845 4080 Fax 02 6845 2843
Dubbo SEG P2 TP2
wellington-p.school@det.nsw.edu.au

Wentworth Falls Public School (3422)
Falls Rd Wentworth Falls 2782
Ph 02 4757 1604, 02 4757 1696 Fax 02 4757 3927
Blue Mountains SEG P3 TP1
wentwthfal-p.school@det.nsw.edu.au

Wentworth Public School (3421)
Darling St Wentworth 2648
Ph 03 5027 3146 Fax 03 5027 3778
Broken Hill SEG P5 TP6 A 10HL
wentworth-p.school@det.nsw.edu.au

Wentworthville Public School (3423)
Cnr Station St & Fullagar Rd Wentworthville 2145
Ph 02 9631 8529, 02 9631 8492 Fax 02 9896 3079
The Hills SEG P3 TP1
wentwthvil-p.school@det.nsw.edu.au

Werrington County Public School (4541)
John Batman Ave Werrington 2747
Ph 02 9673 2100, 02 9673 2711 Fax 02 9623 1337
Penrith Valley SEG P3 TP2
werringcty-p.school@det.nsw.edu.au

Werrington Public School (4473)
Heavey St Werrington 2747
(PO Box 4100 Werrington 2747)
Ph 02 9623 7077 Fax 02 9623 1339
Penrith Valley SEG P3 TP1
werrington-p.school@det.nsw.edu.au

Werris Creek Public School (3425)
Dewhurst St Werris Creek 2341
Ph 02 6768 7065 Fax 02 6768 7732
New England South SEG P5 TP2
werriscrk-p.school@det.nsw.edu.au

WEST
Most schools whose name includes WEST are listed under the main name, eg for WEST LIVERPOOL see LIVERPOOL WEST. The exceptions are listed below.

West Pennant Hills Public School (2858)
Church St West Pennant Hills 2125
(PO Box 30 West Pennant Hills 2125)
Ph 02 9484 7400 Fax 02 9980 6424
Hills Network SEG P2 TP1
westpenhil-p.school@det.nsw.edu.au

West Pymble Public School (4283)
Apollo Ave West Pymble 2073
Ph 02 9144 7584, 02 9449 8057 Fax 02 9988 3875
North Shore Network SEG P3 TP1
westpymble-p.school@det.nsw.edu.au

West Ryde Public School (3023)
Endeavour St West Ryde 2114
Ph 02 9874 2515, 02 9874 3110 Fax 02 9804 7731
Lane Cove Network SEG P3 TP1
westryde-p.school@det.nsw.edu.au

West Wallsend High School **(8411)**
2 Appletree Rd West Wallsend 2286
Ph 02 4953 2111 Fax 02 4953 1886
Hunter/Central Coast 4 SEG S9 TP1
westwalls-h.school@det.nsw.edu.au

West Wallsend Public School **(3358)**
Brown St West Wallsend 2286
Ph 02 4953 2930, 02 4953 2992 Fax 02 4953 3131
Hunter/Central Coast 4 SEG P4 TP1
westwalls-p.school@det.nsw.edu.au

West Wyalong High School **(8392)**
30 Dumaresq St West Wyalong 2671
Ph 02 6972 2700 Fax 02 6972 2236
Riverina North West SEG S9 TP4
westwyalon-h.school@det.nsw.edu.au

West Wyalong Public School **(3519)**
Park St West Wyalong 2671
Ph 02 6972 2157 Fax 02 6972 2818
Riverina North West SEG P4 TP4
westwyalon-p.school@det.nsw.edu.au

Westdale Public School **(3428)**
Gunnedah Rd Westdale 2340
Ph 02 6760 7219 Fax 02 6760 7469
New England South SEG P3 TP1
westdale-p.school@det.nsw.edu.au

Westfields Sports High School **(8384)**
Hamilton Rd Fairfield West 2165
Ph 02 9604 3333 Fax 02 9725 4898
Fairfield SEG S8 TP1
westfields-h.school@det.nsw.edu.au

Westlawn Public School **(5238)**
North St Grafton 2460
Ph 02 6642 7466 Fax 02 6643 1679
Clarence SEG P3 TP1
westlawn-p.school@det.nsw.edu.au

Westmead Public School **(3883)**
Hawkesbury Rd Westmead 2145
Ph 02 9635 7793, 02 9635 8117 Fax 02 9687 1108
The Hills SEG P1 TP1
westmead-p.school@det.nsw.edu.au

Weston Public School **(3431)**
Sixth St Weston 2326
Ph 02 4937 1318 Fax 02 4936 1210
Hunter/Central Coast 9 SEG P4 TP1
weston-p.school@det.nsw.edu.au

Westport High School **(8554)**
Findlay Ave Port Macquarie 2444
Ph 02 6583 6400 Fax 02 6584 0335
Hastings SEG S9 TP1
westport-h.school@det.nsw.edu.au

Westport Public School **(4411)**
Widderson St Port Macquarie 2444
(PO Box 5722 Port Macquarie 2444)
Ph 02 6583 2944 Fax 02 6583 4809
Hastings SEG P3 TP1
westport-p.school@det.nsw.edu.au

Wetlands Environmental Education Centre **(5458)**
Sandgate Rd Shortland 2307
(PO Box 292 Wallsend 2287)
Ph 02 4955 8673 Fax 02 4950 0497
Hunter/Central Coast 5 SEG EEC1 TP1
wetlands-e.school@det.nsw.edu.au

Wewak Street School **(5653)**
Wewak St Albury North 2640
(PO Box 896 Lavington 2641)
Ph 02 6040 6284 Fax 02 6040 2320
Riverina South SEG SSP4 TP1
wewakst-s.school@det.nsw.edu.au

Whalan Public School **(4378)**
Karangi Rd Whalan 2770
Ph 02 9625 9437, 02 9625 9038 Fax 02 9832 2452
Mt Druitt SEG P2 TP4
whalan-p.school@det.nsw.edu.au

Wheeler Heights Public School **(4249)**
Veterans Pde Collaroy Plateau 2097
Ph 02 9971 8352, 02 9982 2475 Fax 02 9982 5617
Peninsula Network SEG P2 TP1
wheelerhts-p.school@det.nsw.edu.au

Whian Whian Public School **(2980)**
Whian Whian Rd Whian Whian 2480
Ph 02 6689 5240 Fax 02 6689 5041
The Wilson SEG P6 TP1 A 8
whianwhian-p.school@det.nsw.edu.au

White Cliffs Public School **(3435)**
Johnstone St White Cliffs 2836
Ph 08 8091 6601 Fax 08 8091 6773
Broken Hill SEG P6 TP8 A 1HL
whitecliff-p.school@det.nsw.edu.au

Whitebridge High School **(8390)**
Lonus Ave Whitebridge 2290
Ph 02 4943 3966 Fax 02 4942 2568
Hunter/Central Coast 7 SEG S8 TP1
whitebridg-h.school@det.nsw.edu.au

Whitton Public School **(3438)**
Melbergen St Whitton 2705
Ph 02 6955 2631 Fax 02 6955 2806
Riverina West SEG P5 TP4 A 8
whitton-p.school@det.nsw.edu.au

Wiangaree Public School **(3439)**
Kunghur St Wiangaree 2474
Ph 02 6636 2163 Fax 02 6636 2129
Richmond Valley SEG P6 TP1 A 8
wiangaree-p.school@det.nsw.edu.au

Widemere Public School **(4474)**
Nemesia St Greystanes 2145
Ph 02 9604 9818, 02 9604 9851 Fax 02 9725 5373
Granville SEG P4 TP1
widemere-p.school@det.nsw.edu.au

Wideview Public School **(4433)**
Wideview Rd Berowra Heights 2082
(PO Box 456 Berowra Heights 2082)
Ph 02 9456 1655 Fax 02 9456 2981
Hornsby Network SEG P3 TP1
wideview-p.school@det.nsw.edu.au

Wilberforce Public School **(3441)**
Macquarie Rd Wilberforce 2756
Ph 02 4575 1424 Fax 02 4575 1096
Hawkesbury SEG P4 TP1
wilberforc-p.school@det.nsw.edu.au

Wilcannia Central School **(3442)**
Barrier Hwy Wilcannia 2836
(PO Box 144 Wilcannia 2836)
Ph 08 8091 5801 Fax 08 8091 5026
Broken Hill SEG C4 TP8 A 2HL
wilcannia-c.school@det.nsw.edu.au

Wiley Park Girls High School **(8888)**
The Boulevarde Punchbowl 2196
Ph 02 9759 5849, 02 9750 8623 Fax 02 9740 4251
Strathfield SEG S9 TP1
wileyparkg-h.school@det.nsw.edu.au

Wiley Park Public School **(4553)**
Denman Ave Wiley Park 2195
Ph 02 9750 0144, 02 9750 0223 Fax 02 9740 4391
Strathfield SEG P2 TP1
wileypark-p.school@det.nsw.edu.au

Wilkins Public School **(4543)**
Park Rd Marrickville 2204
Ph 02 9560 3309, 02 9569 1460 Fax 02 9560 5820
Inner City SEG P3 TP1
wilkins-p.school@det.nsw.edu.au

Willans Hill School **(5550)**
Lord Baden Powell Drive Wagga Wagga 2650
(PO Box 109 Mount Austin 2650)
Ph 02 6925 1076 Fax 02 6925 3871
Riverina East SEG SSP4 TP1
willanshil-s.school@det.nsw.edu.au

Willawarrin Public School **(3445)**
Kempsey-Armidale Rd Willawarrin 2440
Ph 02 6567 1231 Fax 02 6567 1489
Hastings SEG P5 TP1 A 7
willawarri-p.school@det.nsw.edu.au

William Bayldon Public School **(4602)**
Lyons Rd Sawtell 2452
(PO Box 247 Sawtell 2452)
Ph 02 6658 2676 Fax 02 6658 2664
Coffs Harbour SEG P4 TP1
bayldon-p.school@det.nsw.edu.au

William Dean Public School **(4576)**
Yarramundi Drive Dean Park 2761
Ph 02 9626 5200, 02 9625 5744 Fax 02 9837 1151
Mt Druitt SEG P3 TP2
williamdea-p.school@det.nsw.edu.au

William Rose School **(5614)**
Cnr Morris St & Lucas Rd Seven Hills 2147
(PO Box 186 Seven Hills 1730)
Ph 02 9838 4893 Fax 02 9838 4873
Nirimba SEG SSP3 TP1
williamros-s.school@det.nsw.edu.au

William Stimson Public School **(4563)**
Lily St Wetherill Park 2164
Ph 02 9604 3822 Fax 02 9609 5497
Hoxton SEG P2 TP2
wilstimson-p.school@det.nsw.edu.au

Williamtown Public School **(3447)**
Nelson Bay Rd Williamtown 2318
Ph 02 4965 1416 Fax 02 4965 1747
Hunter/Central Coast 10 SEG P6 TP1
williamtow-p.school@det.nsw.edu.au

Willmot Public School **(4470)**
Discovery Ave Willmot 2770
Ph 02 9628 0222, 02 9628 0926 Fax 02 9628 1451
Mt Druitt SEG P4 TP4
willmot-p.school@det.nsw.edu.au

Willoughby Girls High School **(8159)**
Mowbray Rd Willoughby 2068
Ph 02 9958 4141, 02 9958 5939 Fax 02 9967 2174
Middle Harbour Network SEG S9 TP1
willoughbg-h.school@det.nsw.edu.au

Willoughby Public School **(3449)**
Oakville Rd Willoughby 2068
Ph 02 9958 1355 Fax 02 9967 2381
Middle Harbour Network SEG P1 TP1
willoughby-p.school@det.nsw.edu.au

Willow Tree Public School **(3451)**
Merriwa Rd Willow Tree 2339
Ph 02 6747 1371 Fax 02 6747 1210
New England South SEG P5 TP2 A 10
willowtree-p.school@det.nsw.edu.au

Willyama High School **(8491)**
Murton St Broken Hill 2880
Ph 08 8088 1055, 08 8088 1221 Fax 08 8087 3849
Broken Hill SEG S9 TP6 A HLY
willyama-h.school@det.nsw.edu.au

Wilson Park School **(5689)**
Wyrallah Rd Lismore 2480
Ph 02 6621 7937 Fax 02 6622 0680
The Wilson SEG SSP4 TP1
wilsonpark-s.school@det.nsw.edu.au

Wilsons Creek Public School (3454)
Wilsons Creek Rd Mullumbimby 2482
Ph 02 6684 0132 Fax 02 6684 0040
Southern Cross SEG P5 TP1 A 10
wilsonscrk-p.school@det.nsw.edu.au

Windale Public School (3893)
Kilfera St Windale 2306
Ph 02 4948 8864, 02 4948 8288 Fax 02 4948 9720
Hunter/Central Coast 7 SEG P4 TP1
windale-p.school@det.nsw.edu.au

Windang Public School (1992)
Oakland Ave Windang 2528
Ph 02 4295 1852 Fax 02 4297 2806
Shellharbour SEG P4 TP1
windang-p.school@det.nsw.edu.au

Windellama Public School (3457)
Goulburn-Windellama Rd Goulburn 2580
Ph 02 4844 5130 Fax 02 4844 5265
Queanbeyan SEG P5 TP1
windellama-p.school@det.nsw.edu.au

Windeyer Public School (3458)
Mudgee Rd Windeyer 2850
Ph 02 6373 8240 Fax 02 6373 8238
Warrumbungle SEG P6 TP4 A 5
windeyer-p.school@det.nsw.edu.au

Windsor High School (8396)
SEND ALL MAIL TO PO BOX 117 WINDSOR NSW 2758
Mulgrave & Windsor Rds McGraths Hill 2756
Ph 02 4587 7122, 02 4587 7127 Fax 02 4587 7687
Hawkesbury SEG S9 TP2
windsor-h.school@det.nsw.edu.au

Windsor Park Public School (4614)
Rifle Range Rd South Windsor 2756
Ph 02 4574 3070, 02 4574 3072 Fax 02 4574 3074
Hawkesbury SEG P3 TP1
windsorpk-p.school@det.nsw.edu.au

Windsor Public School (3459)
Dight St Windsor 2756
Ph 02 4577 3168 Fax 02 4577 2000
Hawkesbury SEG P4 TP1
windsor-p.school@det.nsw.edu.au

Windsor South Public School (4066)
Church St Windsor South 2756
Ph 02 4577 3559, 02 4577 3879 Fax 02 4577 6749
Hawkesbury SEG P4 TP1
windsorsth-p.school@det.nsw.edu.au

Wingello Public School (3461)
Murrimba Rd Wingello 2579
Ph 02 4884 4317 Fax 02 4884 4499
Goulburn/Highlands SEG P5 TP1
wingello-p.school@det.nsw.edu.au

Wingham Brush Public School (4575)
Isabella St Wingham 2429
Ph 02 6553 4443 Fax 02 6557 0322
Lower North Coast SEG P3 TP1
winghambru-p.school@det.nsw.edu.au

Wingham High School (8391)
9 Rowley St Wingham 2429
Ph 02 6553 5488 Fax 02 6557 0372
Lower North Coast SEG S9 TP1
wingham-h.school@det.nsw.edu.au

Wingham Public School (7314)
Murray Rd Wingham 2429
Ph 02 6553 4186 Fax 02 6557 0162
Lower North Coast SEG P3 TP1
wingham-p.school@det.nsw.edu.au

Winmalee High School (8573)
High School Drive Winmalee 2777
Ph 02 4754 2822 Fax 02 4754 3280
Blue Mountains SEG S8 TP1
winmalee-h.school@det.nsw.edu.au

Winmalee Public School (4436)
Leslie St Winmalee 2777
Ph 02 4754 1574, 02 4754 1534 Fax 02 4754 3410
Blue Mountains SEG P3 TP1
winmalee-p.school@det.nsw.edu.au

Winston Heights Public School (4471)
Buckley Rd Winston Hills 2153
Ph 02 9624 7485, 02 9624 7486 Fax 02 9838 8482
The Hills SEG P3 TP1
winstonhts-p.school@det.nsw.edu.au

Winston Hills Public School (4417)
Hillcrest Rd Winston Hills 2153
Ph 02 9639 8518, 02 9639 1931 Fax 02 9686 3274
The Hills SEG P2 TP1
winstonhil-p.school@det.nsw.edu.au

Wirreanda Public School (4564)
Brocklesby Rd Medowie 2318
Ph 02 4982 8707, 02 4982 8893 Fax 02 4982 8097
Hunter/Central Coast 10 SEG P2 TP1
wirreanda-p.school@det.nsw.edu.au

Wisemans Ferry Public School (3470)
Old Northern Rd Wisemans Ferry 2775
Ph 02 4566 4345 Fax 02 4566 4495
Hawkesbury SEG P5 TP1
wisemansfe-p.school@det.nsw.edu.au

Wollar Public School (3473)
Barigan St Wollar 2850
Ph 02 6373 4265 Fax 02 6373 4275
Warrumbungle SEG P6 TP6 A 4
wollar-p.school@det.nsw.edu.au

Wollombi Public School **(3474)**
Maitland Rd Wollombi 2325
Ph 02 4998 3229 Fax 02 4998 3313
Hunter/Central Coast 9 SEG P6 TP1
wollombi-p.school@det.nsw.edu.au

Wollondilly Public School **(4438)**
Newton & Hoskins Sts Goulburn 2580
Ph 02 4821 4496 Fax 02 4821 4462
Goulburn/Highlands SEG P3 TP1
wollondill-p.school@det.nsw.edu.au

Wollongbar Public School **(3475)**
Simpson Ave Wollongbar 2477
(PO Box 3455 Wollongbar 2477)
Ph 02 6628 1302 Fax 02 6628 1976
Southern Cross SEG P4 TP1
wollongbar-p.school@det.nsw.edu.au

Wollongong High School of the Performing Arts **(8143)**
Lysaght St Fairy Meadow 2519
Ph 02 4229 6844, 02 4229 6434 Fax 02 4226 4128
Wollongong North SEG S8 TP1
wollongong-h.school@det.nsw.edu.au

Wollongong Public School **(3954)**
Church St Wollongong 2500
Ph 02 4228 9120 Fax 02 4226 5091
Wollongong North SEG P4 TP1
wollongong-p.school@det.nsw.edu.au

Wollongong West Public School **(3477)**
Crown St West Wollongong 2500
Ph 02 4229 2096 Fax 02 4226 5057
Wollongong North SEG P4 TP1
wollongwst-p.school@det.nsw.edu.au

Wollumbin High School **(8596)**
North Arm Rd Murwillumbah 2484
(PO Box 101 Murwillumbah 2484)
Ph 02 6672 5121 Fax 02 6672 6056
Far North Coast SEG S9 TP1
wollumbin-h.school@det.nsw.edu.au

Wolumla Public School **(3479)**
Bega Street Wolumla 2550
Ph 02 6494 9226 Fax 02 6494 9364
Sapphire Coast/Monaro SEG P5 TP1
wolumla-p.school@det.nsw.edu.au

Wombat Public School **(3482)**
Rose St Wombat 2587
Ph 02 6384 3290 Fax 02 6384 3214
Riverina North SEG P5 TP2 A 9
wombat-p.school@det.nsw.edu.au

Wongarbon Public School **(3487)**
Railway St Wongarbon 2831
Ph 02 6887 8242 Fax 02 6887 8435
Dubbo SEG P5 TP2 A 9
wongarbon-p.school@det.nsw.edu.au

Wongwibinda Public School **(2257)**
Wongwibinda via Wollomombi 2350
Ph 02 6775 8507 Fax 02 6775 8544
New England North SEG P6 TP6 A 4
wongwibind-p.school@det.nsw.edu.au

Woniora Road School **(5609)**
83-85 Woniora Rd Hurstville 2220
Ph 02 9580 6818 Fax 02 9580 6376
Georges River SEG SSP5 TP1
woniorard-s.school@det.nsw.edu.au

Woodberry Learning Centre **(5764)**
Lawson Ave Woodberry 2322
Ph 02 4964 1473 Fax 02 4964 1563
Hunter/Central Coast 10 SEG SSP5 TP1
woodbrylc-s.school@det.nsw.edu.au

Woodberry Public School **(4459)**
Lawson Ave Woodberry 2322
Ph 02 4966 2044 Fax 02 4964 1148
Hunter/Central Coast 4 SEG P3 TP1
woodberry-p.school@det.nsw.edu.au

Woodburn Public School **(3490)**
Woodburn St Woodburn 2472
Ph 02 6682 2502, 02 6682 2503 Fax 02 6682 2513
Richmond Valley SEG P5 TP1 A 10
woodburn-p.school@det.nsw.edu.au

Woodenbong Central School **(3491)**
Unumgar St Woodenbong 2476
Ph 02 6635 1281 Fax 02 6635 1488
Richmond Valley SEG C3 TP4 A 8
woodenbong-c.school@det.nsw.edu.au

Woodford Dale Public School **(2345)**
Woodford Dale Woodford Island 2463
Ph 02 6647 6390 Fax 02 6647 6480
Clarence SEG P6 TP1 A 9
woodfordal-p.school@det.nsw.edu.au

Woodland Road Public School **(4492)**
Woodland Rd Campbelltown South 2560
Ph 02 4626 2488 Fax 02 4628 5026
Campbelltown SEG P3 TP2
woodlandrd-p.school@det.nsw.edu.au

Woodport Public School **(1857)**
The Entrance Rd Erina 2250
Ph 02 4367 7324, 02 4367 7099 Fax 02 4365 3108
Hunter/Central Coast 1 SEG P3 TP1
woodport-p.school@det.nsw.edu.au

Woodstock Public School **(3499)**
Parkes St Woodstock 2793
Ph 02 6345 0217 Fax 02 6345 0212
Lachlan SEG P6 TP2 A 8
woodstock-p.school@det.nsw.edu.au

Wooglemai Environmental Education Centre (5667)
Sheehys Creek Rd Oakdale 2570
(PO Box 78 Oakdale 2570)
Ph 02 4680 9483 Fax 02 4680 9486
Macarthur SEG EEC2 TP1
wooglemai-e.school@det.nsw.edu.au

Woolbrook Public School (3501)
Church St Woolbrook 2354
Ph 02 6777 5893 Fax 02 6777 5917
New England Central SEG P6 TP4 A 7C
woolbrook-p.school@det.nsw.edu.au

Woolgoolga High School (8548)
Centenary Drive Woolgoolga 2456
Ph 02 6654 1500 Fax 02 6654 1936
Coffs Harbour SEG S8 TP1
woolgoolga-h.school@det.nsw.edu.au

Woolgoolga Public School (3503)
Scarborough St Woolgoolga 2456
Ph 02 6654 1305 Fax 02 6654 0028
Coffs Harbour SEG P3 TP1
woolgoolga-p.school@det.nsw.edu.au

Wooli Public School (2841)
Main St Wooli 2462
Ph 02 6649 7522 Fax 02 6649 7805
Clarence SEG P5 TP1 A 4
wooli-p.school@det.nsw.edu.au

Woollahra Public School (7442)
Forth St Woollahra 2025
Ph 02 9328 6313, 02 9328 6338 Fax 02 9363 3546
Port Jackson SEG P2 TP1
woollahra-p.school@det.nsw.edu.au

Woolomin Public School (3506)
Tamworth-Nundle Rd Woolomin 2340
Ph 02 6764 2274 Fax 02 6764 2307
New England South SEG P5 TP2 A 7
woolomin-p.school@det.nsw.edu.au

Woolooware High School (8433)
Woolooware Rd North Woolooware 2230
Ph 02 9523 6752, 02 9523 9077 Fax 02 9527 3412
Port Hacking SEG S8 TP1
woolooware-h.school@det.nsw.edu.au

Woolooware Public School (3957)
Wills Rd Cronulla 2230
Ph 02 9523 5411, 02 9523 4003 Fax 02 9523 0994
Port Hacking SEG P3 TP1
woolooware-p.school@det.nsw.edu.au

Woongarrah Public School (4637)
63-73 Mataram Rd Woongarrah 2259
Ph 02 4392 7493, 02 4392 7036 Fax 02 4392 7807
Hunter/Central Coast 2 SEG P3 TP1
woongarrah-p.school@det.nsw.edu.au

Woonona East Public School (4296)
Royal Cres Woonona 2517
Ph 02 4284 1472 Fax 02 4283 2507
Wollongong North SEG P3 TP1
woononaest-p.school@det.nsw.edu.au

Woonona High School (8410)
Nicholson Lane Woonona 2517
Ph 02 4283 1623, 02 4284 1513 Fax 02 4285 1485
Wollongong North SEG S9 TP1
woonona-h.school@det.nsw.edu.au

Woonona Public School (3510)
Gray St Woonona 2517
Ph 02 4284 4316, 02 4284 3391 Fax 02 4283 4216
Wollongong North SEG P3 TP1
woonona-p.school@det.nsw.edu.au

Woronora River Public School (3735)
Prices Circuit Woronora River 2232
Ph 02 9521 3582 Fax 02 9545 1563
Woronora River SEG P5 TP1
woronorari-p.school@det.nsw.edu.au

Woy Woy Public School (7445)
Blackwall & Park Rds Woy Woy 2256
Ph 02 4341 3555 Fax 02 4344 3927
Hunter/Central Coast 3 SEG P2 TP1
woywoy-p.school@det.nsw.edu.au

Woy Woy South Public School (4329)
The School Mall Woy Woy 2256
Ph 02 4341 1899 Fax 02 4343 1984
Hunter/Central Coast 3 SEG P2 TP1
woywoysth-p.school@det.nsw.edu.au

Wyalong Public School (3518)
George Bland Ave Wyalong 2671
Ph 02 6972 2140 Fax 02 6972 2834
Riverina North West SEG P5 TP4
wyalong-p.school@det.nsw.edu.au

Wyangala Dam Public School (3521)
Waugoola Rd Wyangala Dam 2808
Ph 02 6345 0804 Fax 02 6345 0802
Lachlan SEG P6 TP2 A 7
wyangalada-p.school@det.nsw.edu.au

Wyee Public School (3522)
Wyee St Wyee 2259
Ph 02 4357 1225 Fax 02 4357 1828
Hunter/Central Coast 6 SEG P4 TP1
wyee-p.school@det.nsw.edu.au

Wyndham College (8277)
Nirimba Precinct Eastern Rd Quakers Hill 2763
Ph 02 9208 7100 Fax 02 9208 7199
Nirimba SEG S9 TP2
wyndhamcol-h.school@det.nsw.edu.au

Wyndham Public School **(3525)**
Monaro St Wyndham 2550
Ph 02 6494 2128 Fax 02 6494 2231
Sapphire Coast/Monaro SEG P5 TP4 A 8
wyndham-p.school@det.nsw.edu.au

Wyoming Public School **(4397)**
Maidens Brush Rd Wyoming 2250
Ph 02 4325 2181, 02 4324 1805 Fax 02 4323 6932
Hunter/Central Coast 2 SEG P3 TP1
wyoming-p.school@det.nsw.edu.au

Wyong Creek Public School **(3528)**
583 Yarramalong Rd Wyong Creek 2259
Ph 02 4352 1583 Fax 02 4352 1585
Hunter/Central Coast 2 SEG P5 TP1
wyongcreek-p.school@det.nsw.edu.au

Wyong Grove Public School **(4532)**
North Rd Wyong 2259
Ph 02 4352 2142 Fax 02 4351 2735
Hunter/Central Coast 2 SEG P4 TP1
wyonggrove-p.school@det.nsw.edu.au

Wyong High School **(8166)**
Alison Rd Wyong 2259
Ph 02 4353 1088, 02 4353 1221 Fax 02 4351 2591
Hunter/Central Coast 2 SEG S9 TP1
wyong-h.school@det.nsw.edu.au

Wyong Public School **(3527)**
Cutler Drive Wyong 2259
Ph 02 4352 2077, 02 4352 1301 Fax 02 4351 2885
Hunter/Central Coast 2 SEG P3 TP1
wyong-p.school@det.nsw.edu.au

Wyrallah Public School **(3529)**
Breckenridge St Wyrallah 2480
Ph 02 6629 8246 Fax 02 6629 8497
The Wilson SEG P5 TP1 A 10
wyrallah-p.school@det.nsw.edu.au

Wyrallah Road Public School **(3856)**
152 Nielson St Lismore 2480
Ph 02 6621 3363, 02 6621 4870 Fax 02 6622 2952
The Wilson SEG P2 TP1
wyrallahrd-p.school@det.nsw.edu.au

Wytaliba Public School **(4556)**
Old Grafton Rd Glen Innes 2370
Ph 02 6733 5353 Fax 02 6733 5358
New England North SEG P6 TP6 A 4
wytaliba-p.school@det.nsw.edu.au

Yagoona Public School **(3869)**
425 Hume Hwy Yagoona 2199
Ph 02 9790 3562, 02 9790 3888 Fax 02 9796 1544
Bankstown SEG P2 TP1
yagoona-p.school@det.nsw.edu.au

Yamba Public School **(3533)**
Angourie Rd Yamba 2464
Ph 02 6646 2420 Fax 02 6646 1578
Clarence SEG P3 TP1
yamba-p.school@det.nsw.edu.au

Yanco Agricultural High School **(8144)**
259 Euroley Rd Yanco 2703
(Private Mail Bag Yanco 2703)
Ph 02 6951 1500 Fax 02 6955 7180
Riverina West SEG S9 TP4
yancoag-h.school@det.nsw.edu.au

Yanco Public School **(3536)**
Main Ave Yanco 2703
Ph 02 6955 7162 Fax 02 6955 7477
Riverina West SEG P5 TP4
yanco-p.school@det.nsw.edu.au

Yanderra Public School **(3537)**
16 Yanderra Rd Yanderra 2574
Ph 02 4684 1377 Fax 02 4684 2374
Macarthur SEG P5 TP1
yanderra-p.school@det.nsw.edu.au

Yarramalong Public School **(3543)**
RMB 1320 Yarramalong Rd Wyong 2259
Ph 02 4356 1169 Fax 02 4356 1174
Hunter/Central Coast 2 SEG P6 TP1
yarramalon-p.school@det.nsw.edu.au

Yarrawarrah Public School **(4298)**
Old Bush Rd Engadine 2233
Ph 02 9520 0792 Fax 02 9548 1187
Woronora River SEG P4 TP1
yarrawarra-p.school@det.nsw.edu.au

Yarrowitch Public School **(3547)**
Chandlers Rd Yarrowitch 2354
Ph 02 6777 7582 Fax 02 6777 7411
New England Central SEG P6 TP6 A 4
yarrowitch-p.school@det.nsw.edu.au

Yass High School **(8334)**
Grampian St Yass 2582
(Locked Bag 1 Yass 2582)
Ph 02 6226 1711 Fax 02 6226 3174
Queanbeyan SEG S9 TP2
yass-h.school@det.nsw.edu.au

Yass Public School **(3549)**
Laidlaw St Yass 2582
(Locked Bag 4 Yass 2582)
Ph 02 6226 1017 Fax 02 6226 3258
Queanbeyan SEG P4 TP2
yass-p.school@det.nsw.edu.au

Yates Avenue Public School **(4157)**
Yates Ave Dundas 2117
Ph 02 9874 6302, 02 9858 4314 Fax 02 9804 6260
Cumberland SEG P3 TP1
yatesave-p.school@det.nsw.edu.au

Yenda Public School (3554)
Curran Rd Yenda 2681
(PO Box 462 Yenda 2681)
Ph 02 6968 1236 Fax 02 6968 1636
Riverina West SEG P4 TP2 A 10
yenda-p.school@det.nsw.edu.au

Yennora Public School (3986)
Ellis Pde Yennora 2161
Ph 02 9632 8660, 02 9632 5084 Fax 02 9681 1284
Fairfield SEG P5 TP1
yennora-p.school@det.nsw.edu.au

Yeo Park Infants School (5120)
Victoria St Ashfield 2131
Ph 02 9798 7560 Fax 02 9716 8006
Inner West SEG P5 TP1
yeoparkinf-p.school@det.nsw.edu.au

Yeoval Central School (3555)
Obley St Yeoval 2868
Ph 02 6846 4004 Fax 02 6846 4317
Dubbo SEG C4 TP4 A 10
yeoval-c.school@det.nsw.edu.au

Yerong Creek Public School (3556)
Cole St Yerong Creek 2642
Ph 02 6920 3521 Fax 02 6920 3559
Riverina Central SEG P5 TP2 A 10
yerongck-p.school@det.nsw.edu.au

Yetman Public School (3559)
Warialda St Yetman 2410
Ph 07 4675 3150 Fax 07 4675 3102
New England West SEG P5 TP6 A 5HL
yetman-p.school@det.nsw.edu.au

Yoogali Public School (3561)
1 East St Yoogali 2680
Ph 02 6962 4540 Fax 02 6964 1476
Riverina West SEG P5 TP2
yoogali-p.school@det.nsw.edu.au

York Public School (4482)
Evan St Penrith South 2750
Ph 02 4731 6577, 02 4731 6578 Fax 02 4721 7522
Penrith Valley SEG P3 TP1
york-p.school@det.nsw.edu.au

Young High School (8155)
Campbell St Young 2594
Ph 02 6382 1166 Fax 02 6382 1960
Riverina North SEG S9 TP2
young-h.school@det.nsw.edu.au

Young North Public School (4131)
William St Young 2594
Ph 02 6382 2579 Fax 02 6382 3002
Riverina North SEG P4 TP2
youngnorth-p.school@det.nsw.edu.au

Young Public School (3563)
Bruce St Young 2594
Ph 02 6382 2453 Fax 02 6382 4056
Riverina North SEG P2 TP2
young-p.school@det.nsw.edu.au

Yowie Bay Public School (4124)
Wonga Rd Yowie Bay 2228
Ph 02 9525 0315, 02 9525 0122 Fax 02 9540 4795
Port Hacking SEG P3 TP1
yowiebay-p.school@det.nsw.edu.au

Zig Zag Public School (3566)
23 Victoria Ave Lithgow 2790
(Lithgow 2790)
Ph 02 6351 2352 Fax 02 6353 1046
Bathurst SEG P5 TP2
zigzag-p.school@det.nsw.edu.au

If you wish to make changes to your school's entry in the alphabetical list of schools, please indicate the corrections below:

Fill in the school name and code number; then only the required change(s).

School Name _____

School Code Number _____

Please make the following changes for this school's entry:

Address _____

Postal Address _____

Telephone Number(s) _____

Fax Number(s) _____

Region/SEG _____

Your Name _____

Position _____

If you have any other corrections to make to the Directory, please indicate them below:

_____

_____

_____

_____

If you have any suggested improvements – details you would like to see added or omitted from the Directory, as general information or as part of the alphabetical list of schools – please indicate below:

_____

_____

_____

Please send this page by:

email: **datacollections@det.nsw.edu.au**
or fax: **02 9561 8055**

Schools Data Officer
Data Collections Unit
Planning and Innovation Directorate
NSW Department of Education and Training
GPO Box 33 Sydney 2001

Copyright © 2008

© The State of New South Wales, Department of Education and Training 2008

ISSN 1832-5718

Edited by

Corporate Marketing Directorate and Planning and Innovation Directorate

GPO Box 33, Sydney 2001

Telephone 02 9561 8041 Fax 02 9561 8213

Email: directory@det.nsw.edu.au